[図1]

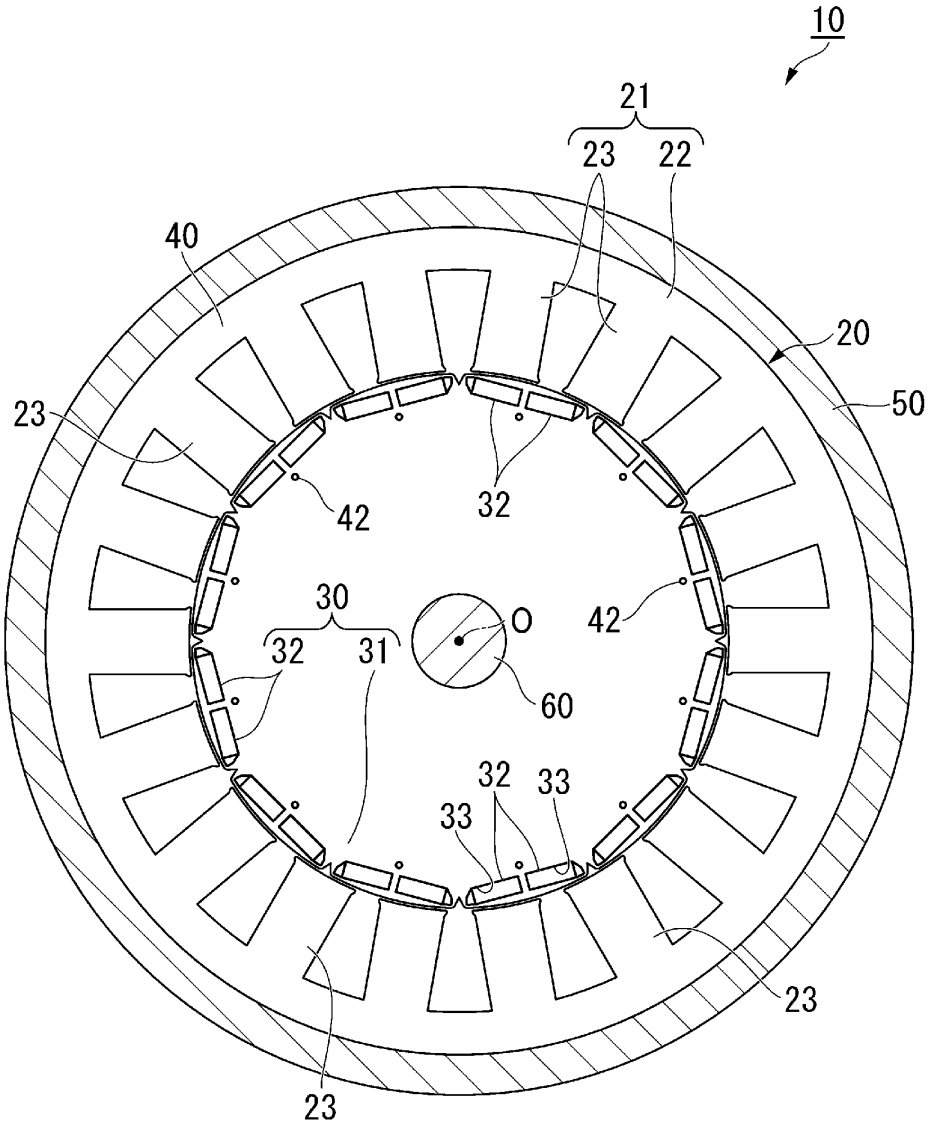

[図2]

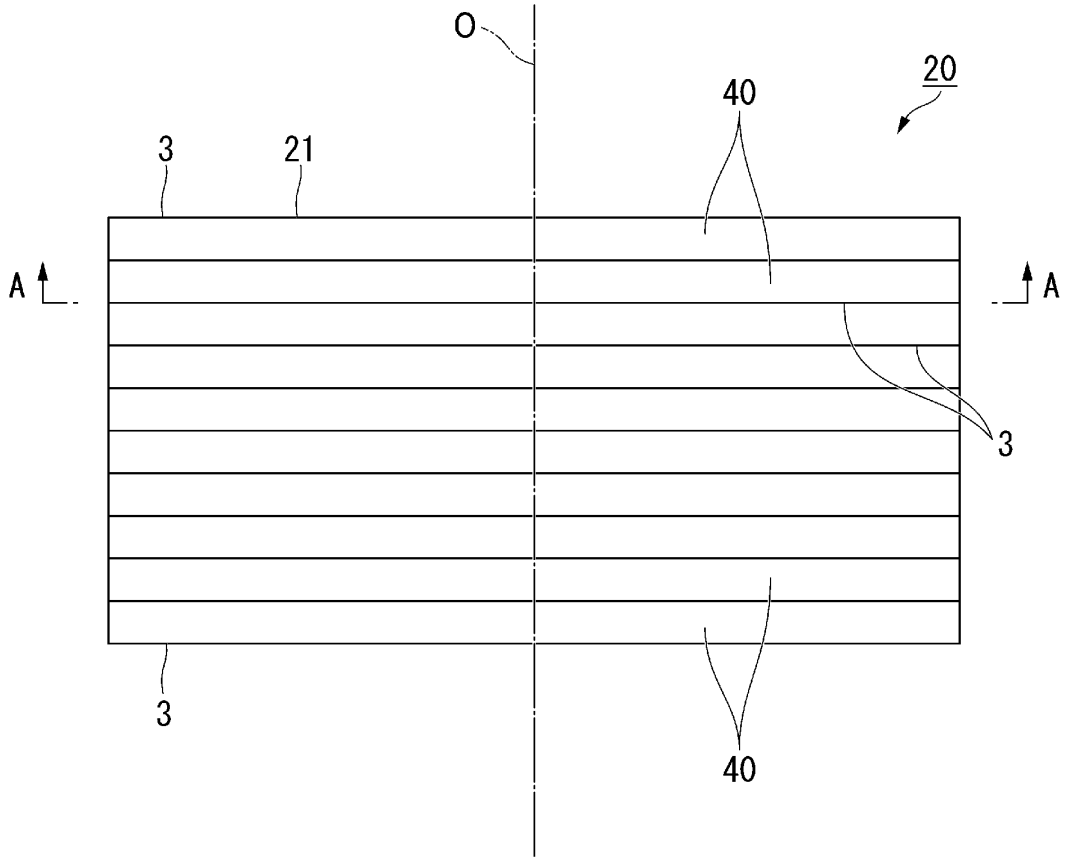

[図3]

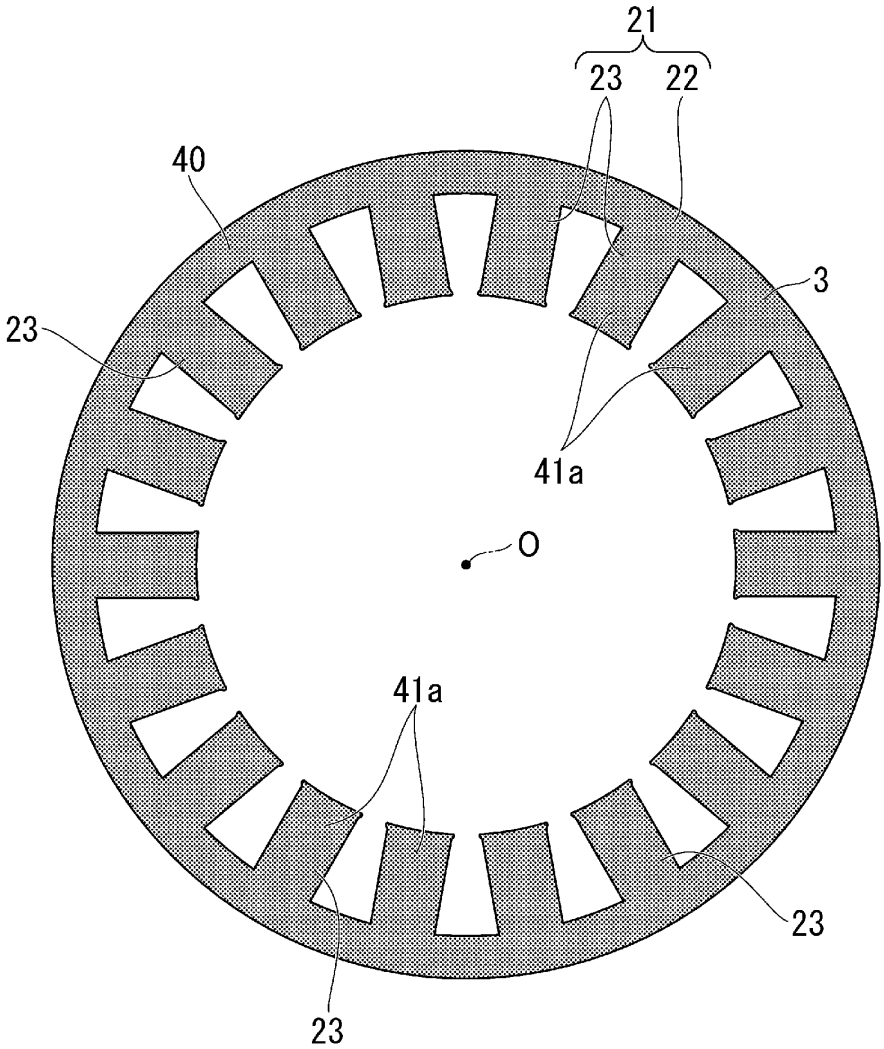

[図4]

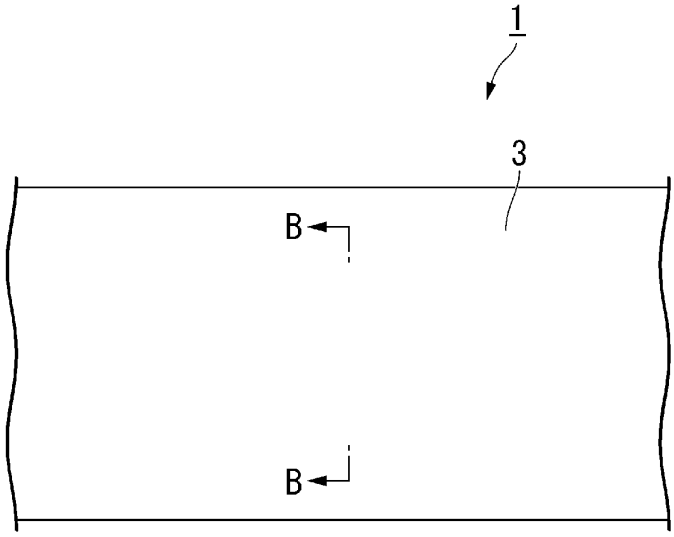

[図5]

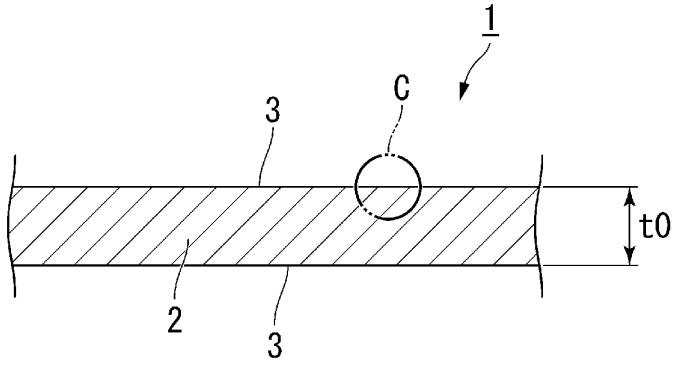

[図6]

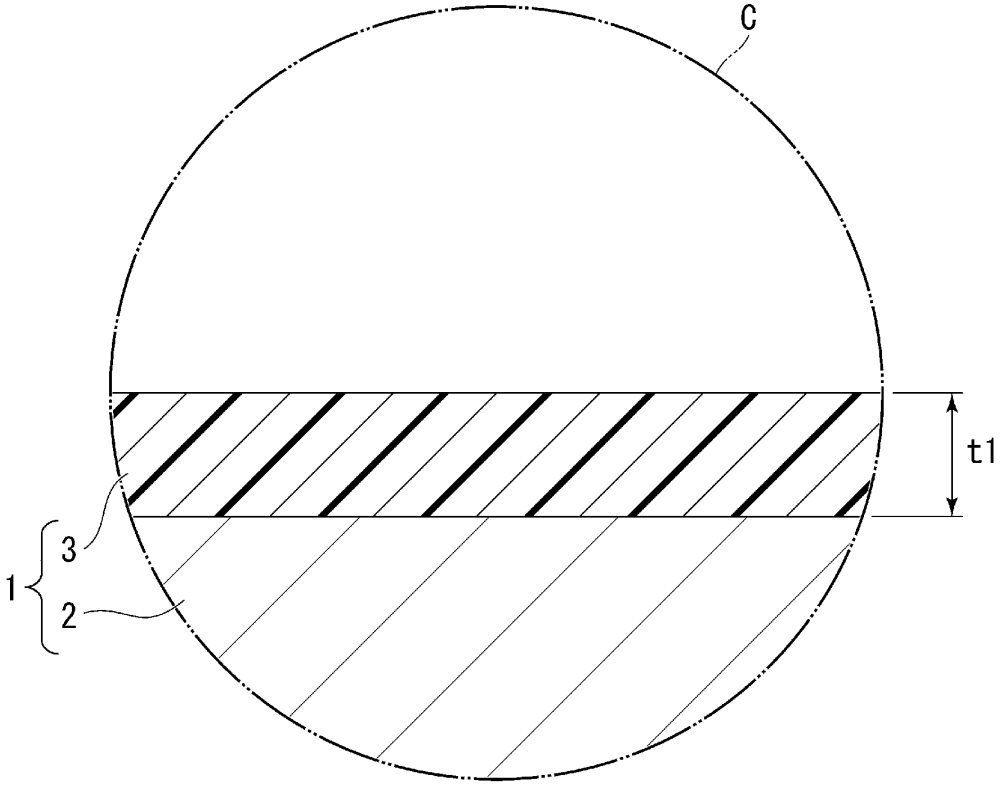

[図7]

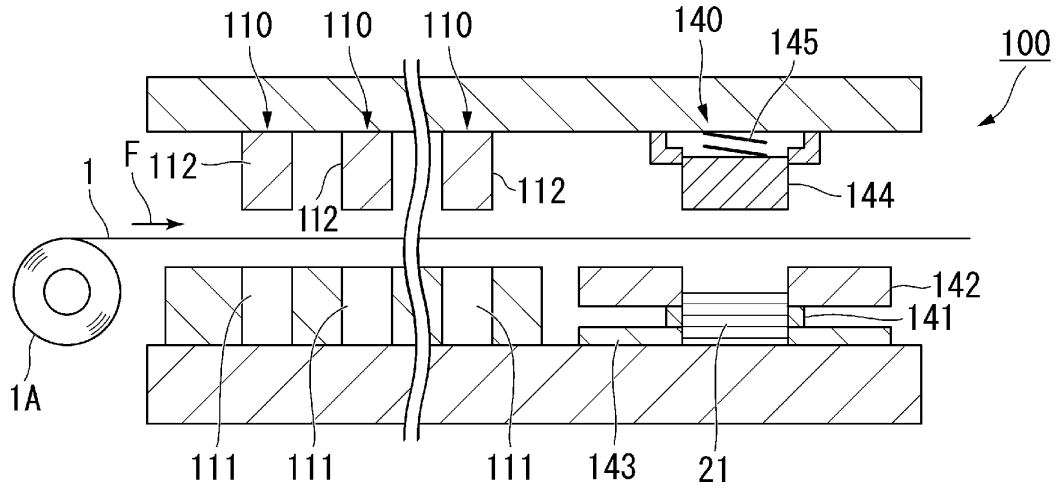
110
110
110
140
145
100
F
112
112
112
144
1
142
141
1A
111
111
111
143
21

[図8]

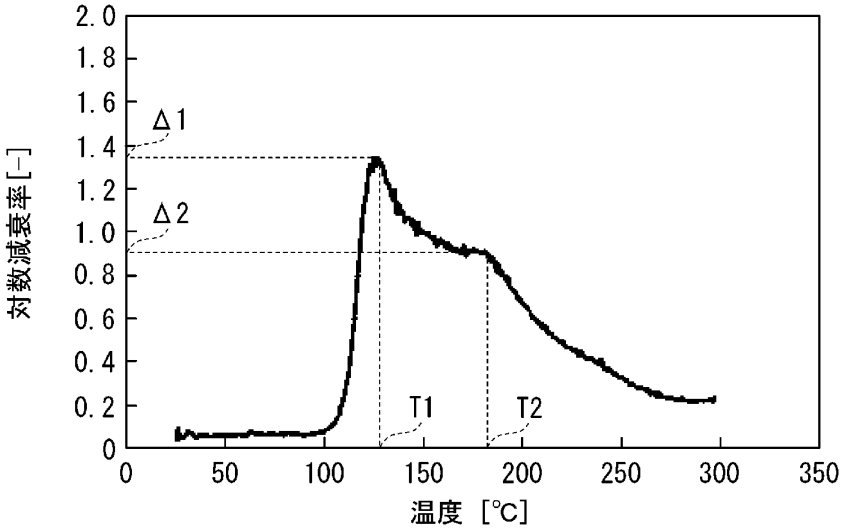
2.0
1.8
1.6
1.4
1.2
1.0
0.8
0.6
0.4
0.2
0
Δ1
Δ2
T1
T2
対数減衰率[-]
0
50
100
150
200
250
300
350
温度 [℃]