Fig. 2

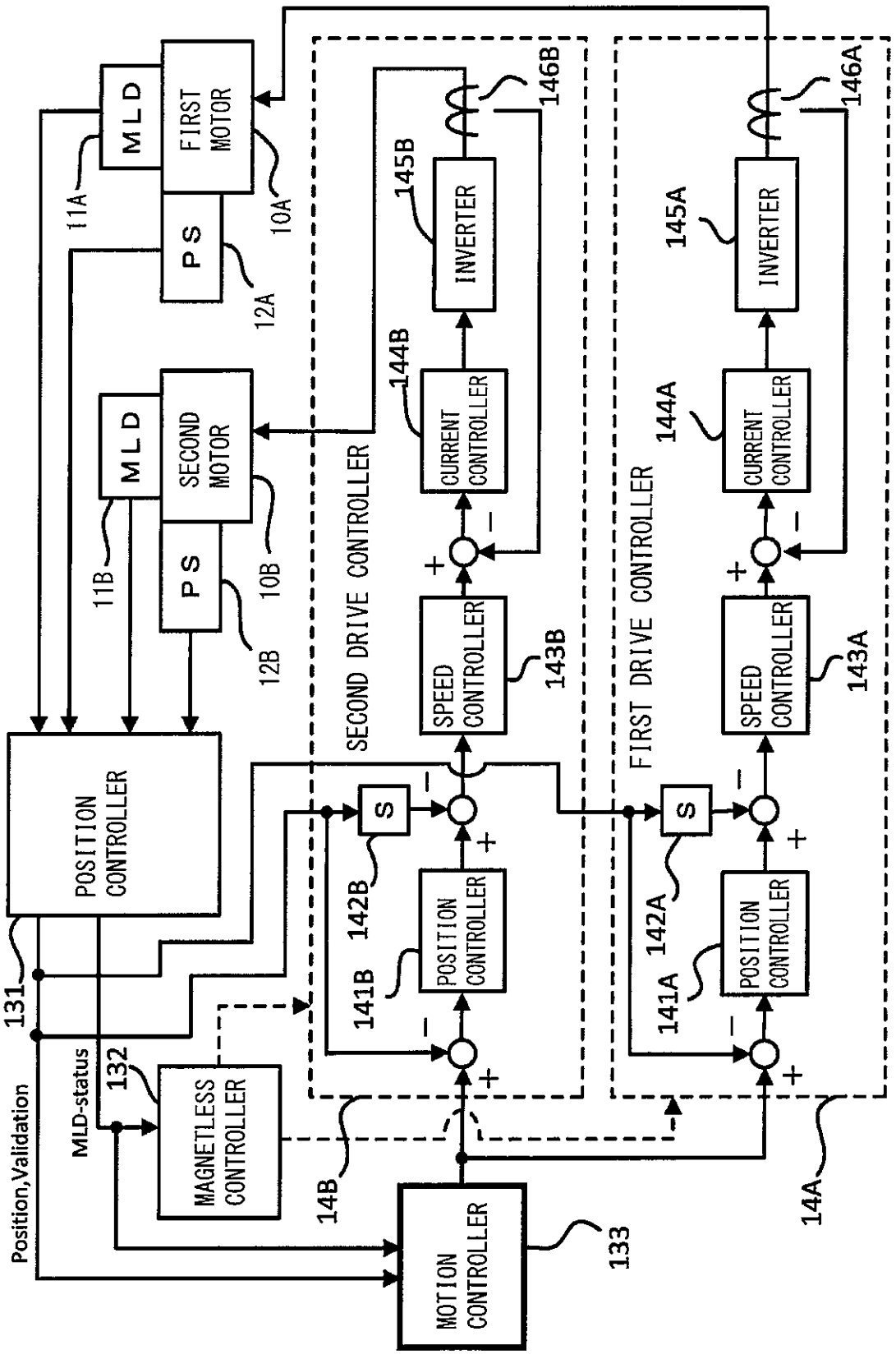
MLD
FIRST MOTOR
PS
11A
10A
12A
MLD
SECOND MOTOR
PS
11B
10B
12B
POSITION CONTROLLER
131
MLD-status
132
MAGNETLESS CONTROLLER
Position,Validation
MOTION CONTROLLER
133
14B
14A
SECOND DRIVE CONTROLLER
FIRST DRIVE CONTROLLER
S
142B
141B
142A
141A
POSITION CONTROLLER
SPEED CONTROLLER
143B
143A
CURRENT CONTROLLER
144B
144A
INVERTER
145B
145A
146B
146A

Fig. 11

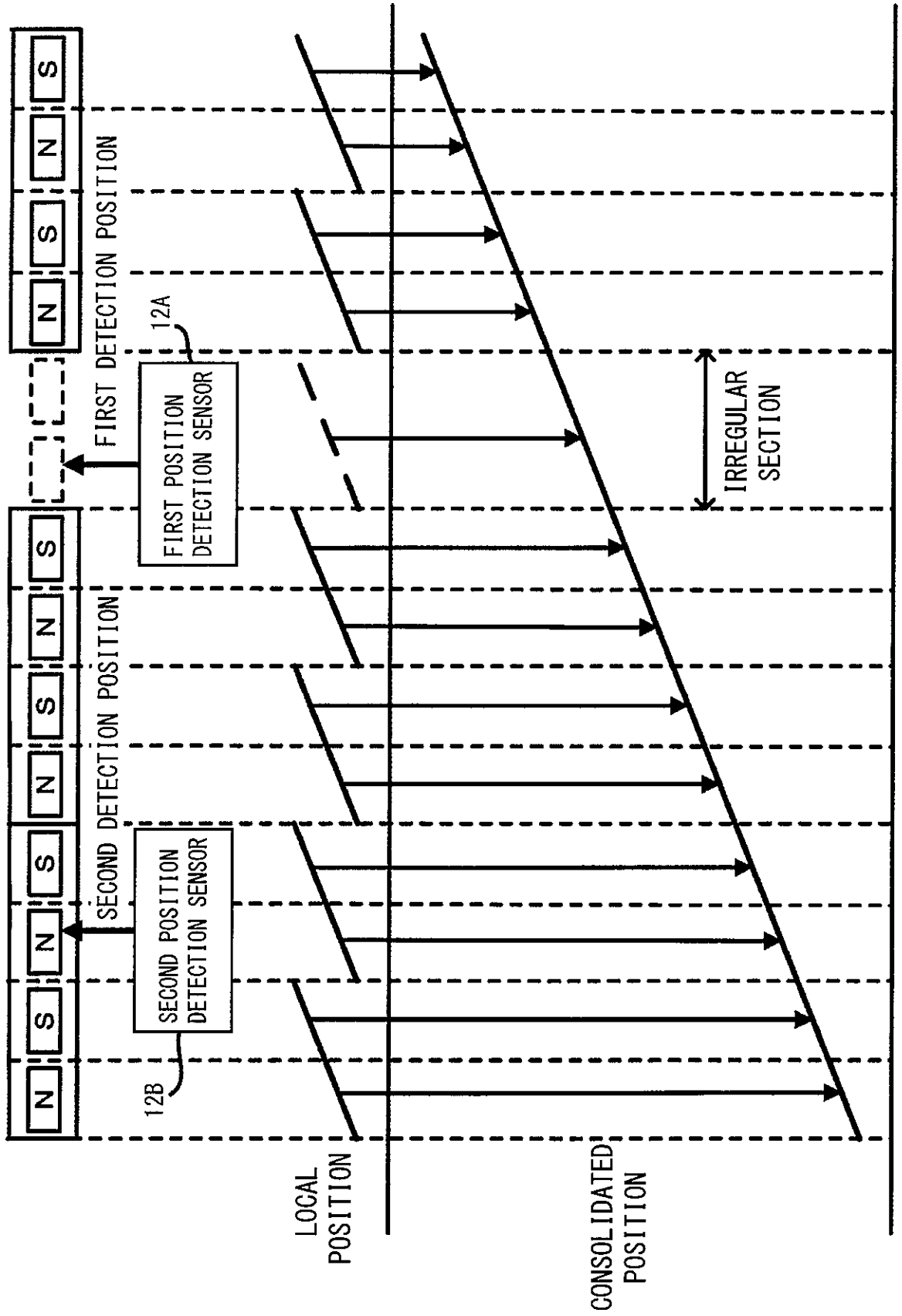
S
N
S
N
FIRST DETECTION POSITION
12A
FIRST POSITION DETECTION SENSOR
IRREGULAR SECTION
S
N
S
N
SECOND DETECTION POSITION
SECOND POSITION DETECTION SENSOR
12B
N
S
N
S
LOCAL POSITION
CONSOLIDATED POSITION