(12) INTERNATIONAL APPLICATION PUBLISHED UNDER THE PATENT COOPERATION TREATY (PCT)

(19) World Intellectual Property Organization
International Bureau

(43) International Publication Date
18 September 2025 (18.09.2025)

WIPO | PCT

(10) International Publication Number
WO 2025/193657 A1

(51) International Patent Classification:
A47J 31/44 (2006.01) *A47J 31/52* (2006.01)

(21) International Application Number:
PCT/US2025/019302

(22) International Filing Date:
11 March 2025 (11.03.2025)

(25) Filing Language: English

(26) Publication Language: English

(30) Priority Data:
63/564,301 12 March 2024 (12.03.2024) US
63/565,828 15 March 2024 (15.03.2024) US

(71) Applicant: **KEURIG GREEN MOUNTAIN, INC.** [US/US]; 53 South Avenue, Burlington, MA 01803 (US).

(72) Inventors: **CASSANO, Robert Dana**; 53 South Avenue, Burlington, MA 01803 (US). **DECATALDO, Charles Anthony**; 53 South Avenue, Burlington, MA 01803 (US). **IOANNIDIS, Nicholas George**; 53 South Avenue, Burlington, MA 01803 (US). **LAM, Johnathan**; 53 South Avenue, Burlington, MA 01803 (US).

(74) Agent: **WANG, Jennifer J.** et al.; Wolf, Greenfield & Sacks, P.C., 600 Atlantic Avenue, Boston, MA 02210-2206 (US).

(81) Designated States *(unless otherwise indicated, for every kind of national protection available)*: AE, AG, AL, AM, AO, AT, AU, AZ, BA, BB, BG, BH, BN, BR, BW, BY, BZ, CA, CH, CL, CN, CO, CR, CU, CV, CZ, DE, DJ, DK, DM, DO, DZ, EC, EE, EG, ES, FI, GB, GD, GE, GH, GM, GT, HN, HR, HU, ID, IL, IN, IQ, IR, IS, IT, JM, JO, JP, KE, KG, KH, KN, KP, KR, KW, KZ, LA, LC, LK, LR, LS, LU, LY, MA, MD, MG, MK, MN, MU, MW, MX, MY, MZ, NA, NG, NI, NO, NZ, OM, PA, PE, PG, PH, PL, PT, QA, RO, RS, RU, RW, SA, SC, SD, SE, SG, SK, SL, ST, SV, SY, TH, TJ, TM, TN, TR, TT, TZ, UA, UG, US, UY, UZ, VC, VN, WS, ZA, ZM, ZW.

(84) Designated States *(unless otherwise indicated, for every kind of regional protection available)*: ARIPO (BW, CV, GH, GM, KE, LR, LS, MW, MZ, NA, RW, SC, SD, SL, ST, SZ, TZ, UG, ZM, ZW), Eurasian (AM, AZ, BY, KG, KZ, RU, TJ, TM), European (AL, AT, BE, BG, CH, CY, CZ, DE, DK, EE, ES, FI, FR, GB, GR, HR, HU, IE, IS, IT, LT, LU, LV, MC, ME, MK, MT, NL, NO, PL, PT, RO, RS, SE,

(54) Title: BEVERAGE MACHINE WITH BEVERAGE TABLET SIZE DETECTION

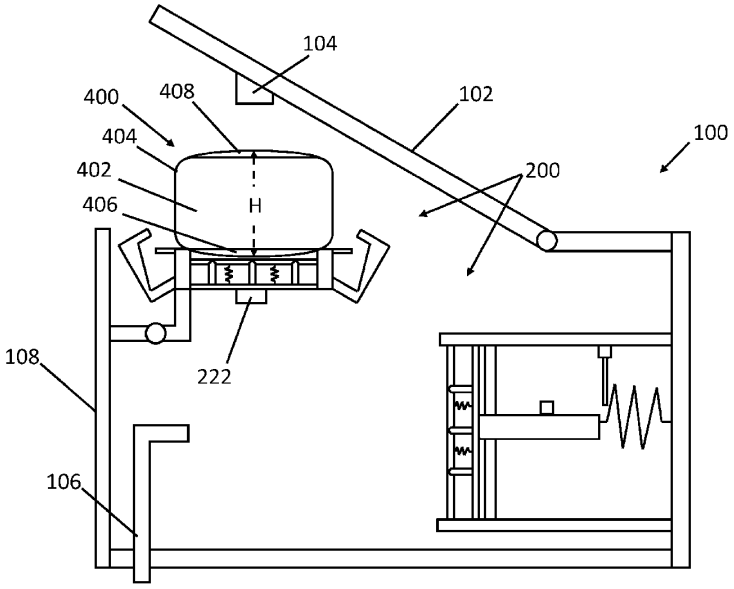

FIG. 1

(57) Abstract: A beverage machine is provided, where the beverage machine may, in some embodiments, be configured to have a brew chamber configured for receiving beverage tablets. The beverage machine may include a sensor configured to detect a size of a beverage tablet in the brew chamber based on a physical dimension of the beverage tablet.

WO 2025/193657 A1

[Continued on next page]

SI, SK, SM, TR), OAPI (BF, BJ, CF, CG, CI, CM, GA, GN, GQ, GW, KM, ML, MR, NE, SN, TD, TG).

Published:
— *with international search report (Art. 21(3))*