(12) INTERNATIONAL APPLICATION PUBLISHED UNDER THE PATENT COOPERATION TREATY (PCT)

(19) World Intellectual Property Organization
International Bureau

(43) International Publication Date
31 August 2006 (31.08.2006)

PCT

(10) International Publication Number
WO 2006/090118 A1

(51) International Patent Classification:
A61M 5/32 (2006.01)

(21) International Application Number:
PCT/GB2006/000528

(22) International Filing Date:
15 February 2006 (15.02.2006)

(25) Filing Language: English

(26) Publication Language: English

(30) Priority Data:
0504130.6 25 February 2005 (25.02.2005) GB
0506431.6 30 March 2005 (30.03.2005) GB

(71) Applicant *(for all designated States except US)*: **SALVUS TECHNOLOGY LIMITED** [GB/GB]; The Old Chemist Shop, Stradbroke, Suffolk IP21 5HS (GB).

(72) Inventors; and
(75) Inventors/Applicants *(for US only)*: **WESTON, Terence, Edward** [GB/GB]; Swannington Hall, Church Lane, Swannington, Norfolk NR9 5NP (GB). **EMMOTT, Douglas, Arthur** [GB/GB]; Pump House, High Road, Swilland, Ipswich, Sufflok IP6 9LR (GB).

(74) Agent: **ELKINGTON AND FIFE LLP**; Prospect House, 8 Pembroke Road, Sevenoaks, Kent TN13 1XR (GB).

(81) Designated States *(unless otherwise indicated, for every kind of national protection available)*: AE, AG, AL, AM, AT, AU, AZ, BA, BB, BG, BR, BW, BY, BZ, CA, CH, CN, CO, CR, CU, CZ, DE, DK, DM, DZ, EC, EE, EG, ES, FI, GB, GD, GE, GH, GM, HR, HU, ID, IL, IN, IS, JP, KE, KG, KM, KN, KP, KR, KZ, LC, LK, LR, LS, LT, LU, LV, LY, MA, MD, MG, MK, MN, MW, MX, MZ, NA, NG, NI, NO, NZ, OM, PG, PH, PL, PT, RO, RU, SC, SD, SE, SG, SK, SL, SM, SY, TJ, TM, TN, TR, TT, TZ, UA, UG, US, UZ, VC, VN, YU, ZA, ZM, ZW.

(84) Designated States *(unless otherwise indicated, for every kind of regional protection available)*: ARIPO (BW, GH, GM, KE, LS, MW, MZ, NA, SD, SL, SZ, TZ, UG, ZM, ZW), Eurasian (AM, AZ, BY, KG, KZ, MD, RU, TJ, TM), European (AT, BE, BG, CH, CY, CZ, DE, DK, EE, ES, FI, FR, GB, GR, HU, IE, IS, IT, LT, LU, LV, MC, NL, PL, PT, RO, SE, SI, SK, TR), OAPI (BF, BJ, CF, CG, CI, CM, GA, GN, GQ, GW, ML, MR, NE, SN, TD, TG).

Published:
— *with international search report*

For two-letter codes and other abbreviations, refer to the "Guidance Notes on Codes and Abbreviations" appearing at the beginning of each regular issue of the PCT Gazette.

(54) **Title:** SAFETY NEEDLE ACCESSORY

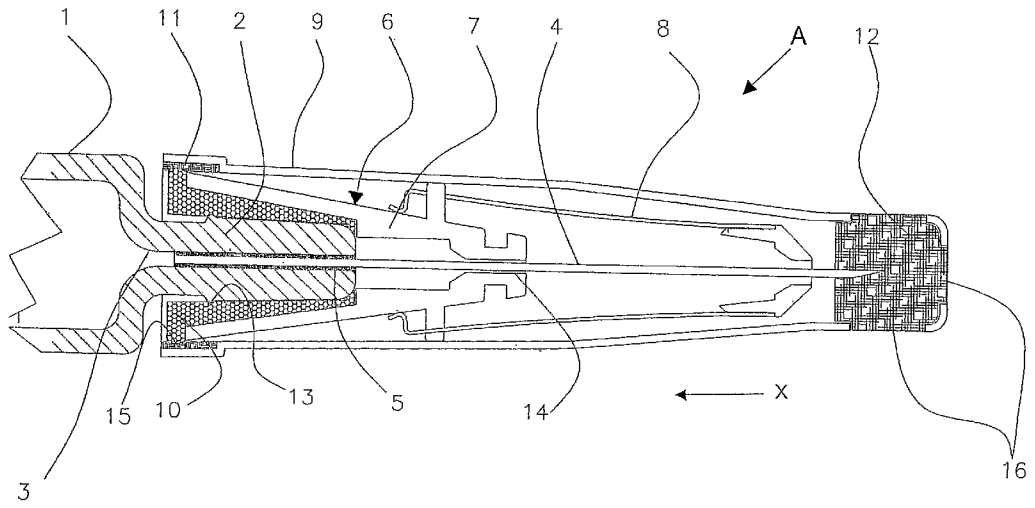

(57) **Abstract:** This invention relates to a safety needle accessory sealed within a pack suitable for sealing pre-filled syringes. The safety needle accessory comprises a hub (7) for surrounding a hollow needle (4) having a tip and having a connector for attachment to a syringe, a slidable sleeve (8) adapted to slide over the needle in a first longitudinal direction from a first position in which the needle is fully or partially covered by the sleeve to a second position in which the needle is exposed, and in a second longitudinal direction from the second position to a third position in which the needle is fully covered by the sleeve, and a pack (9) surrounding the hollow needle, hub and slidable sleeve having a closed end covering the needle and an open end exposing the connector of the hub. The safety needle accessory further comprises a first seal (10) attached to the connector of the hub and a second seal (11) between the hub and the pack.

WO 2006/090118 A1