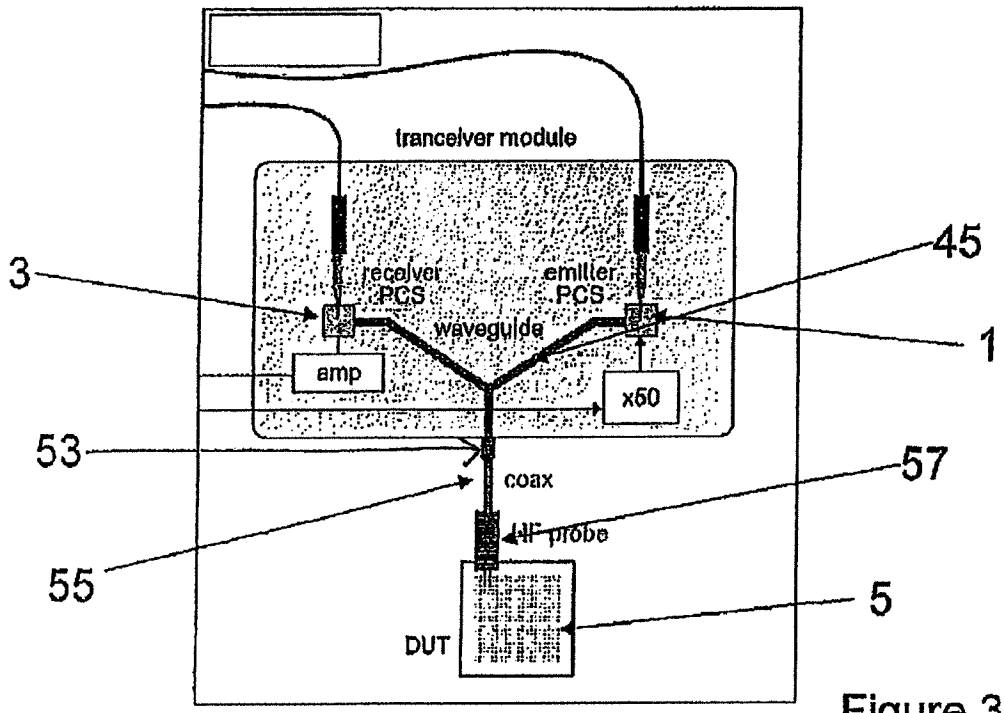

Figure 3

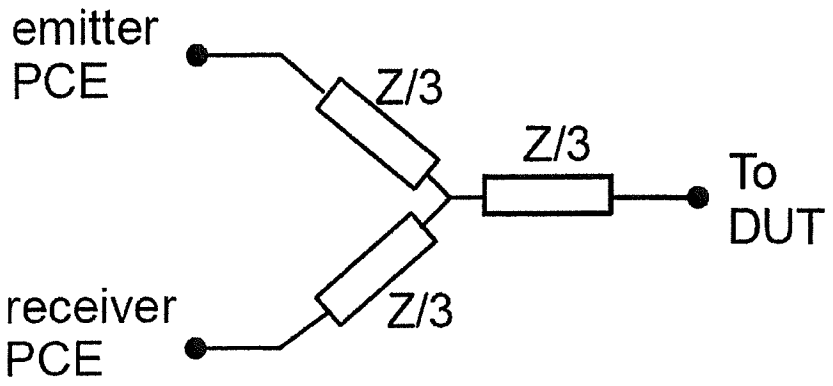

Figure 3a

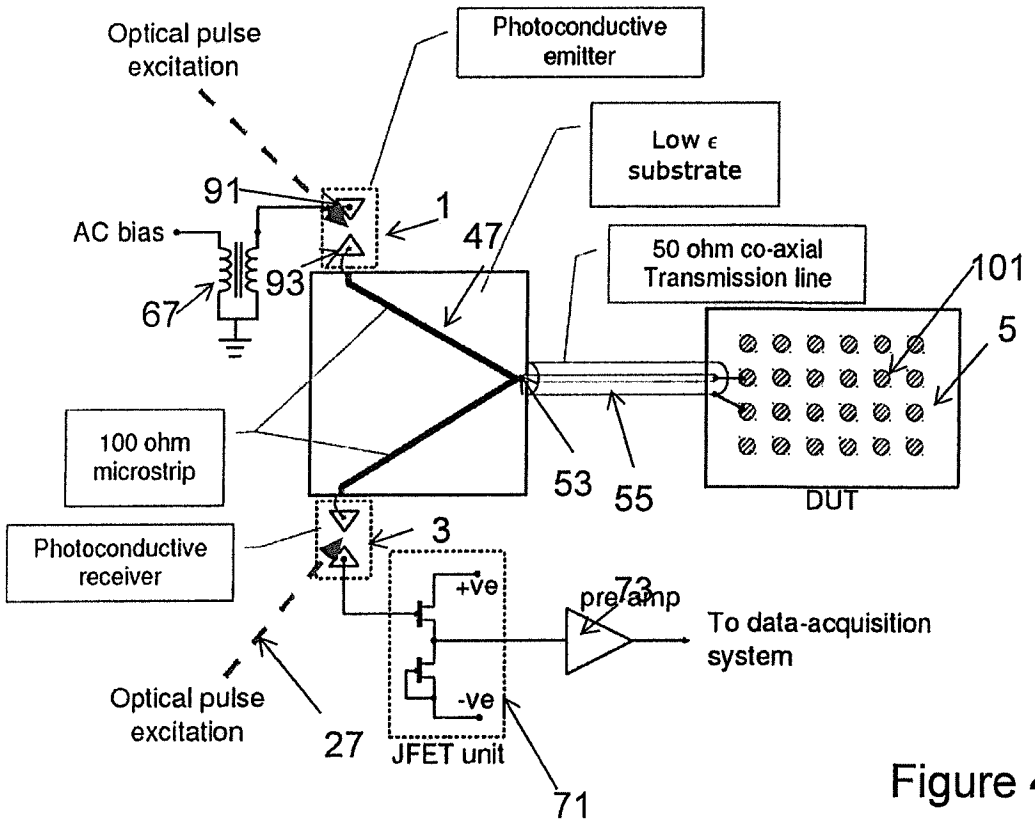
Optical pulse excitation
Photoconductive emitter
Low ϵ substrate
91
1
47
AC bias
93
67
50 ohm co-axial Transmission line
101
5
100 ohm microstrip
53
55
DUT
Photoconductive receiver
3
+ve
73
pre-amp
To data-acquisition system
-ve
Optical pulse excitation
27
JFET unit
71

Figure 4

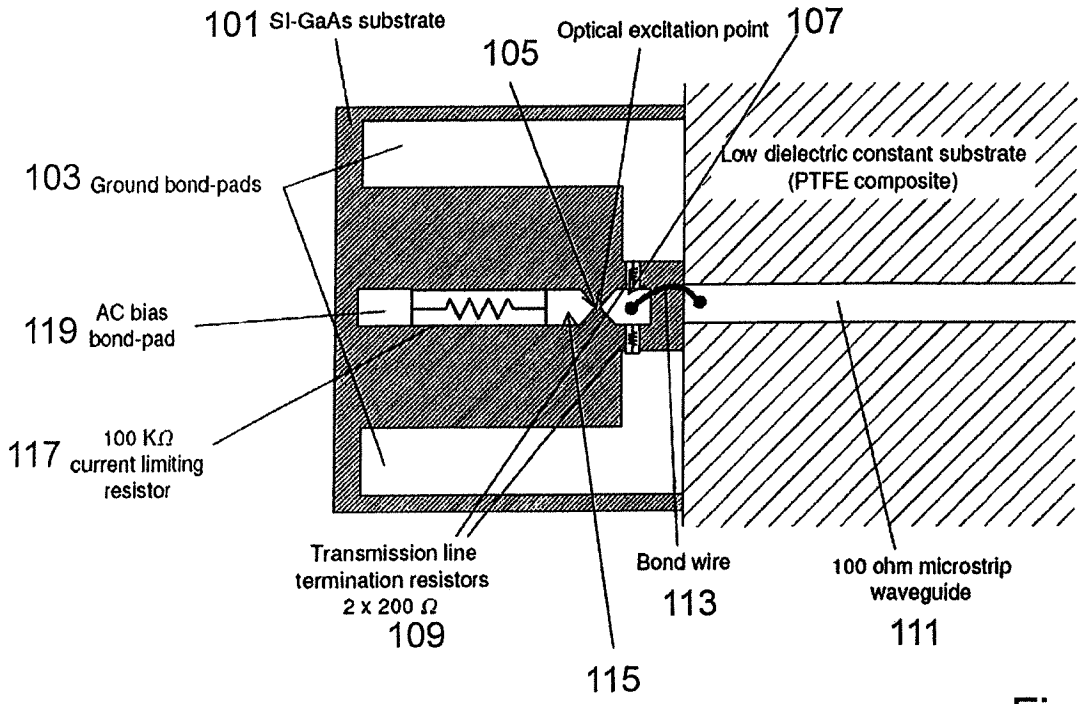

Figure 5

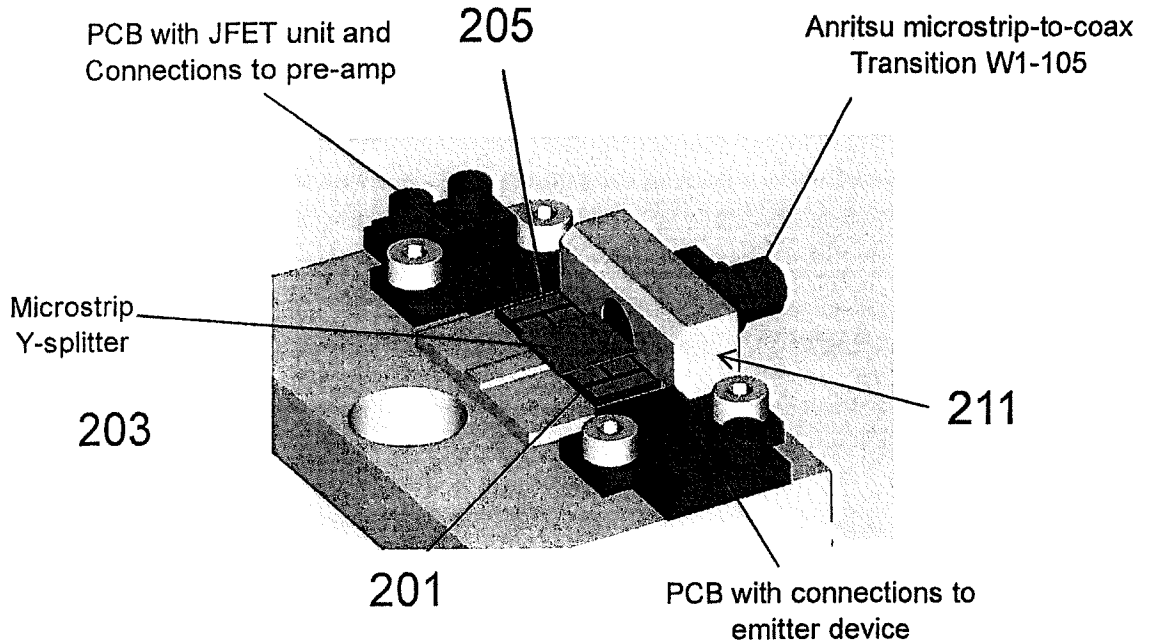

Figure 6

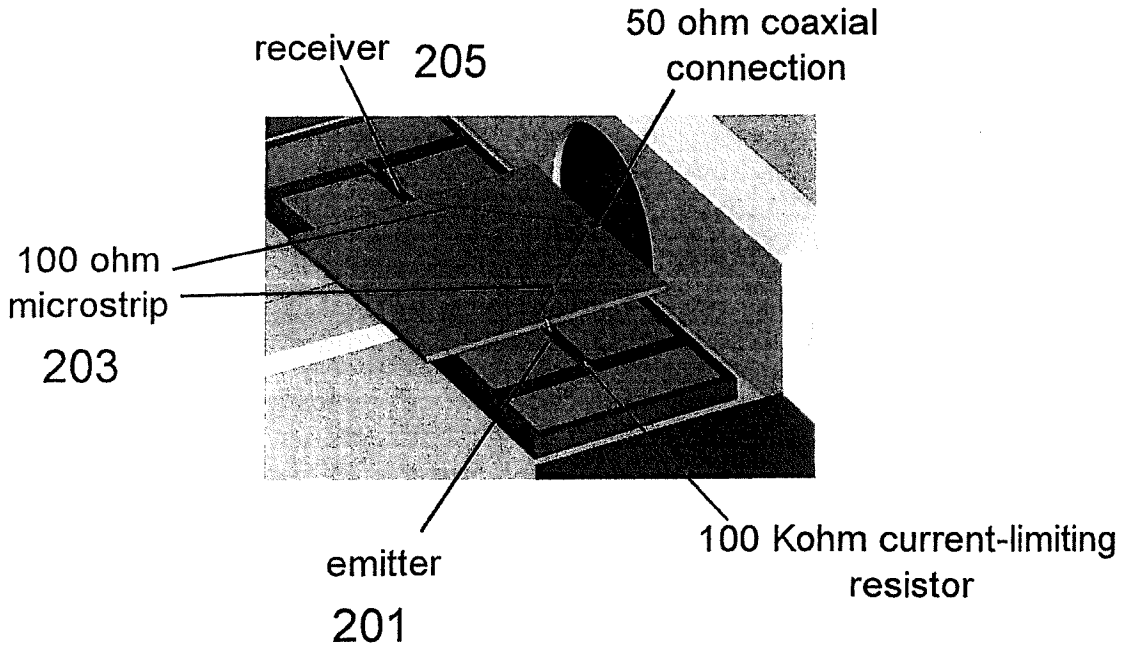

Figure 7

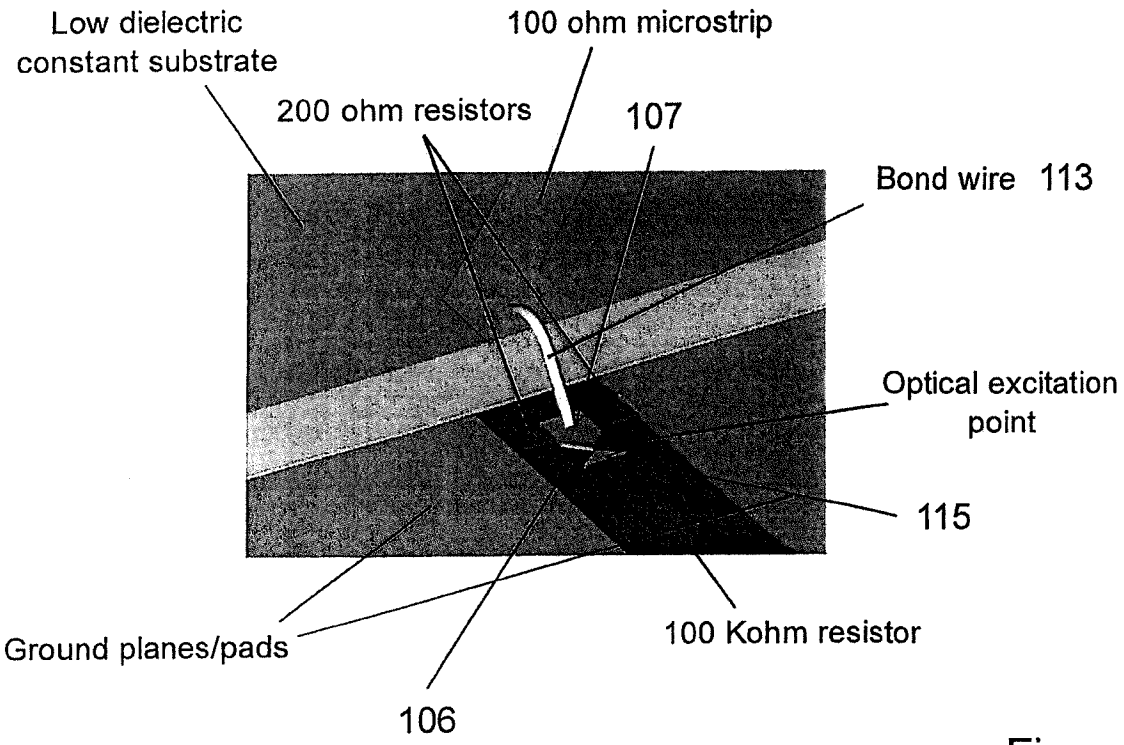

Figure 8

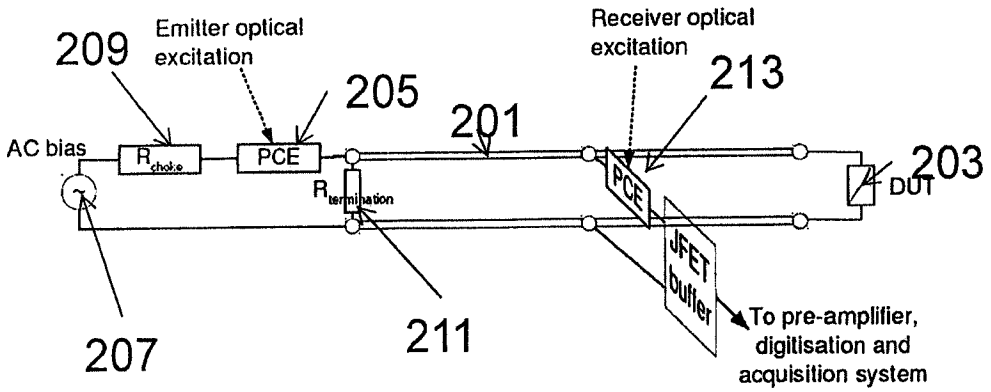

Figure 9

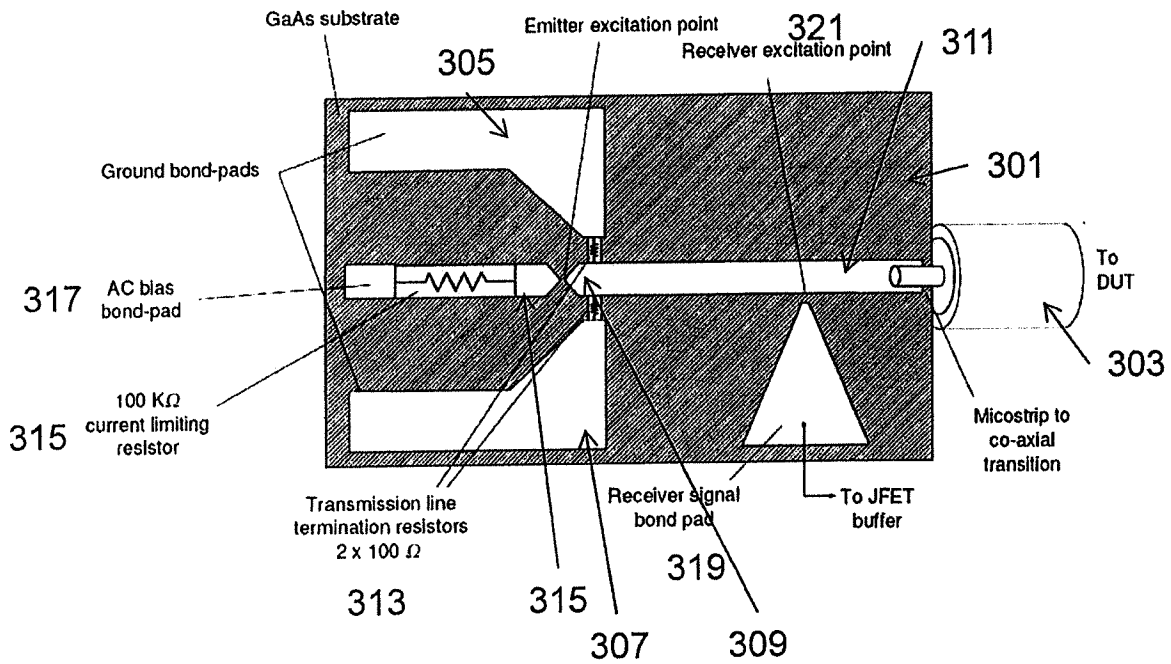

Figure 10

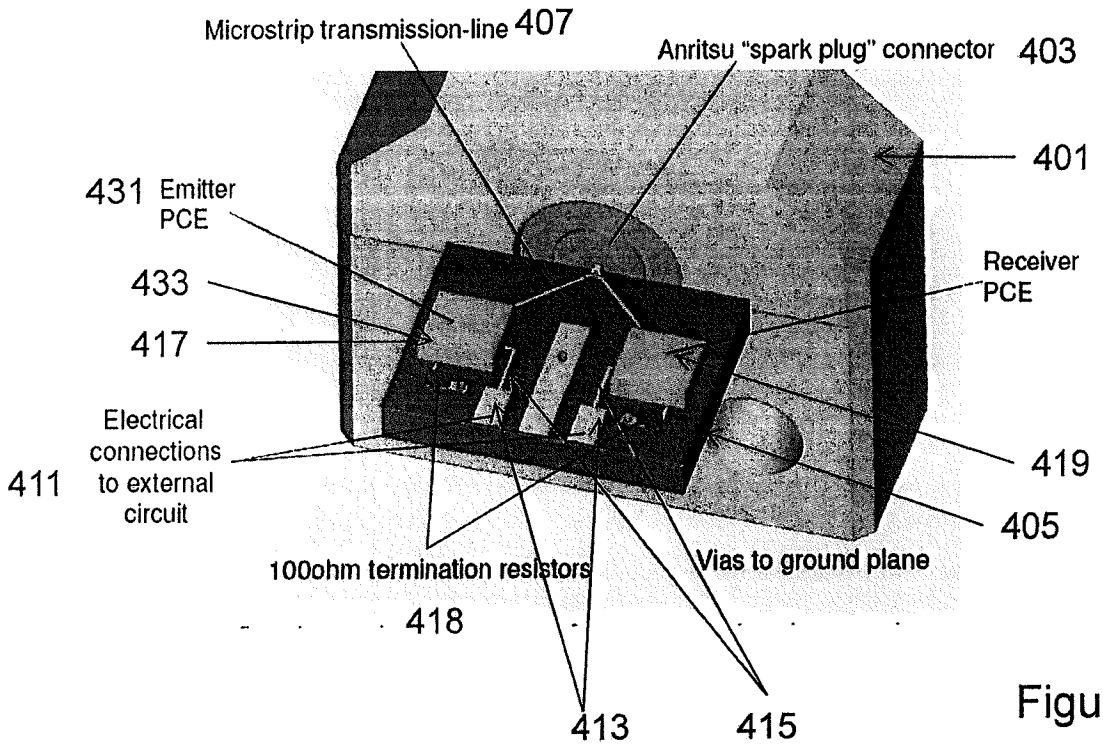

Figure 11

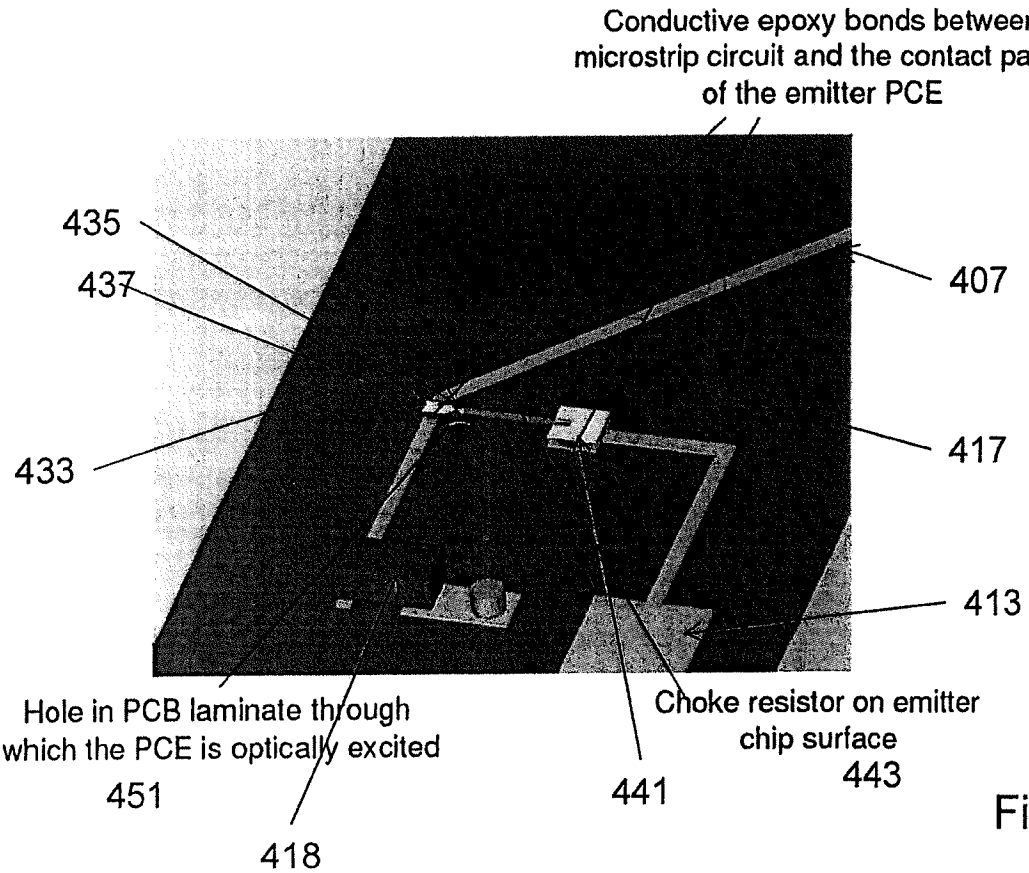

Figure 12

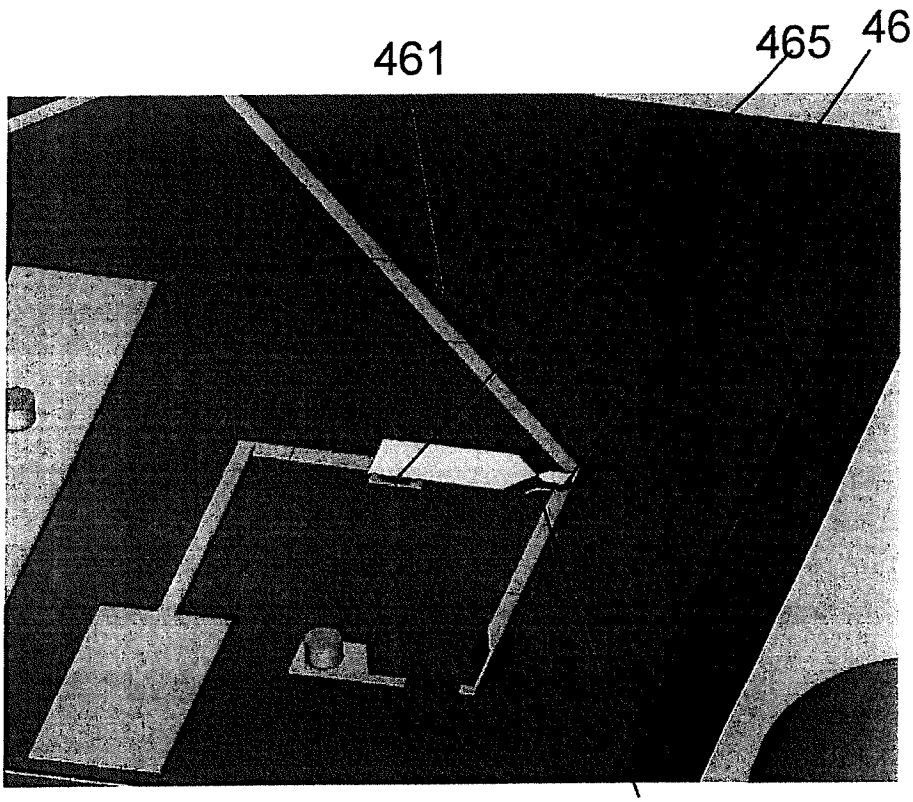

Figure 13

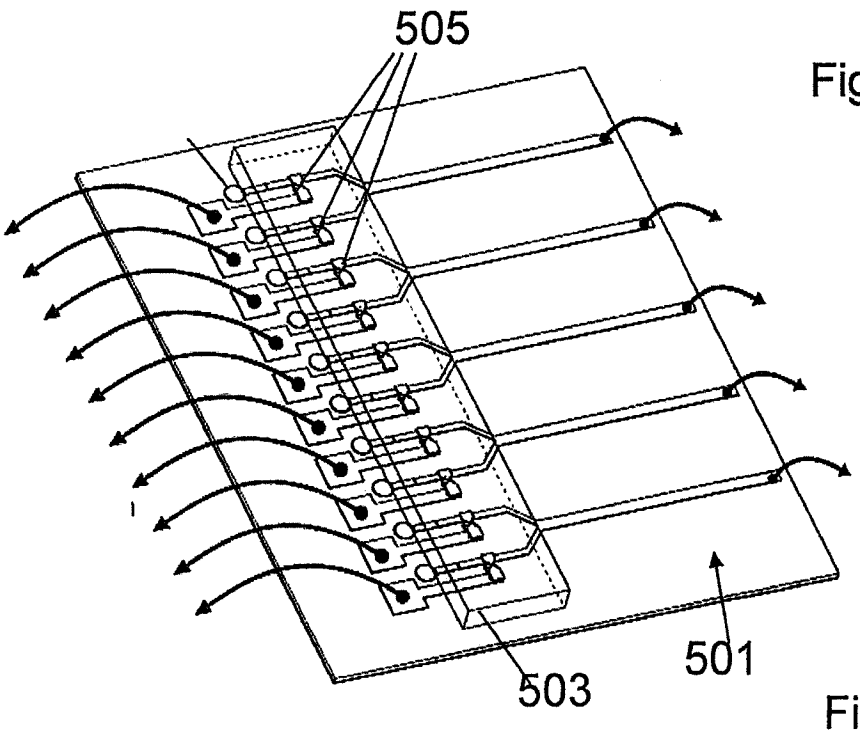

Figure 14

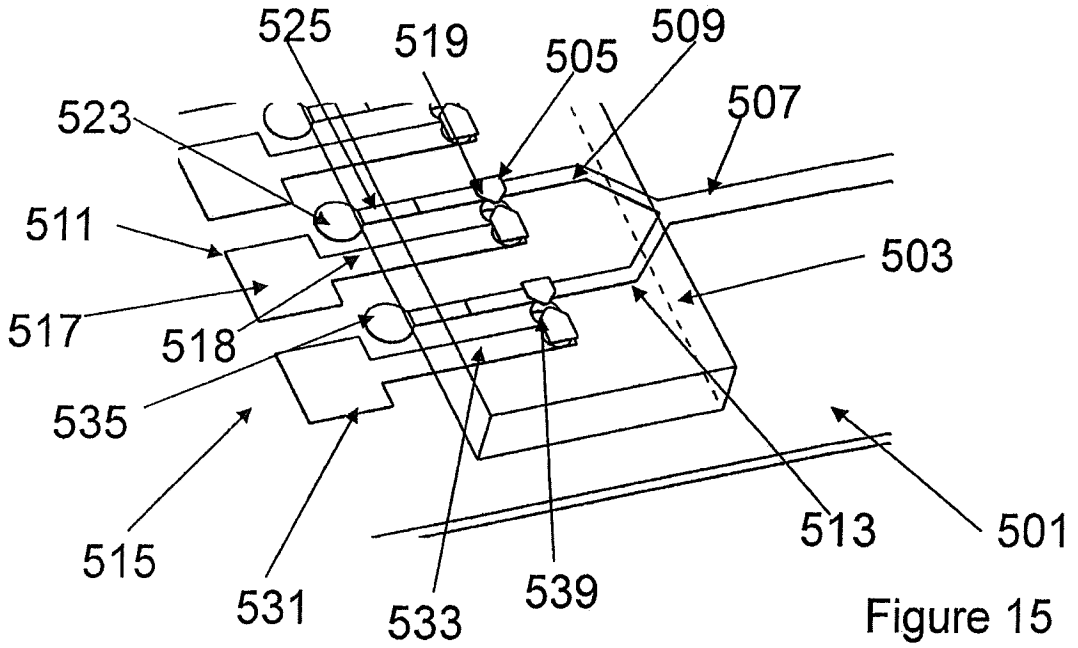

Figure 15

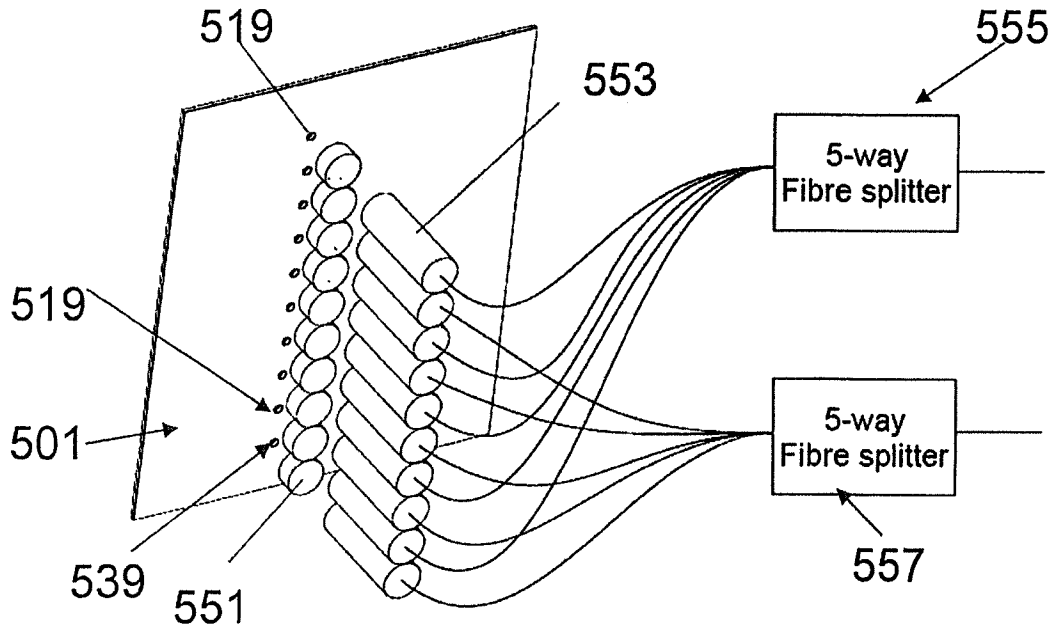

Figure 16

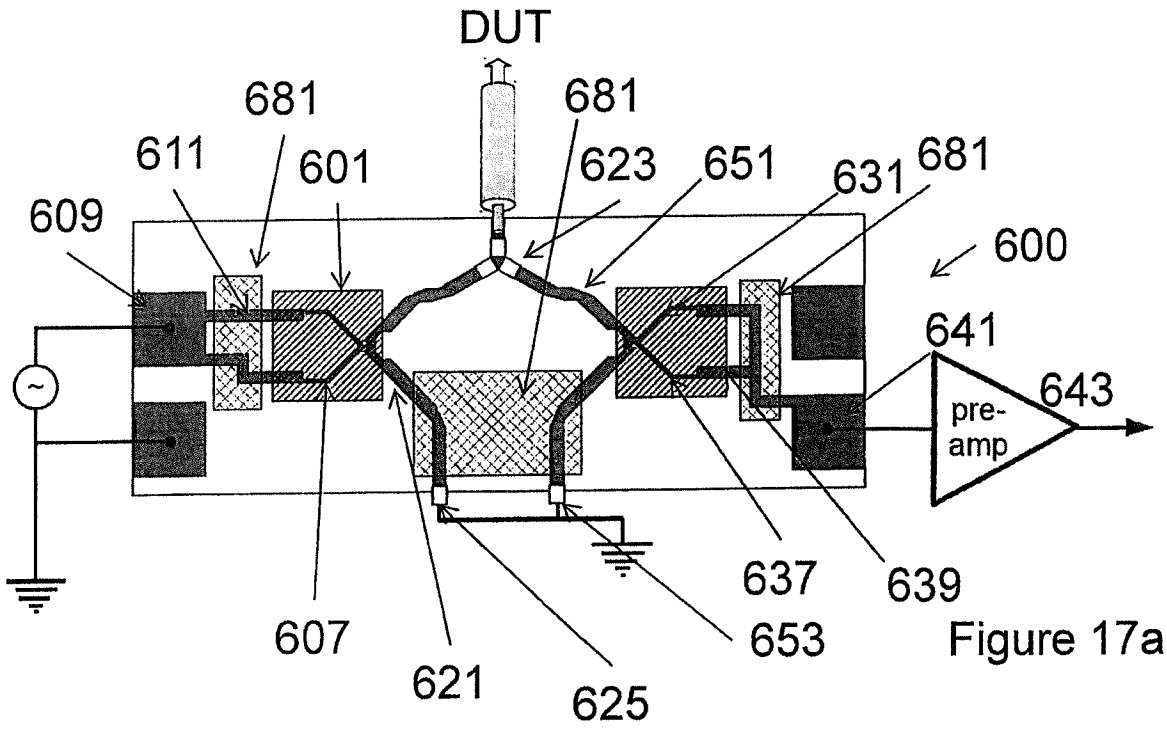

Figure 17a

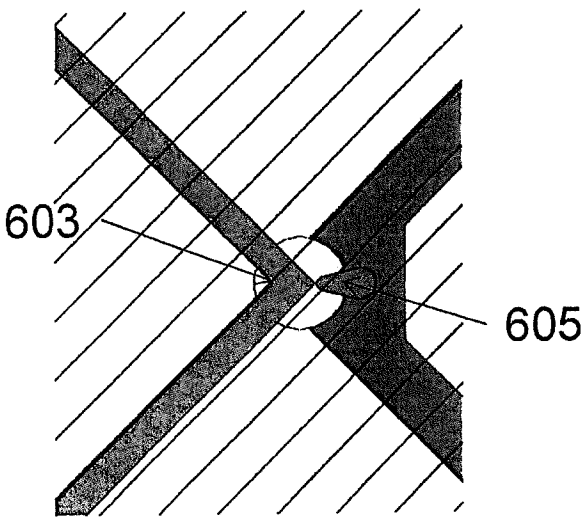

Figure 17b

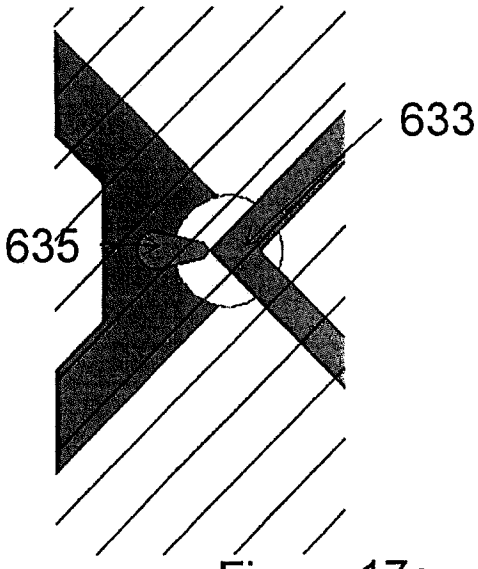

Figure 17c

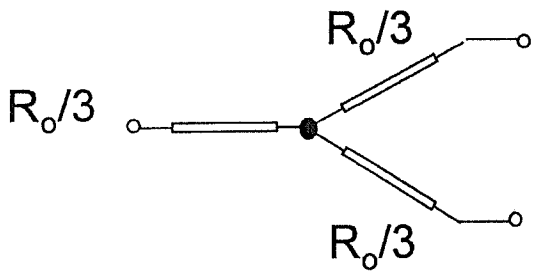

Figure 18a

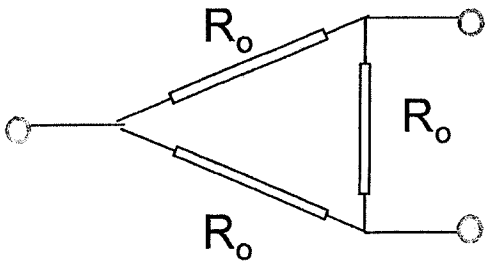

Figure 18b

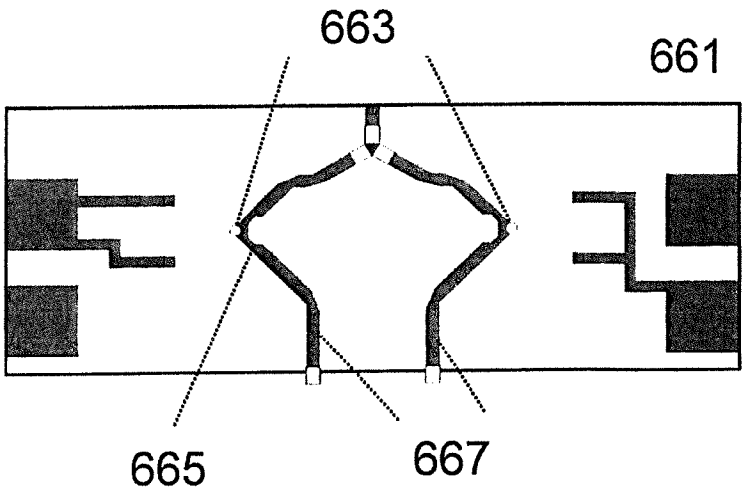

Figure 19

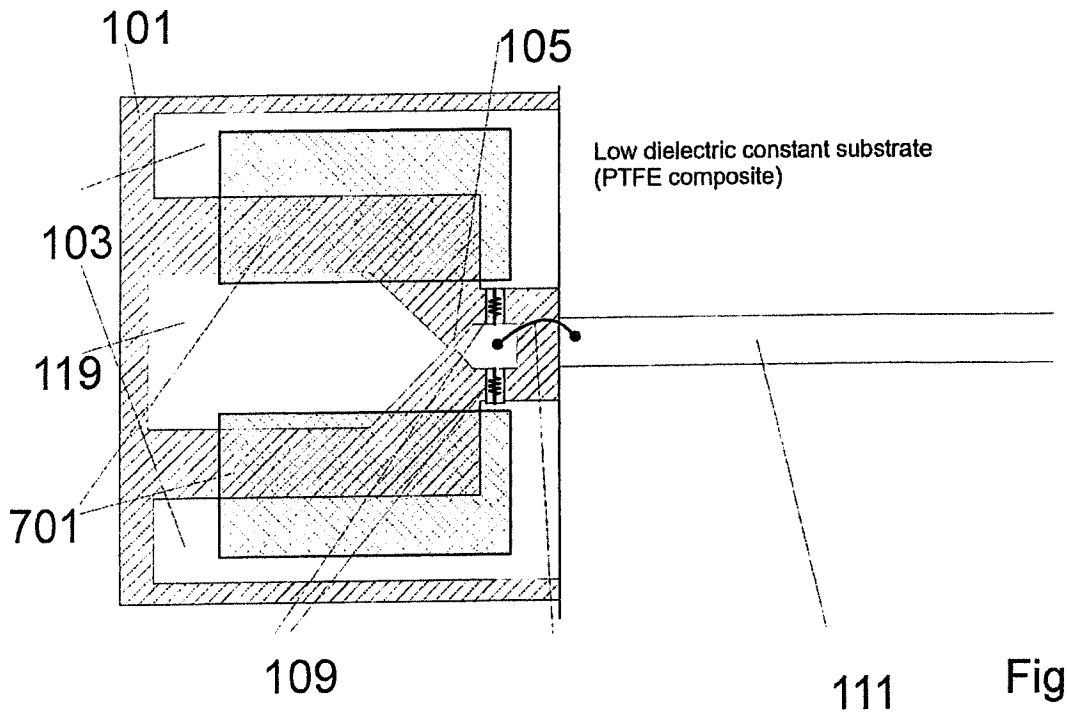

Figure 20

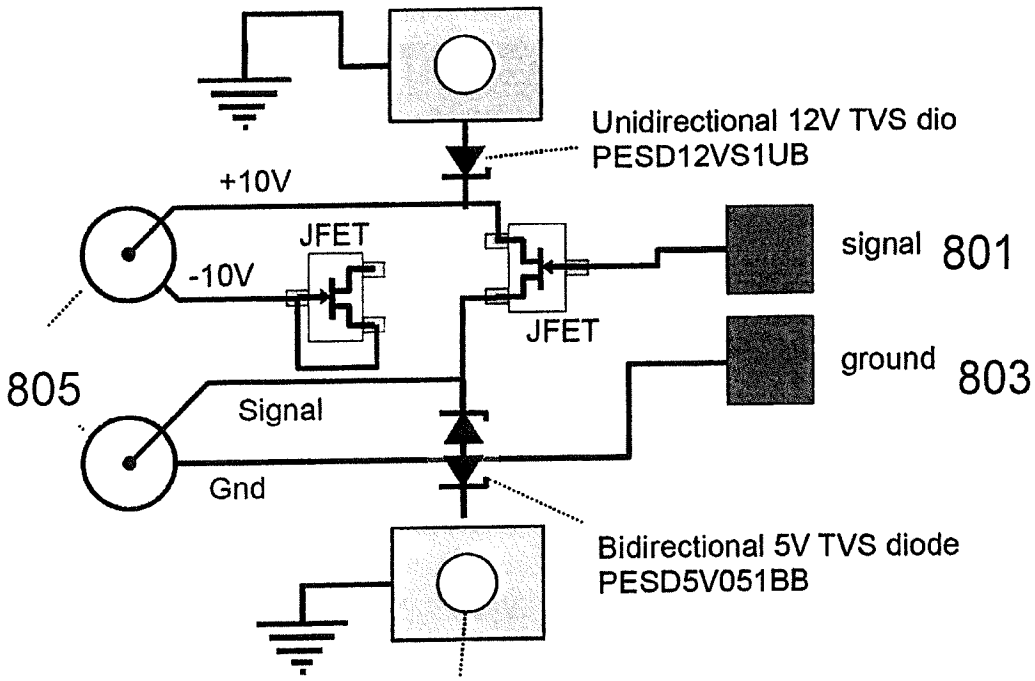

Figure 21

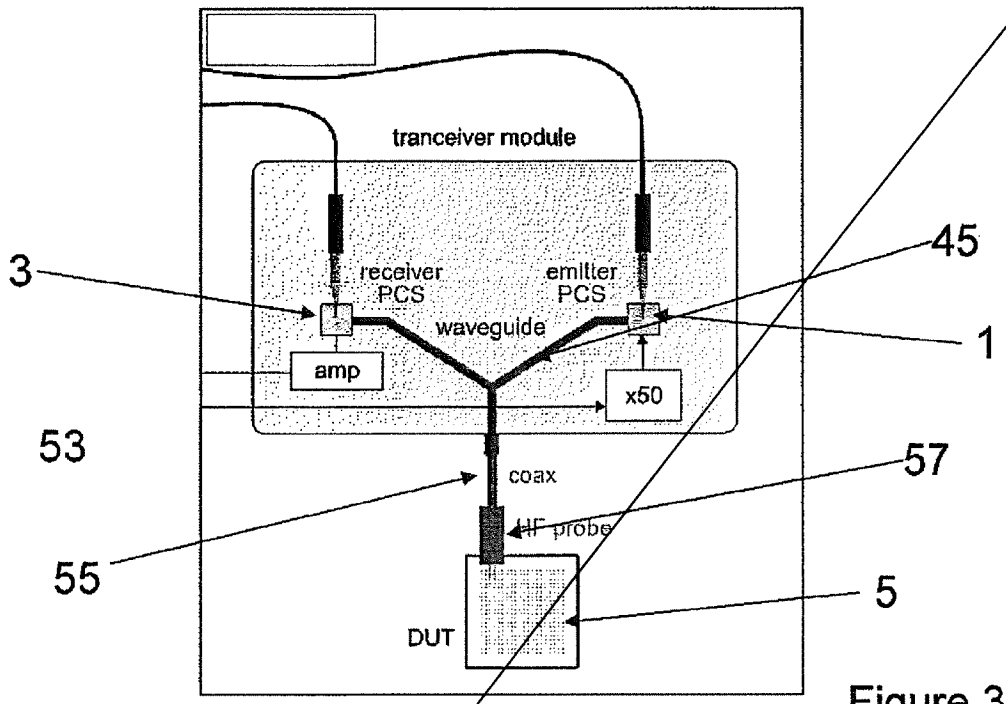

Figure 3

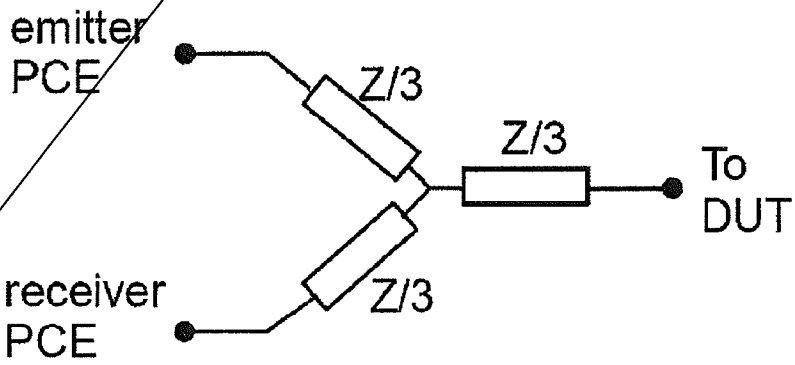

Figure 3a

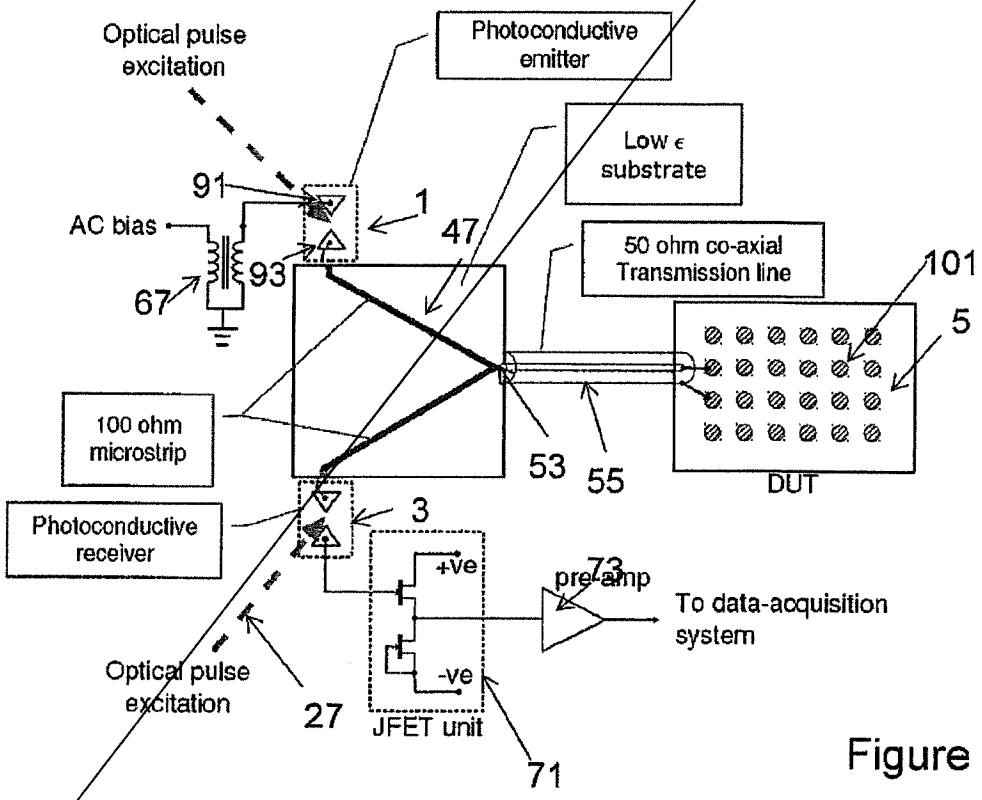
Optical pulse excitation
Photoconductive emitter
Low ϵ substrate
91
1
AC bias
47
50 ohm co-axial Transmission line
101
93
67
5
100 ohm microstrip
53
55
DUT
Photoconductive receiver
3
+ve
73
pre-amp
To data-acquisition system
-ve
Optical pulse excitation
27
JFET unit
71

Figure 4

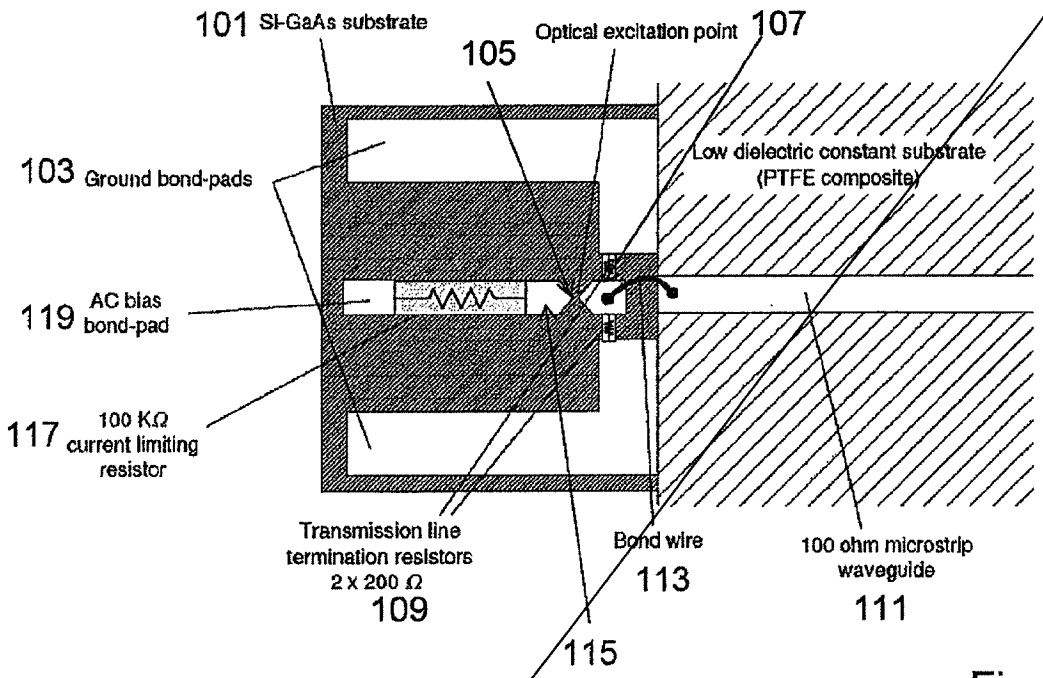

Figure 5

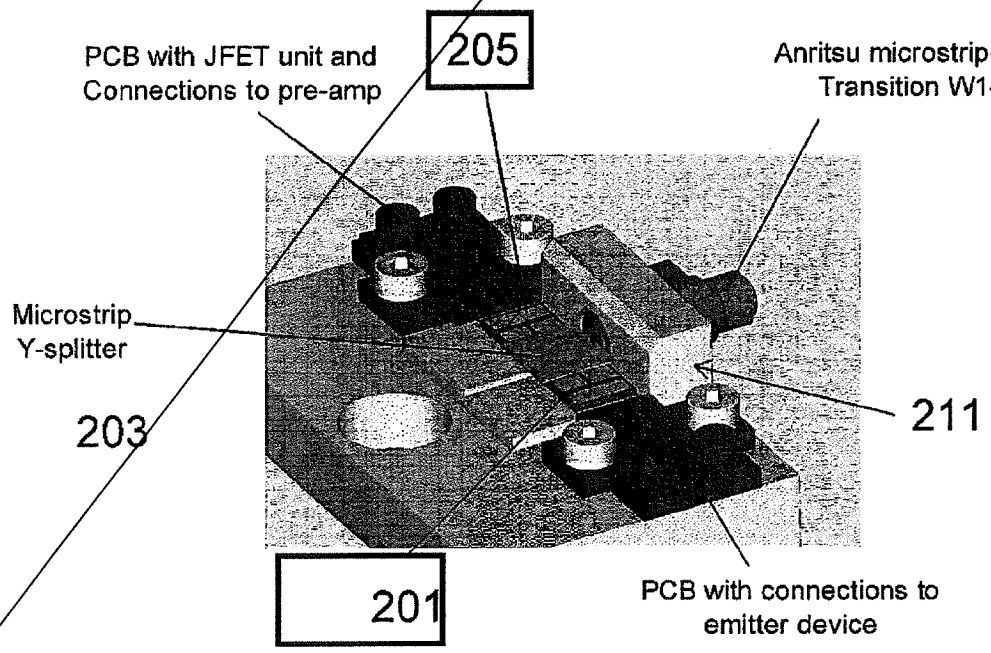

Figure 6

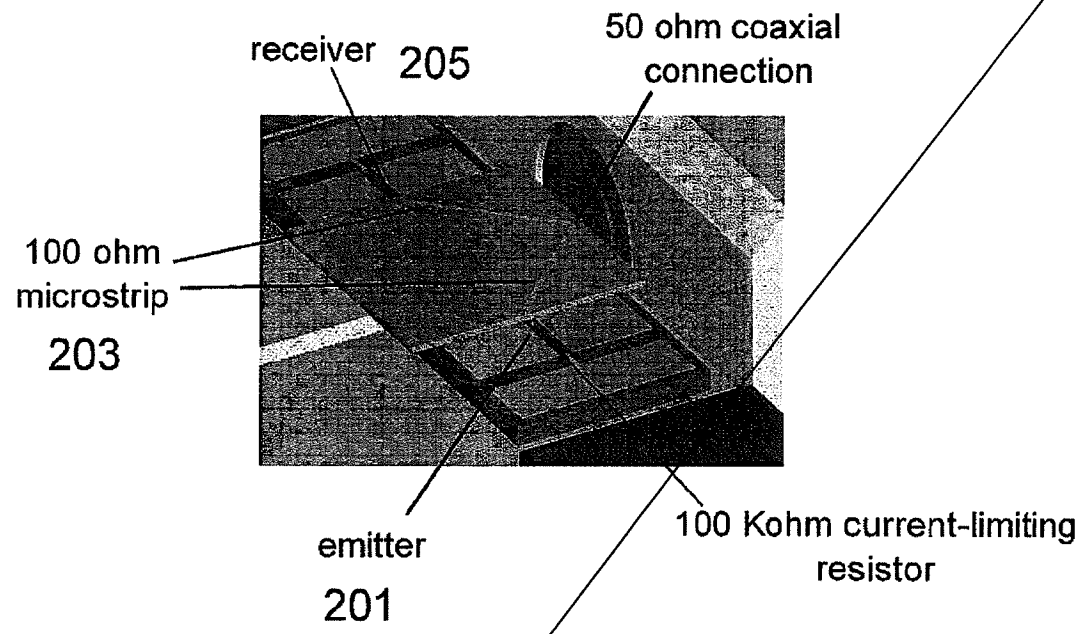

Figure 7

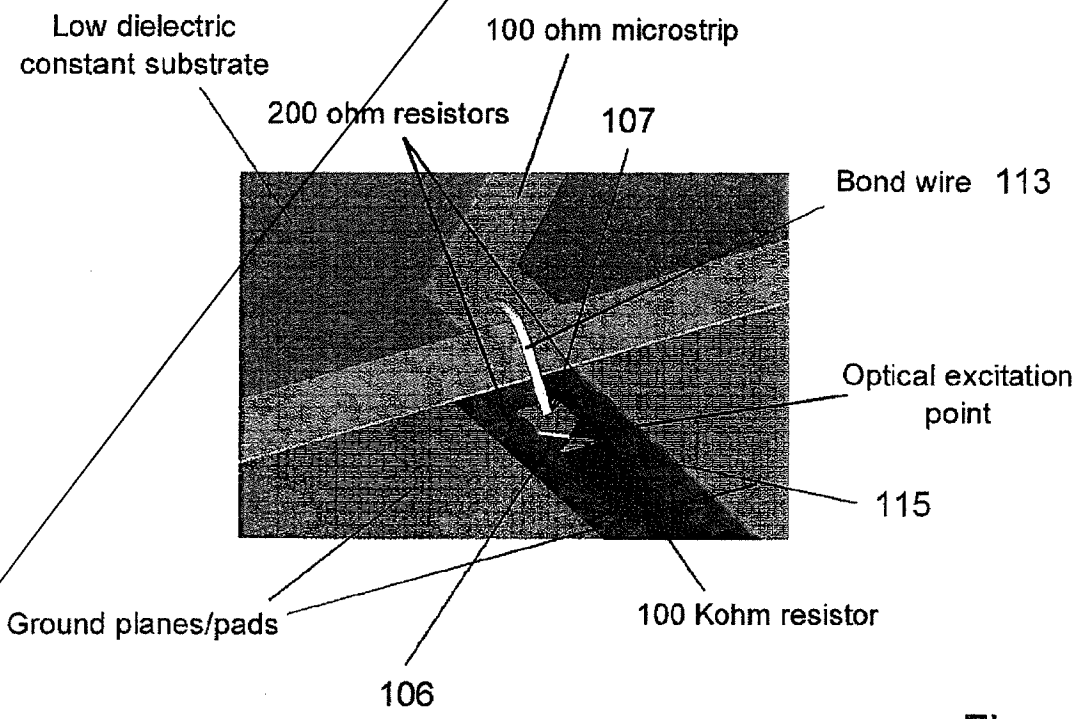

Figure 8

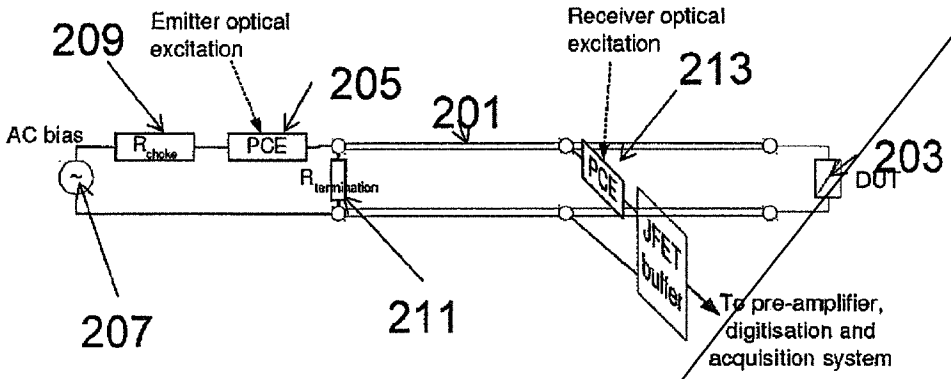

Figure 9

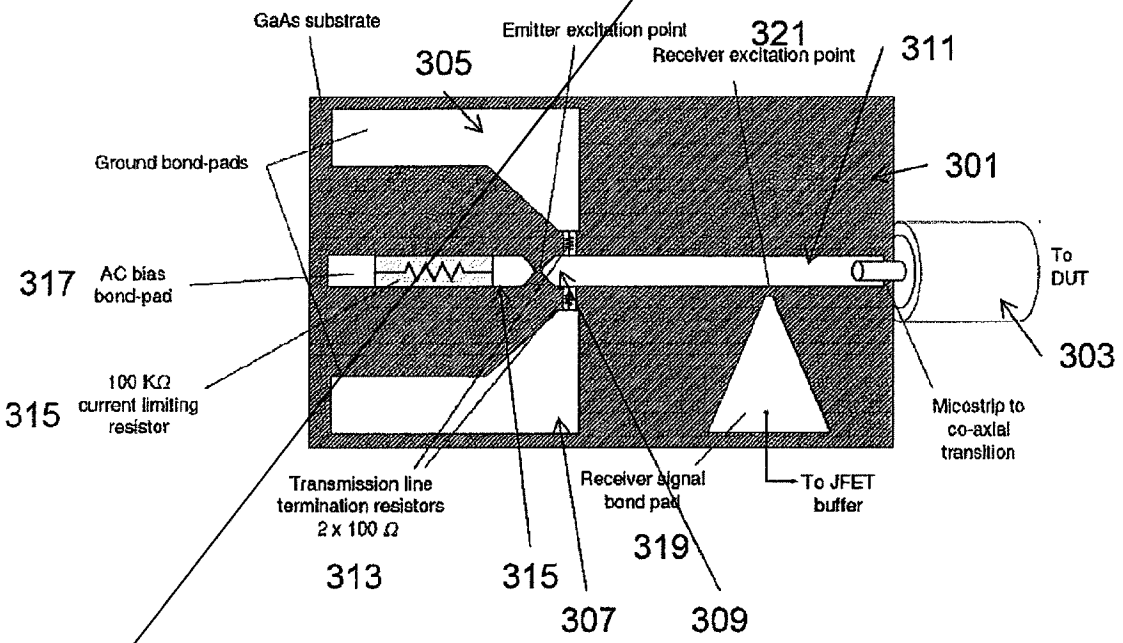

Figure 10

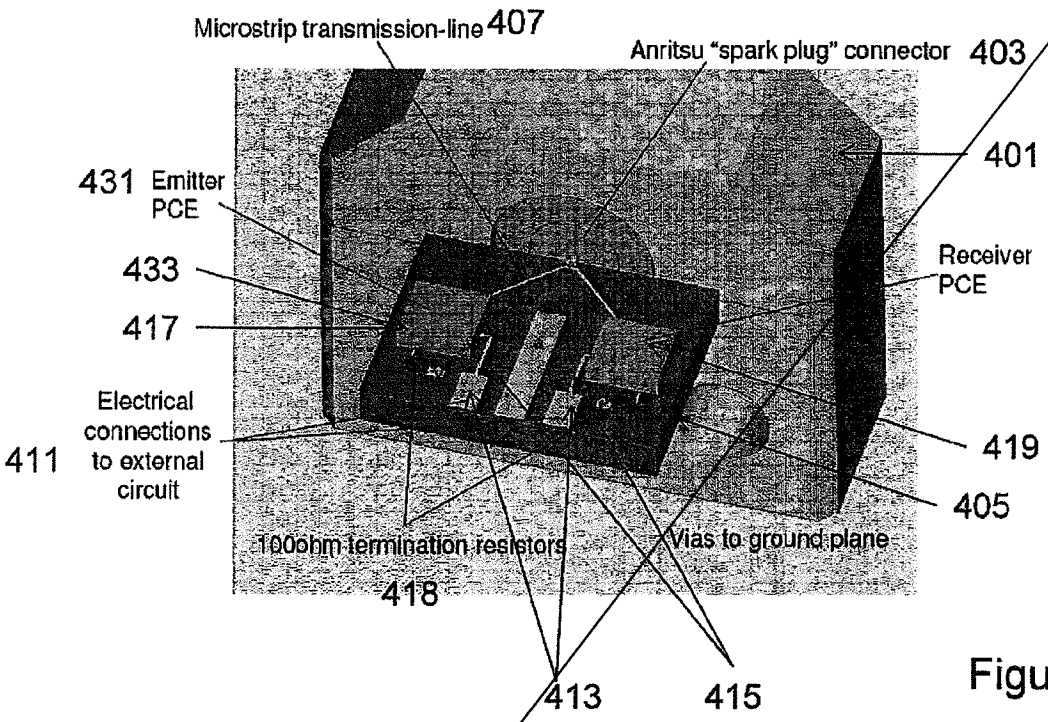

Figure 11

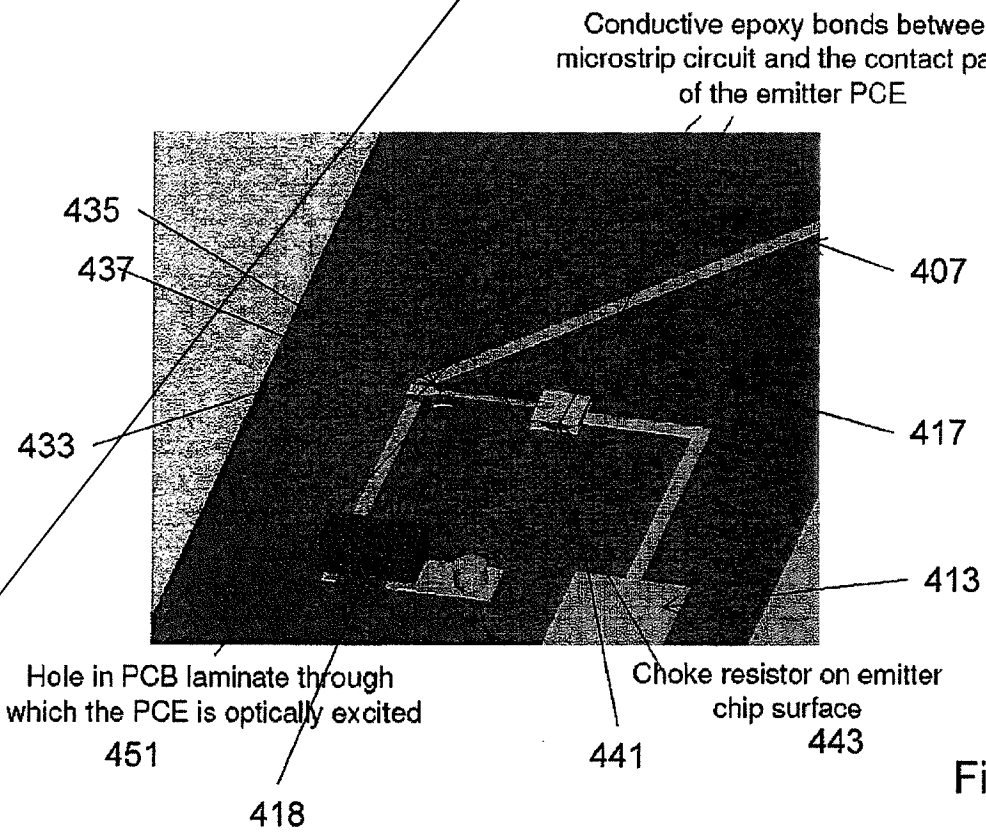

Figure 12

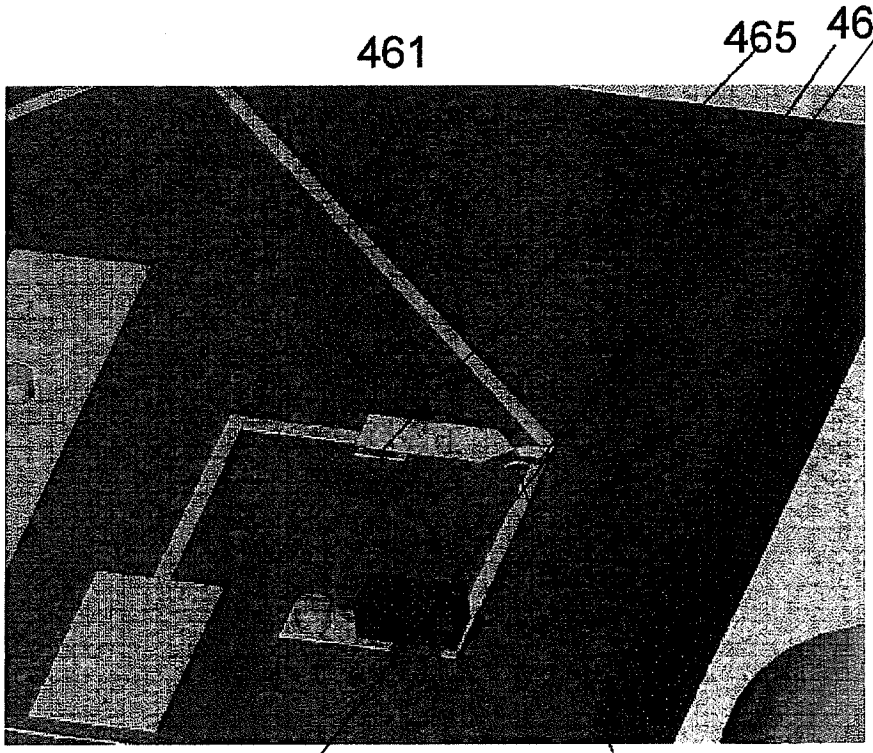

Figure 13

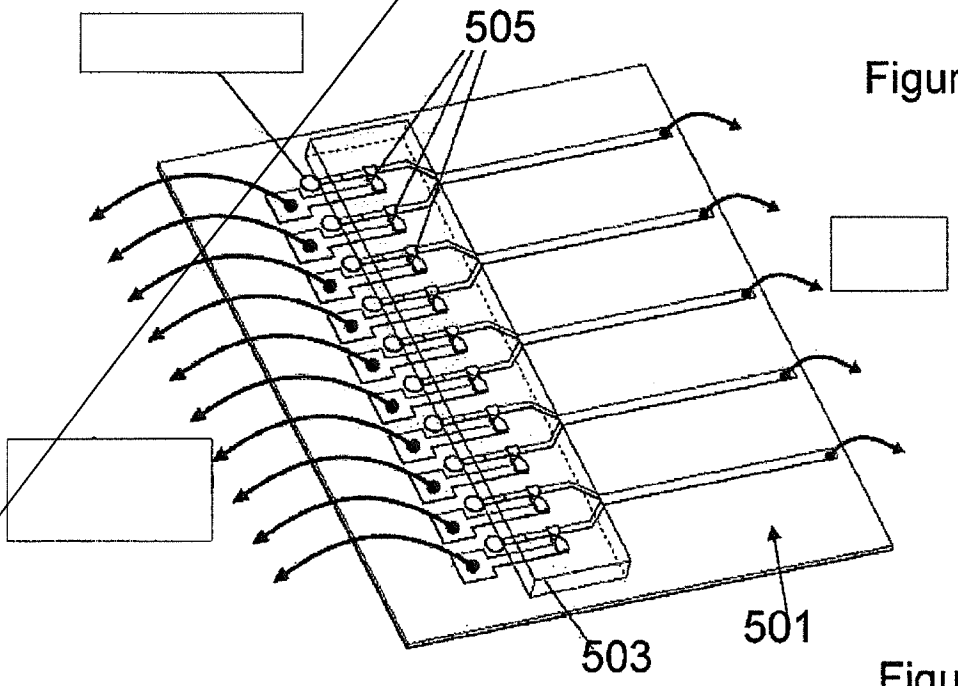

Figure 14

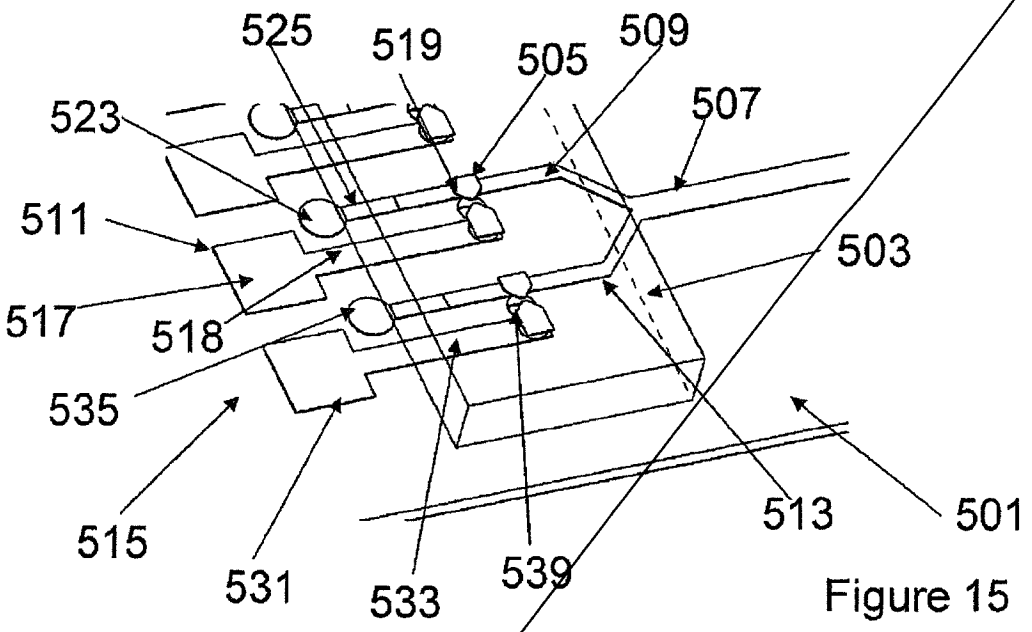

Figure 15

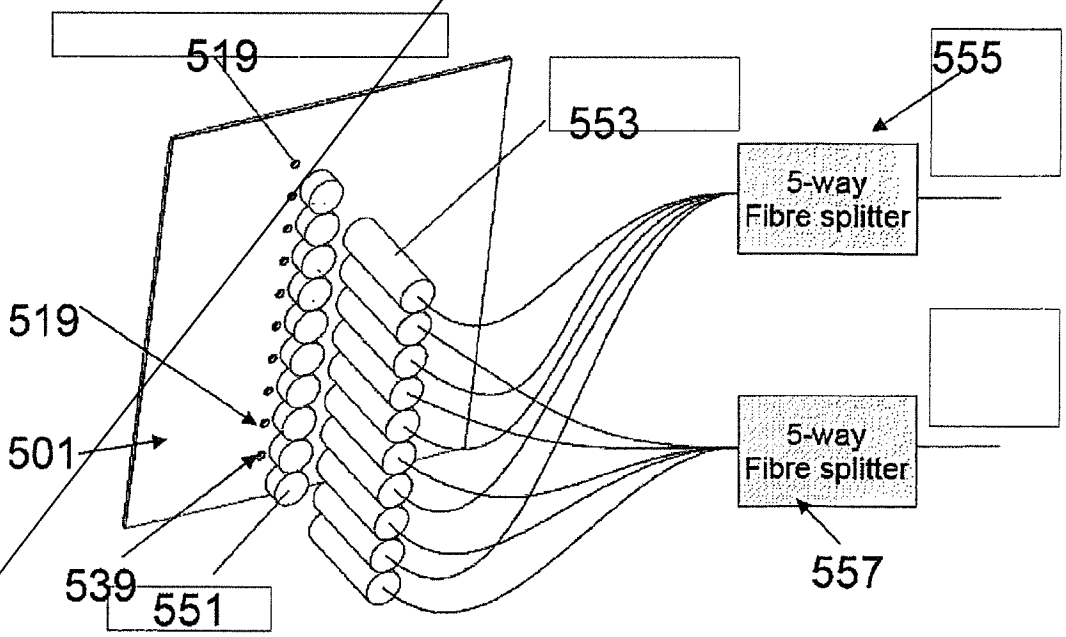

Figure 16

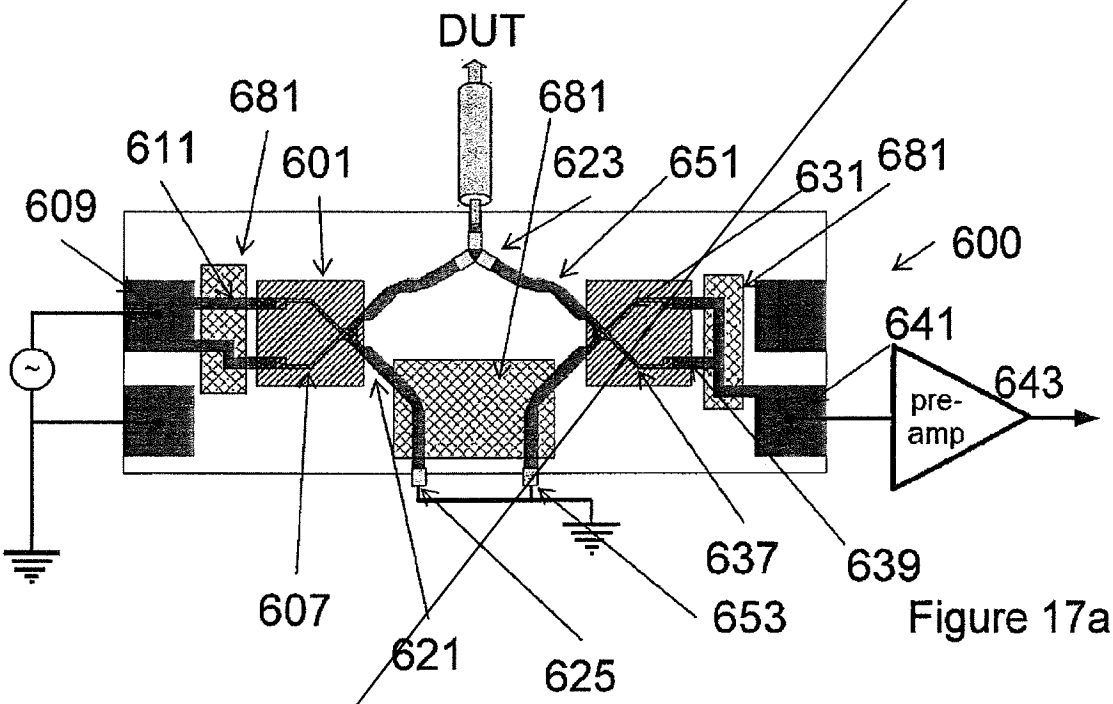

Figure 17a

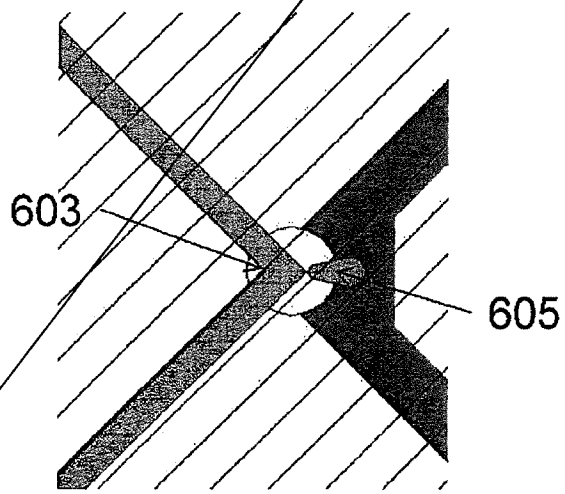

Figure 17b

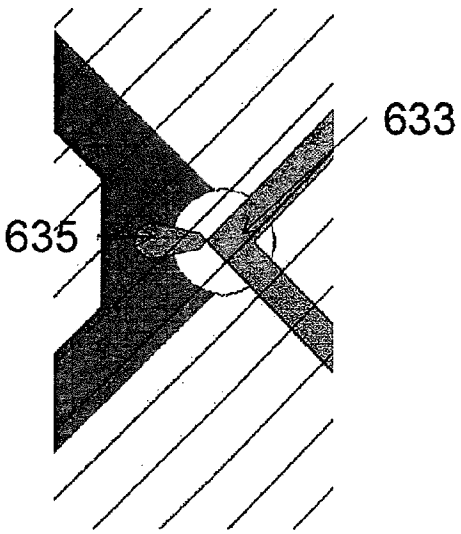

Figure 17c

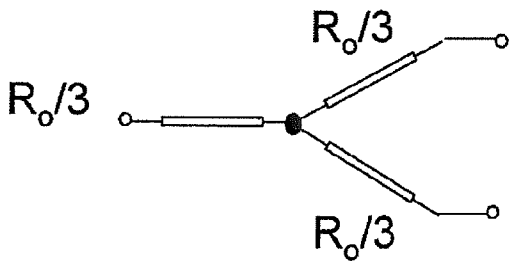

Figure 18a

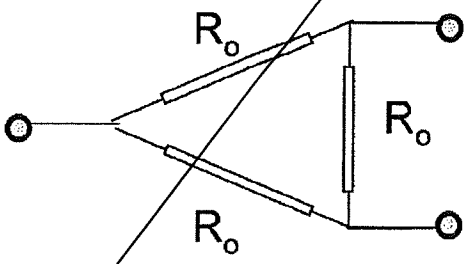

Figure 18b

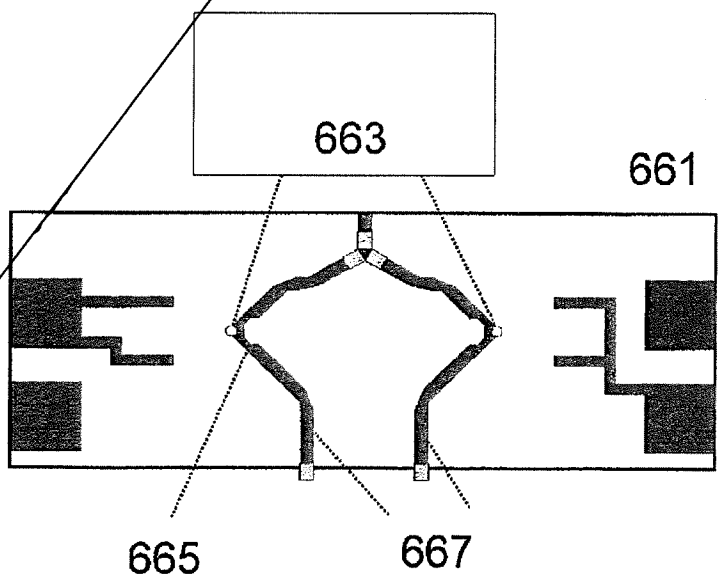

Figure 19

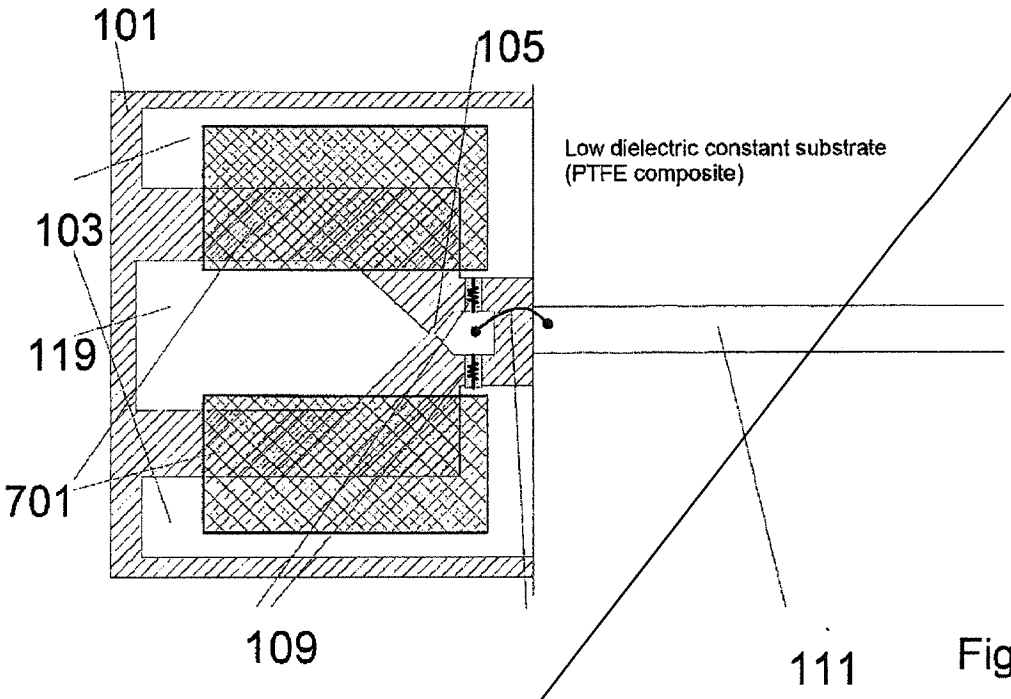

Figure 20

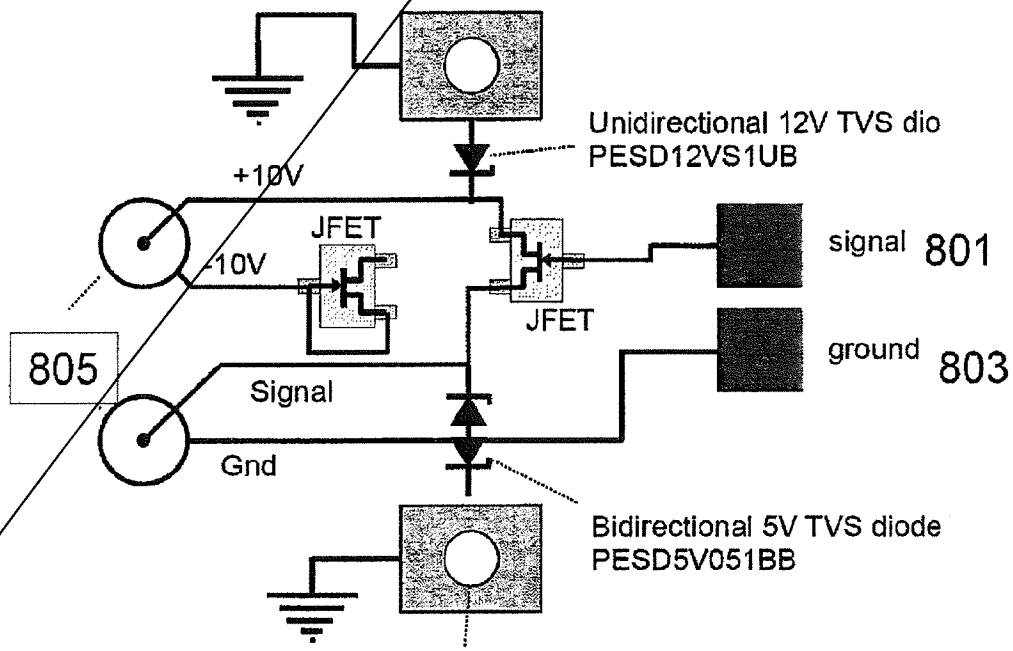

Figure 21