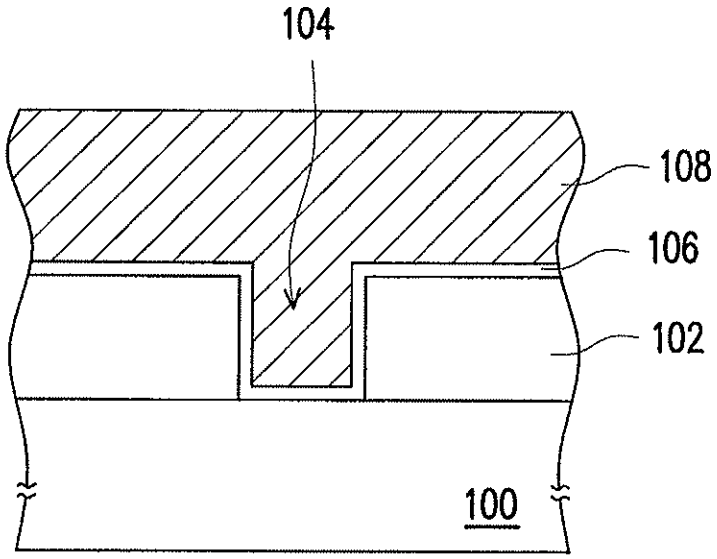

FIG. 1A

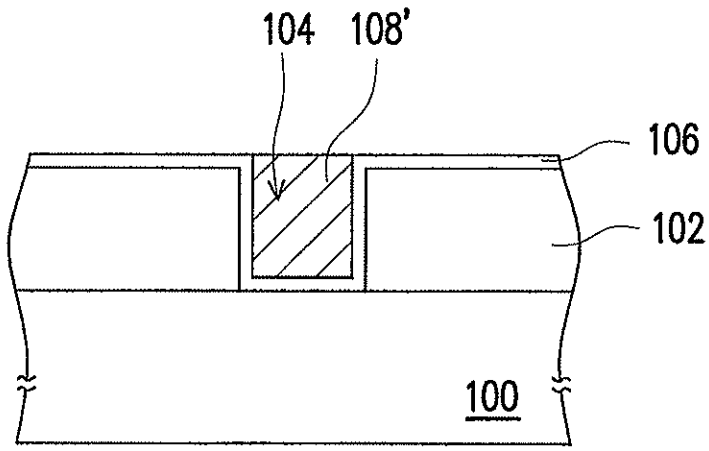

FIG. 1B

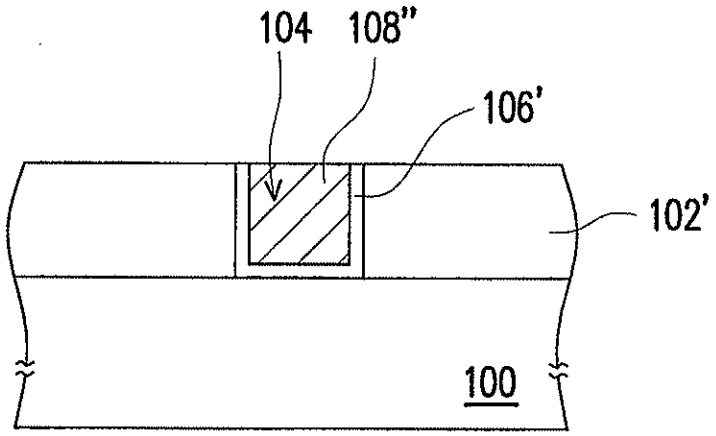
104
108"
106'
102'
100

FIG. 1C

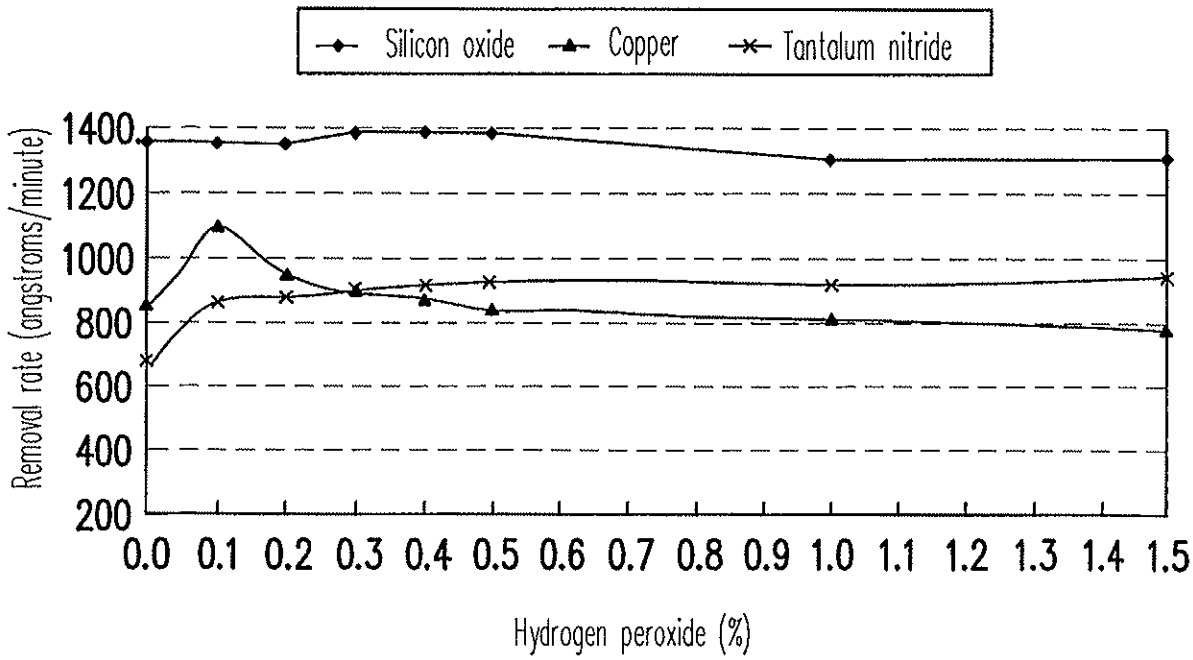
Silicon oxide
Copper
Tantalum nitride
Removal rate (angstroms/minute)
1400
1200
1000
800
600
400
200
0.0
0.1
0.2
0.3
0.4
0.5
0.6
0.7
0.8
0.9
1.0
1.1
1.2
1.3
1.4
1.5
Hydrogen peroxide (%)

FIG. 2