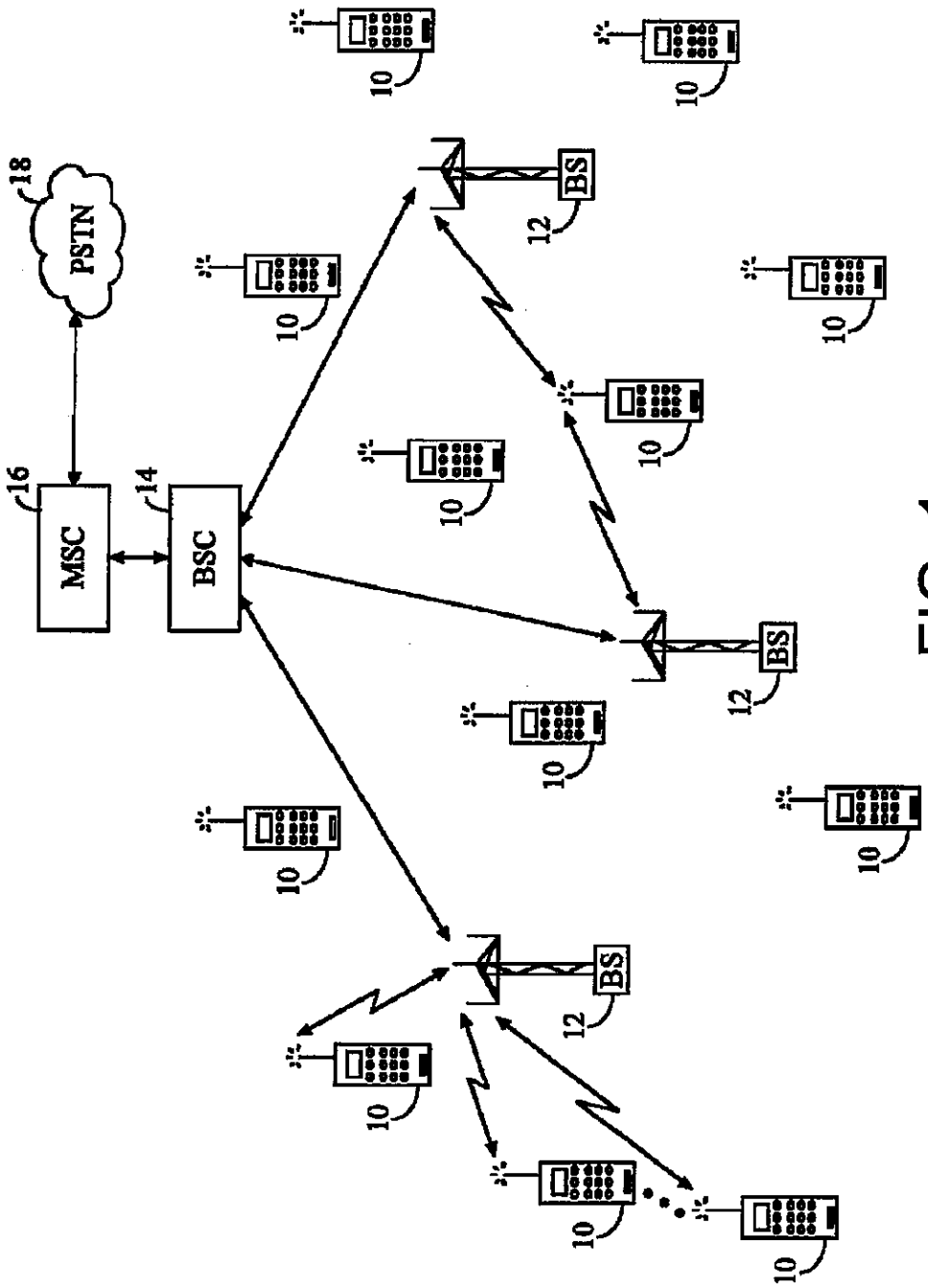

FIG. 1

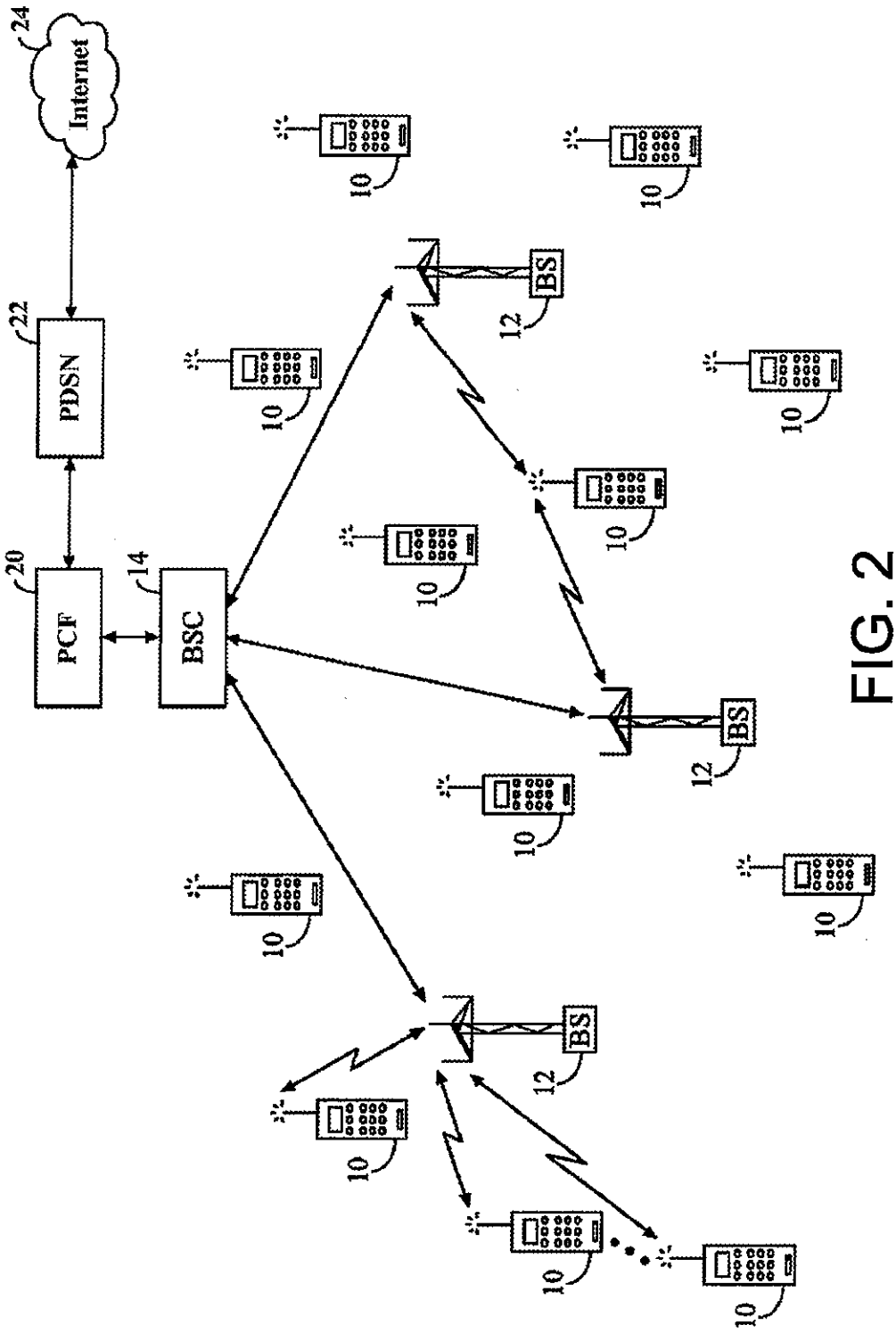

FIG. 2

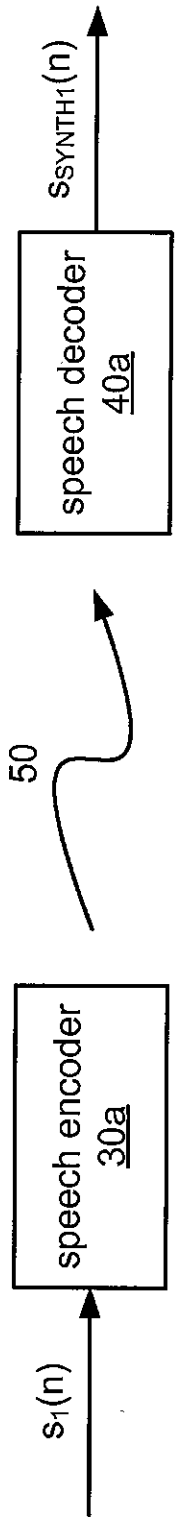
$s_1(n)$
speech encoder
30a
50
speech decoder
40a
$s_{SYNTH1}(n)$

FIG. 3A

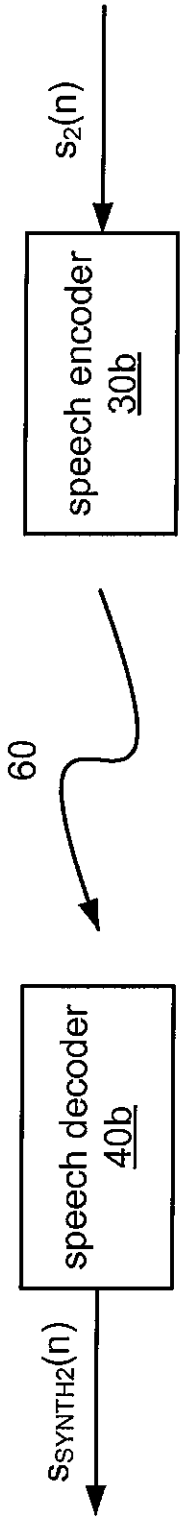
$s_2(n)$
speech encoder
30b
60
speech decoder
40b
$s_{SYNTH2}(n)$

FIG. 3B

FIG. 4

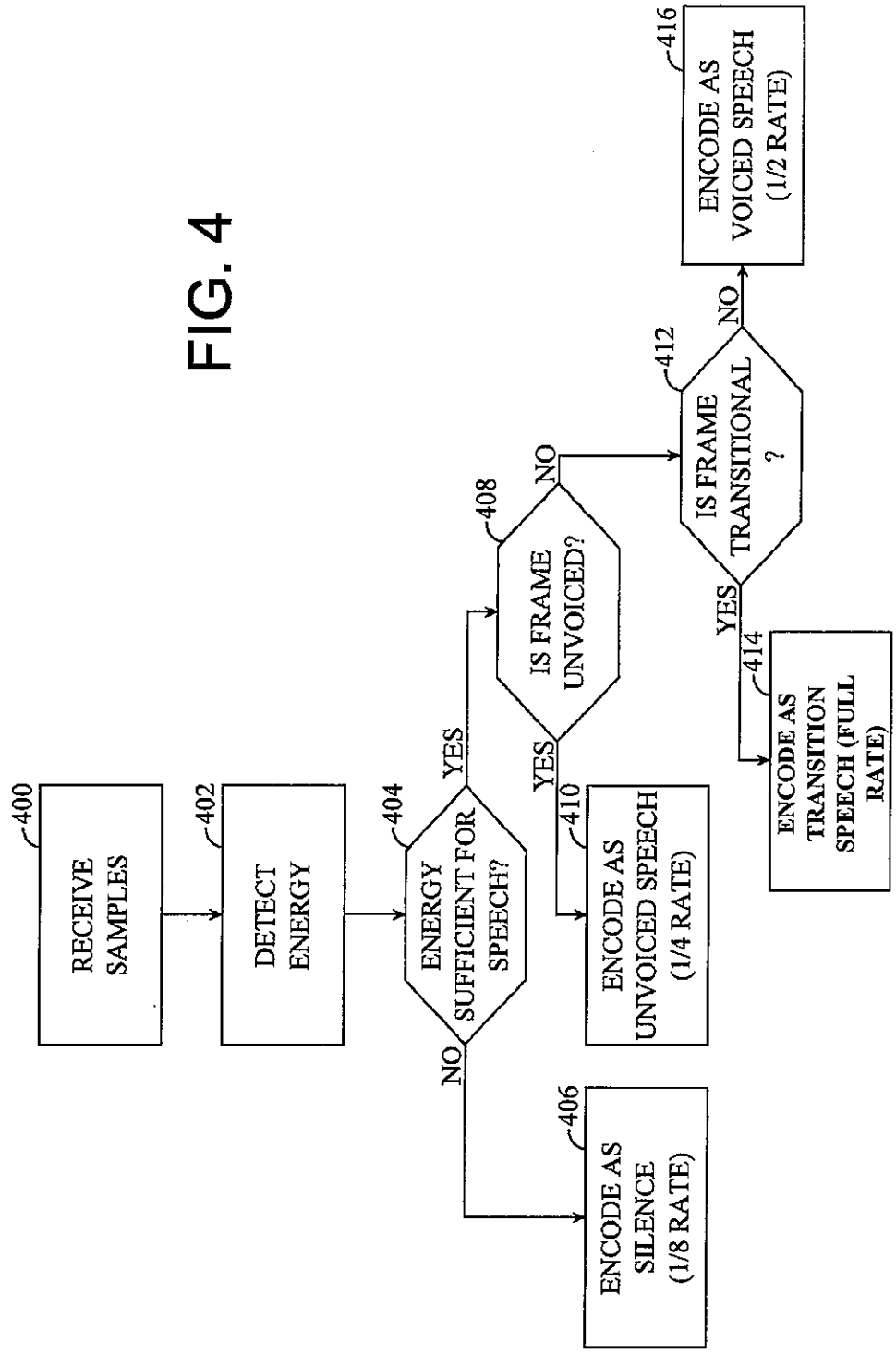
400
RECEIVE SAMPLES
402
DETECT ENERGY
404
ENERGY SUFFICIENT FOR SPEECH?
YES
NO
406
ENCODE AS SILENCE (1/8 RATE)
408
IS FRAME UNVOICED?
YES
NO
410
ENCODE AS UNVOICED SPEECH (1/4 RATE)
412
IS FRAME TRANSITIONAL ?
YES
NO
414
ENCODE AS TRANSITION SPEECH (FULL RATE)
416
ENCODE AS VOICED SPEECH (1/2 RATE)

FIG. 5A

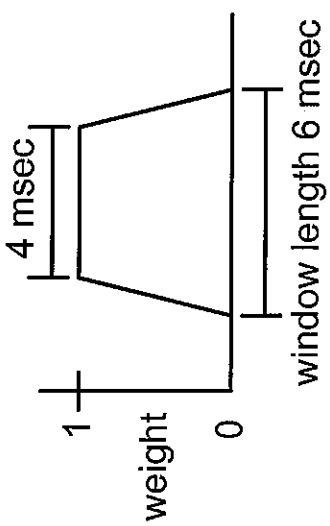
4 msec
1
weight
0
window length 6 msec

FIG. 5B

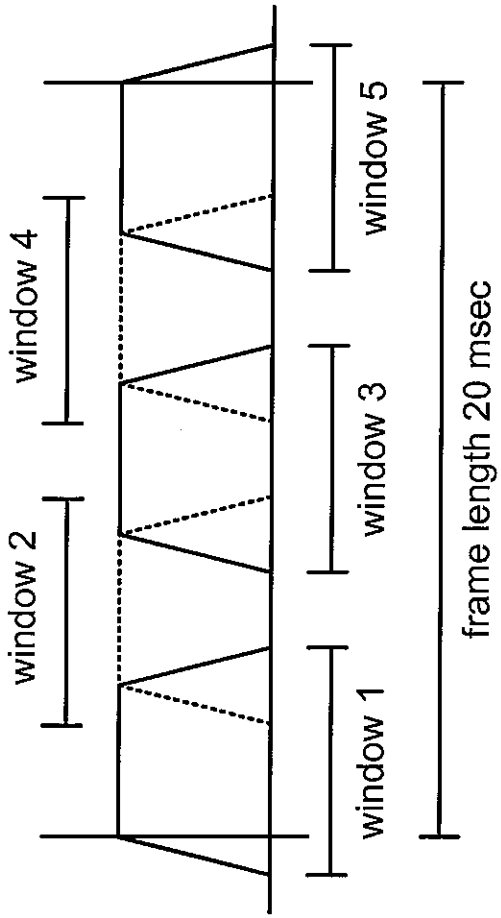
window 2
window 4
window 1
window 3
window 5
frame length 20 msec

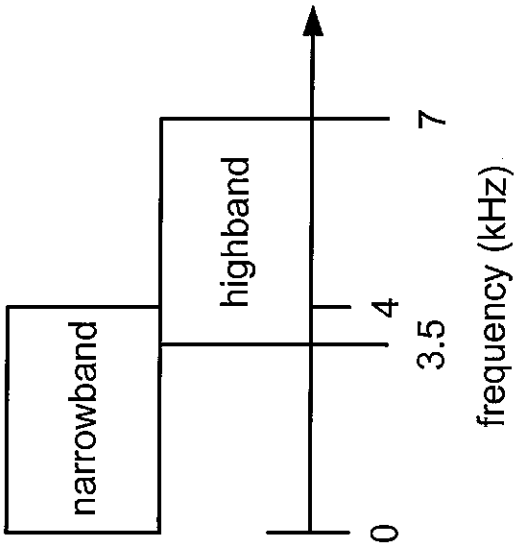
narrowband
highband
0
4
3.5
7
frequency (kHz)

FIG. 6B

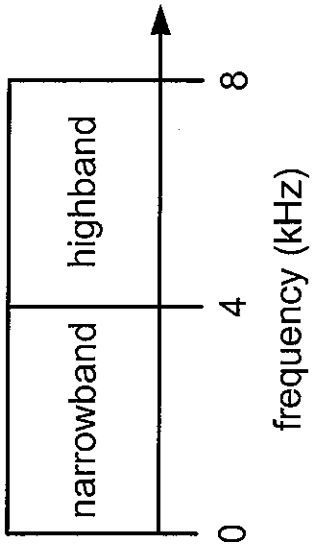
narrowband
highband
0
4
8
frequency (kHz)

FIG. 6A

FIG. 7A

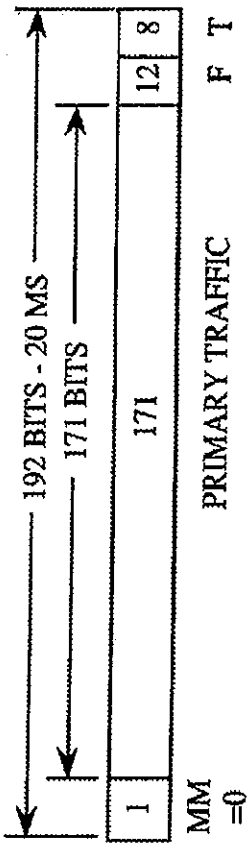

FIG. 7B

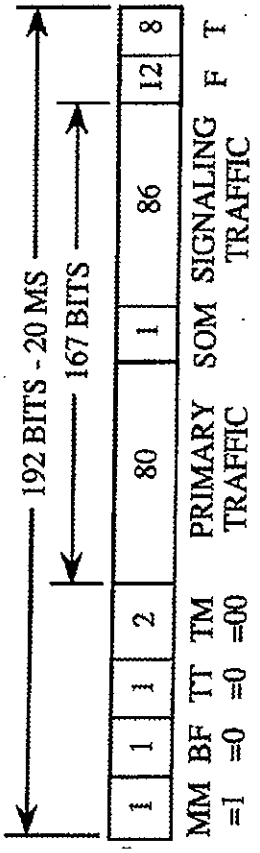

FIG. 7C

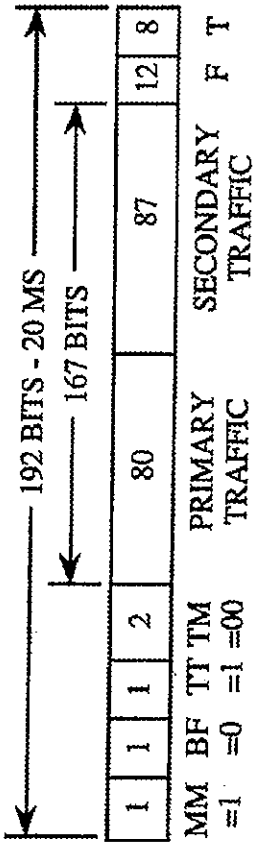

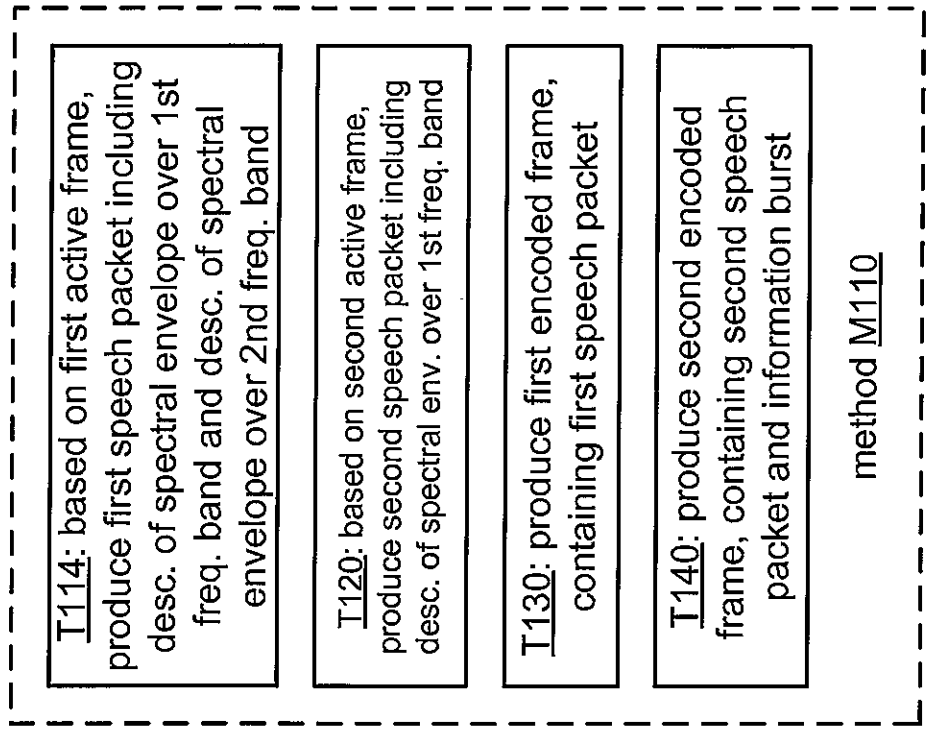
T114: based on first active frame, produce first speech packet including desc. of spectral envelope over 1st freq. band and desc. of spectral envelope over 2nd freq. band
T120: based on second active frame, produce second speech packet including desc. of spectral env. over 1st freq. band
T130: produce first encoded frame, containing first speech packet
T140: produce second encoded frame, containing second speech packet and information burst
method M110

FIG. 8B

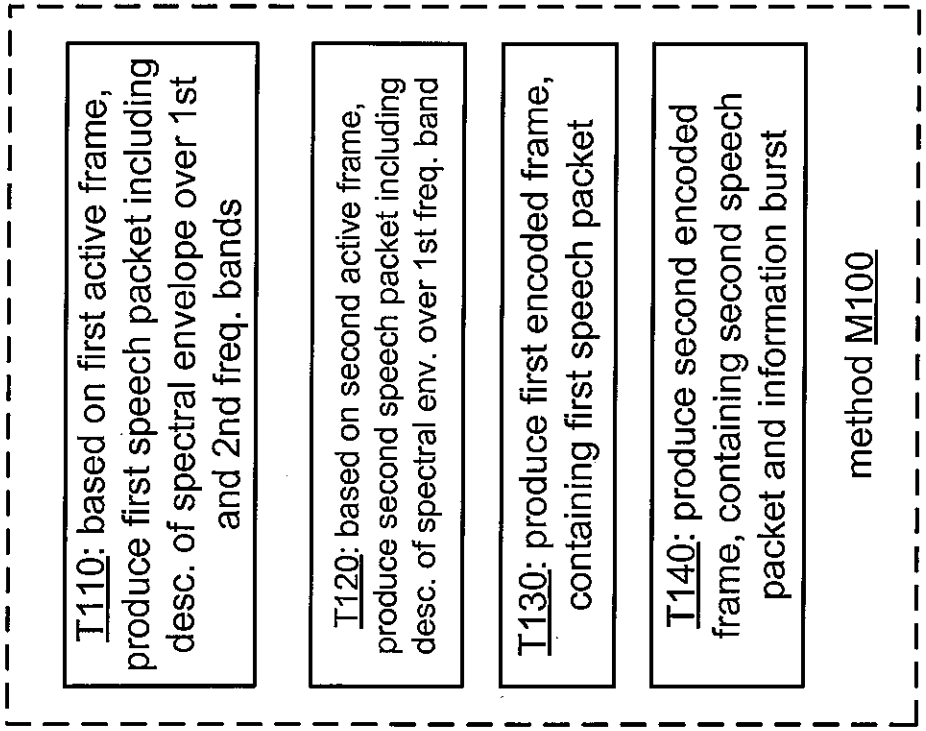
T110: based on first active frame, produce first speech packet including desc. of spectral envelope over 1st and 2nd freq. bands
T120: based on second active frame, produce second speech packet including desc. of spectral env. over 1st freq. band
T130: produce first encoded frame, containing first speech packet
T140: produce second encoded frame, containing second speech packet and information burst
method M100

FIG. 8A

FIG. 9

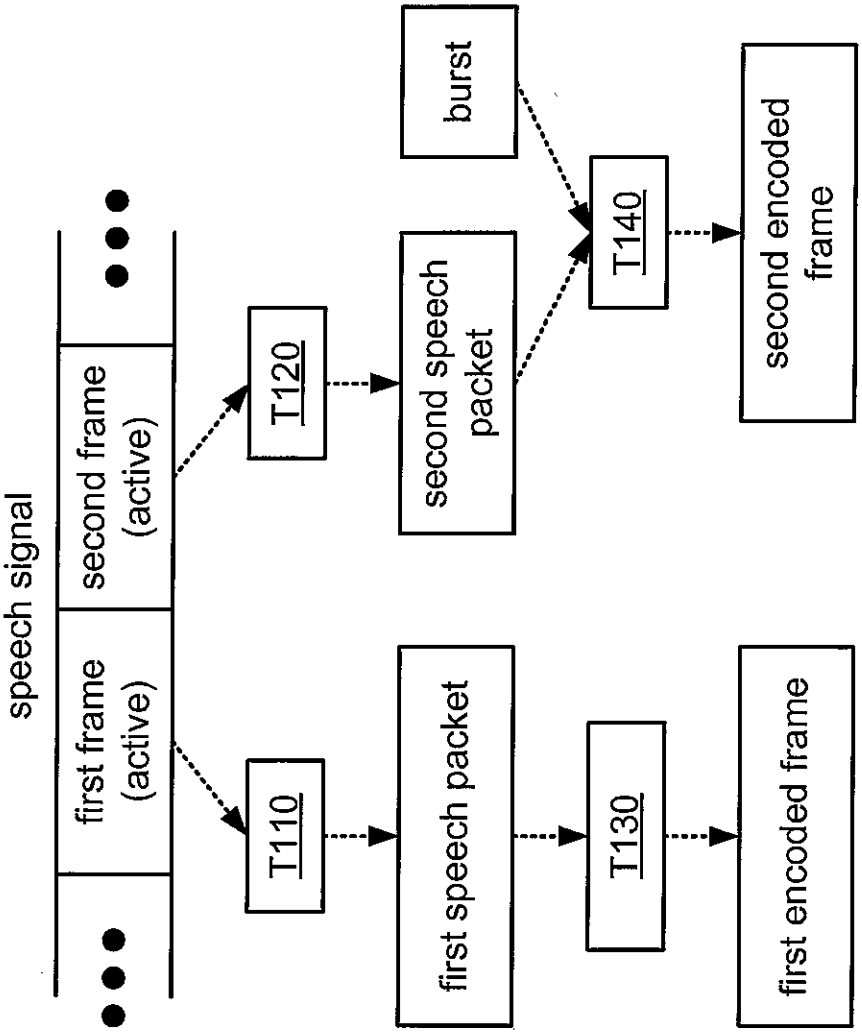
speech signal
first frame (active)
second frame (active)
T110
T120
first speech packet
second speech packet
burst
T130
T140
first encoded frame
second encoded frame

FIG. 10

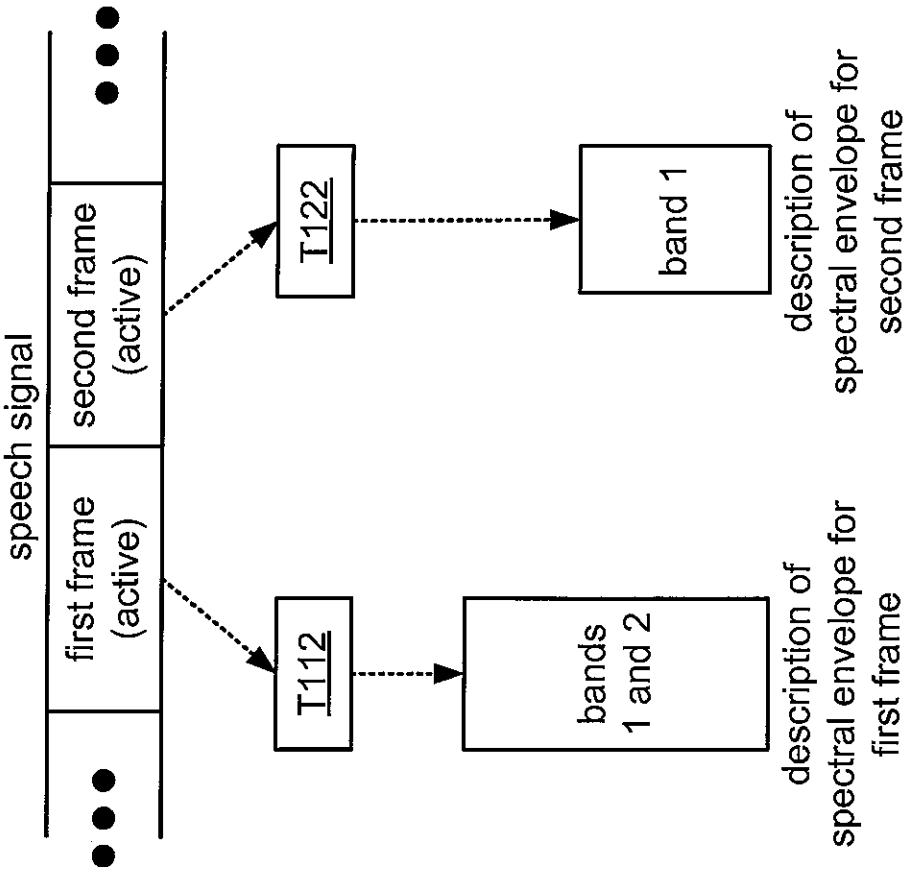
speech signal
first frame (active)
second frame (active)
T112
T122
bands 1 and 2
band 1
description of spectral envelope for first frame
description of spectral envelope for second frame
s_0
s_2
length in bits

FIG. 11

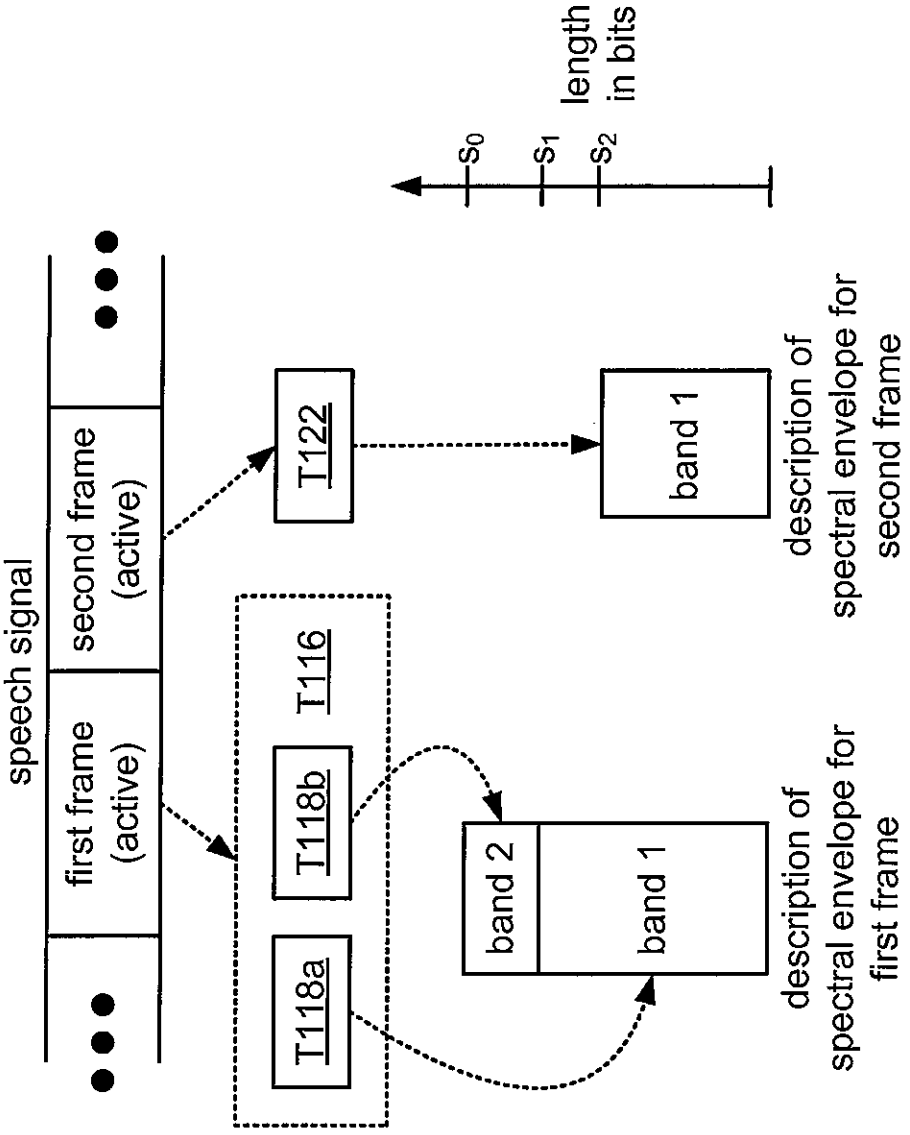
speech signal
first frame (active)
second frame (active)
T116
T118a
T118b
T122
band 1
band 2
band 1
description of spectral envelope for first frame
description of spectral envelope for second frame
length in bits
s_0
s_1
s_2

	narrowband	high band	available for other use	speech type
coding scheme 1: full-rate CELP (171 bits)	153 bits (28 for spectral, 125 for excitation)	16 bits (8 for spectral, 8 for temporal)	2 bits	voiced
coding scheme 2: half-rate CELP (80 bits)	80 bits (22 for spectral, 58 for temporal)	(no bits)	(no bits)	voiced
coding scheme 3: half-rate NELP (80 bits)	47 bits (28 for spectral, 19 for temporal)	27 bits (12 for spectral, 15 for temporal)	6 bits	unvoiced
coding scheme 4: eighth-rate NELP (16 bits)	15 bits (10 for spectral, 5 for temporal)	(no bits)	1 bit	inactive

FIG. 12

parameter (value)	number of bits	bit index in packet
delay index	7	P0-P6
LSP indices (four)	6, 6, 9, 7	P7-P34
adaptive codebook gain indices (three)	3, 3, 3	P35-P43
fixed codebook pulse index delay adjust	94	P44-P137
fixed codebook gain indices (three)	5, 5, 5	P138-P152
highband LSP index	8	P153-P160
highband gain shape index	4	P161-P164
highband gain frame index	4	P165-P168
mode bit (CELP/MDCT)	1	P169
EVRC-B I/O flag	1	P170

FIG. 13

parameter (value)	number of bits	bit index in packet
delay index	7	P0-P6
LSP indices (three)	7, 7, 8	P7-P28
adaptive codebook gain indices (three)	3, 3, 3	P29-P37
fixed codebook pulse indices (three)	10, 10, 10	P38-P67
fixed codebook gain indices (three)	4, 4, 4	P68-P79

FIG. 14

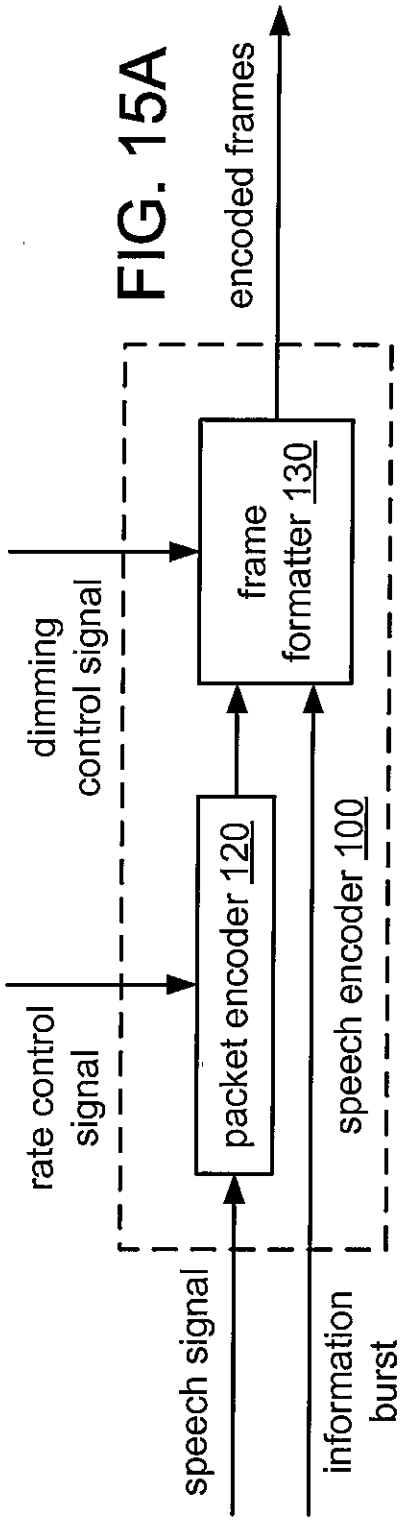

FIG. 15A

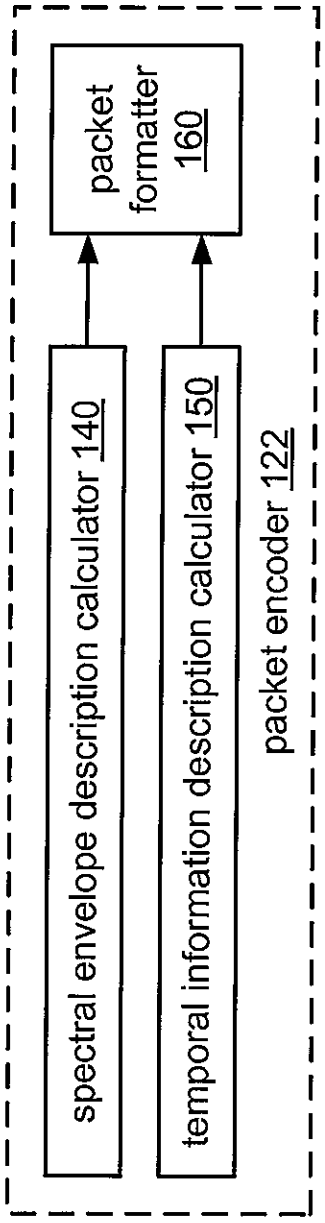

FIG. 15B

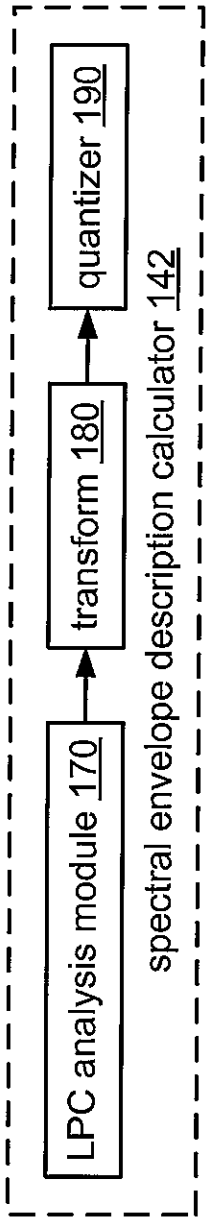

FIG. 15C

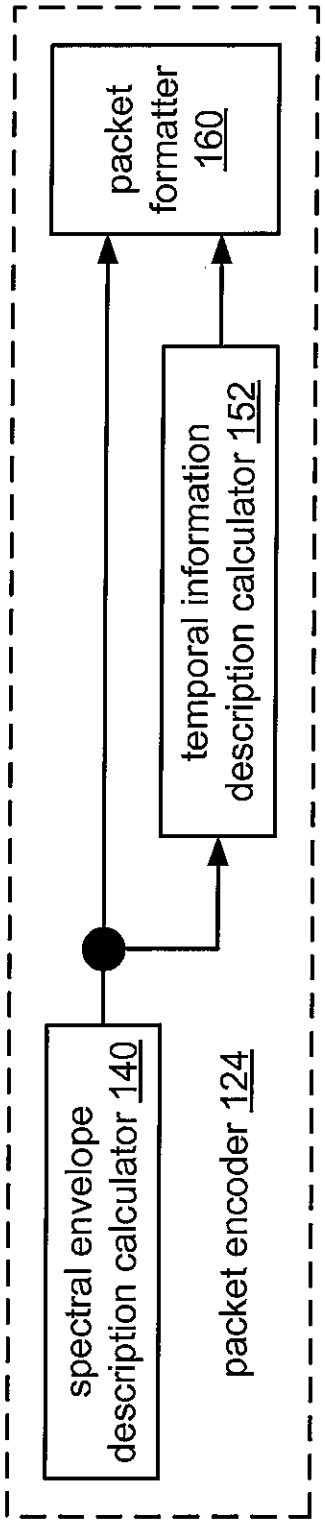

FIG. 16A

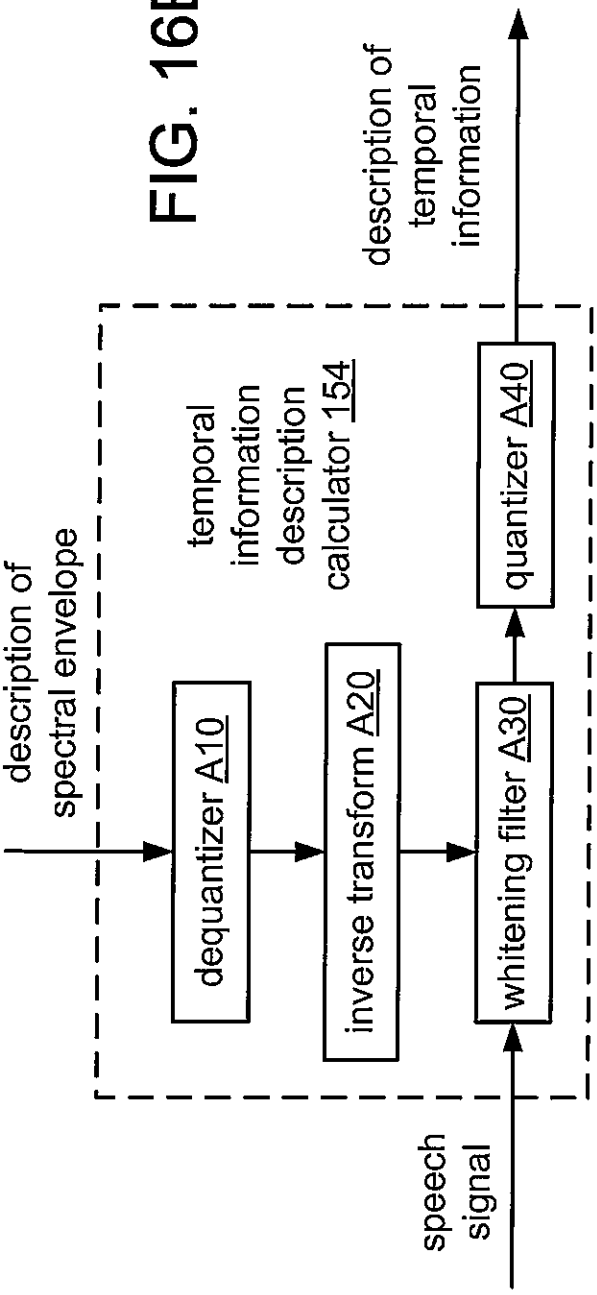

FIG. 16B

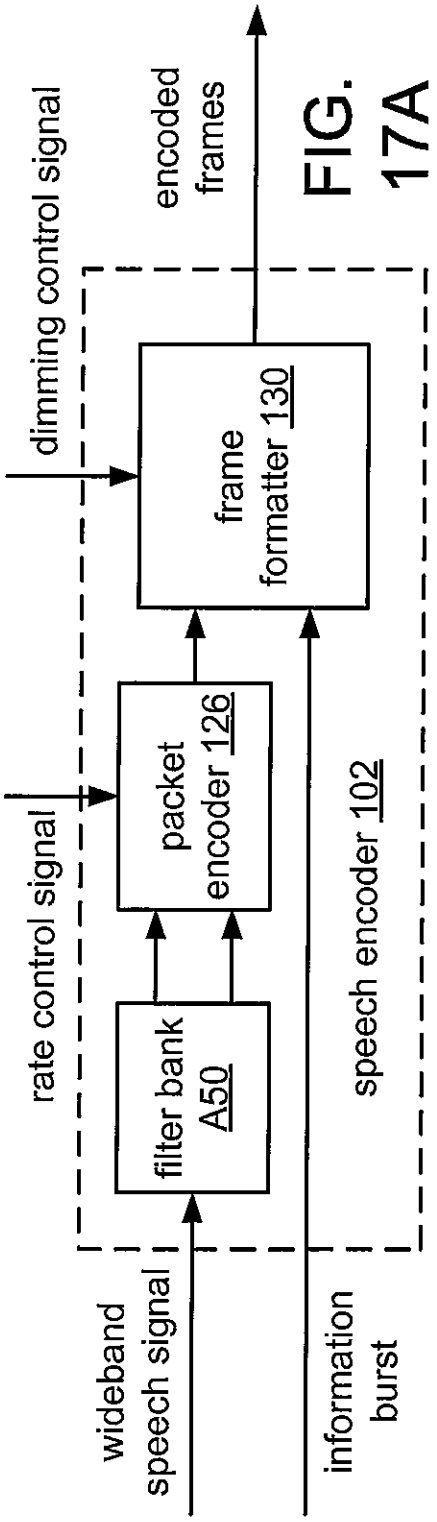

FIG. 17A

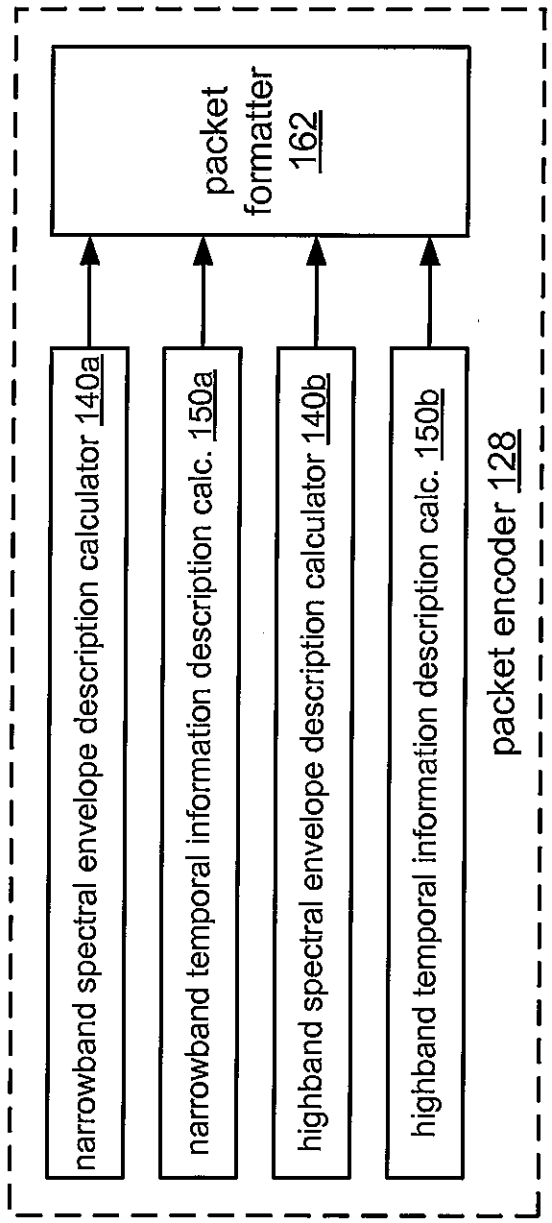

FIG. 17B

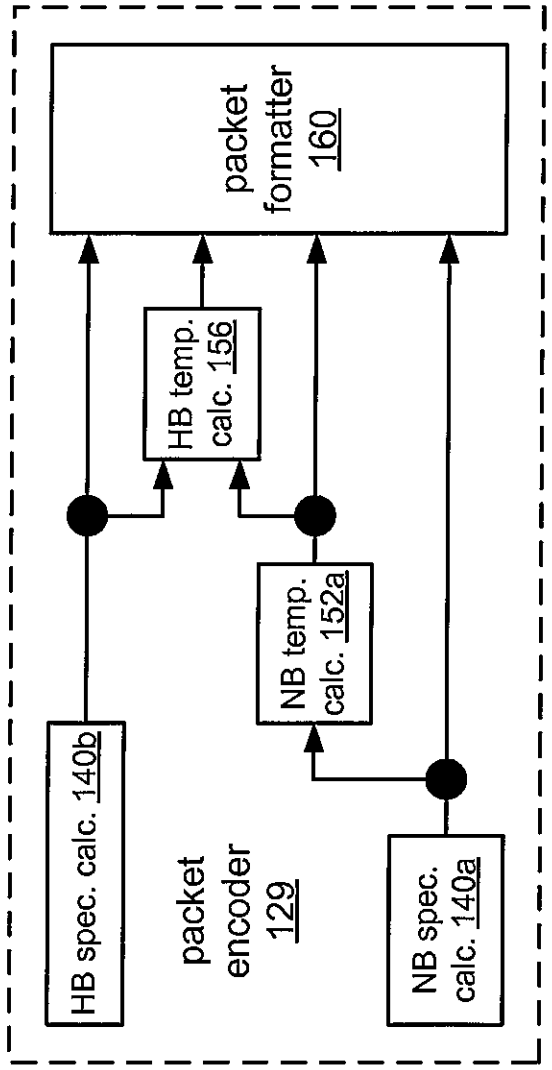

FIG. 18A

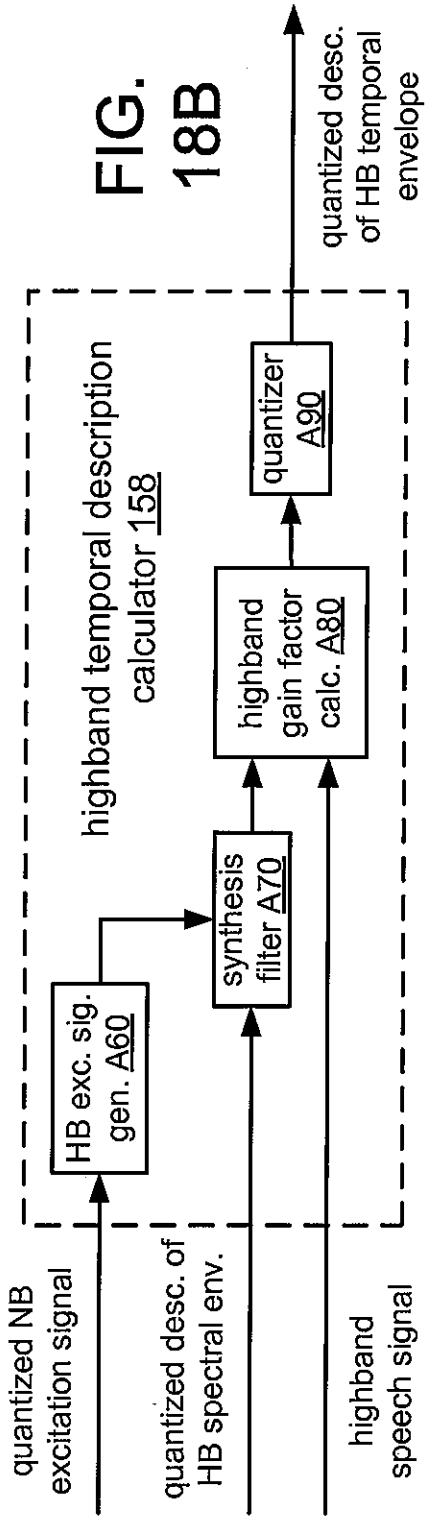

FIG. 18B

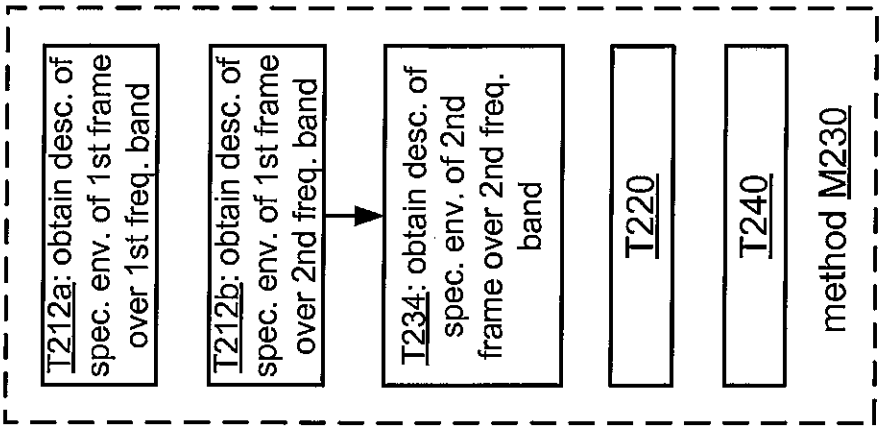

FIG. 19C

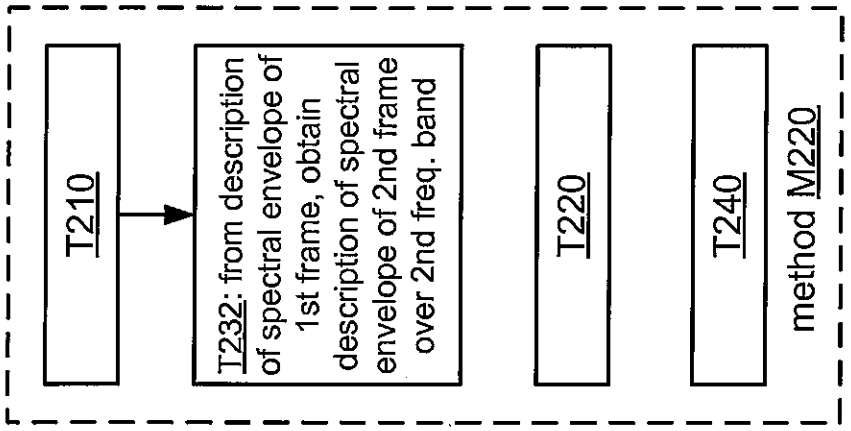

FIG. 19B

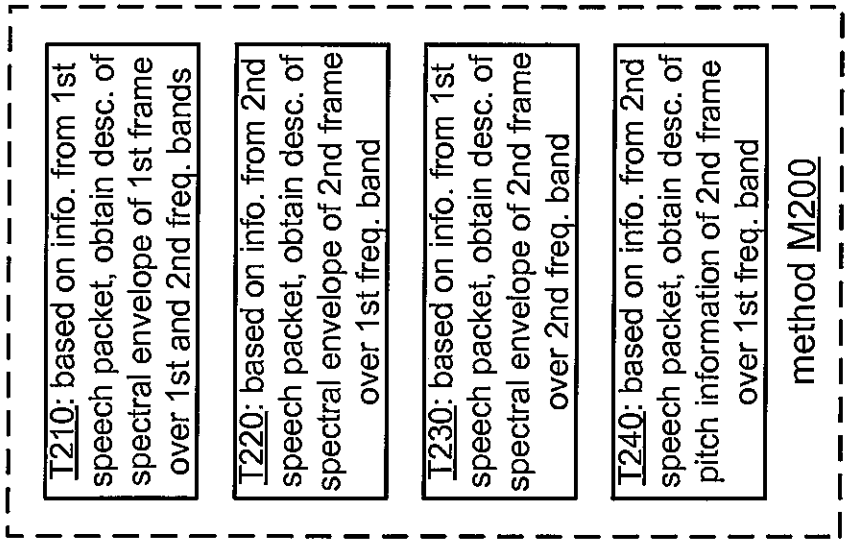

FIG. 19A

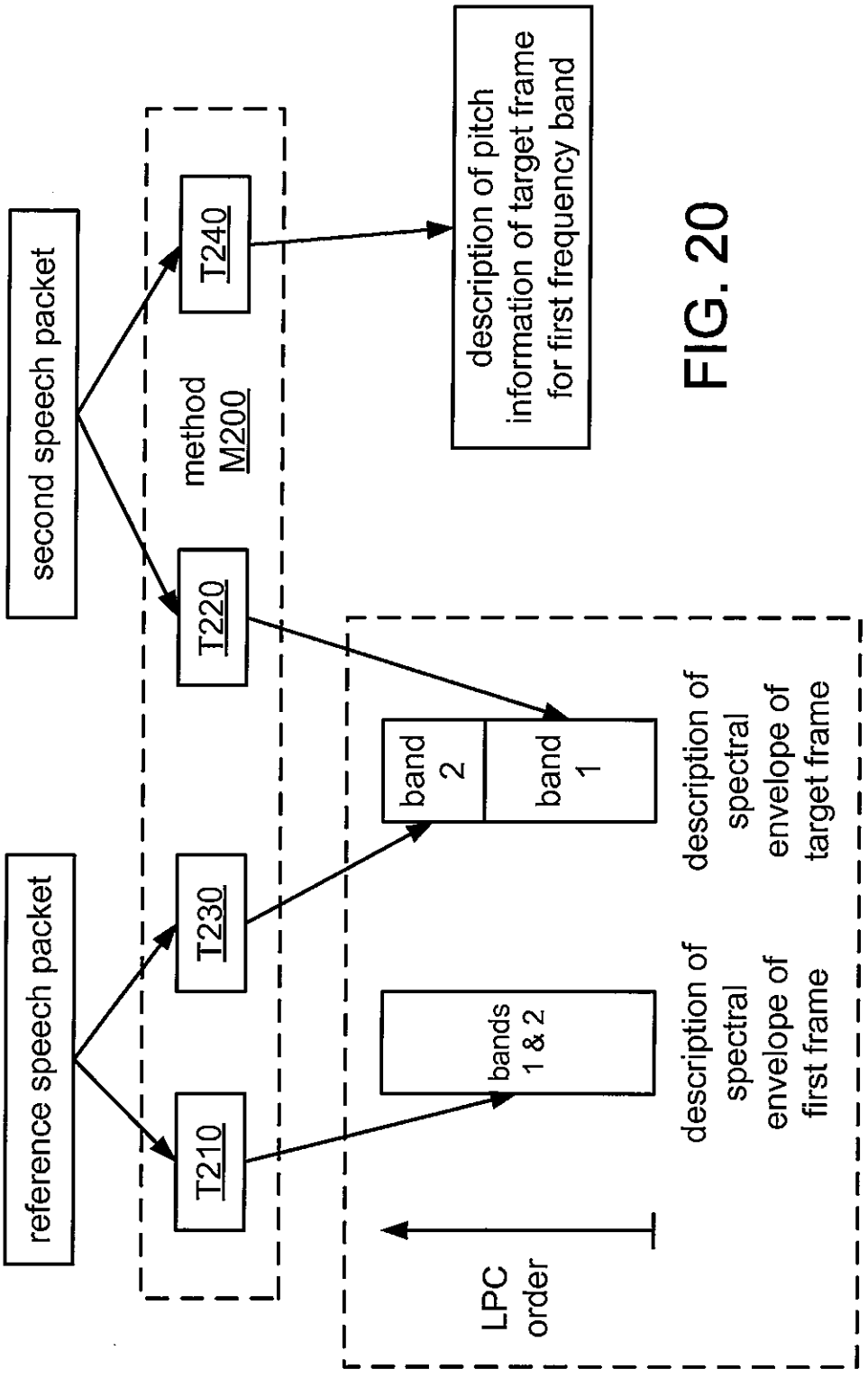
reference speech packet
second speech packet
T210
T230
T220
T240
method M200
bands 1 & 2
band 2
band 1
description of pitch information of target frame for first frequency band
description of spectral envelope of first frame
description of spectral envelope of target frame
LPC order

FIG. 20

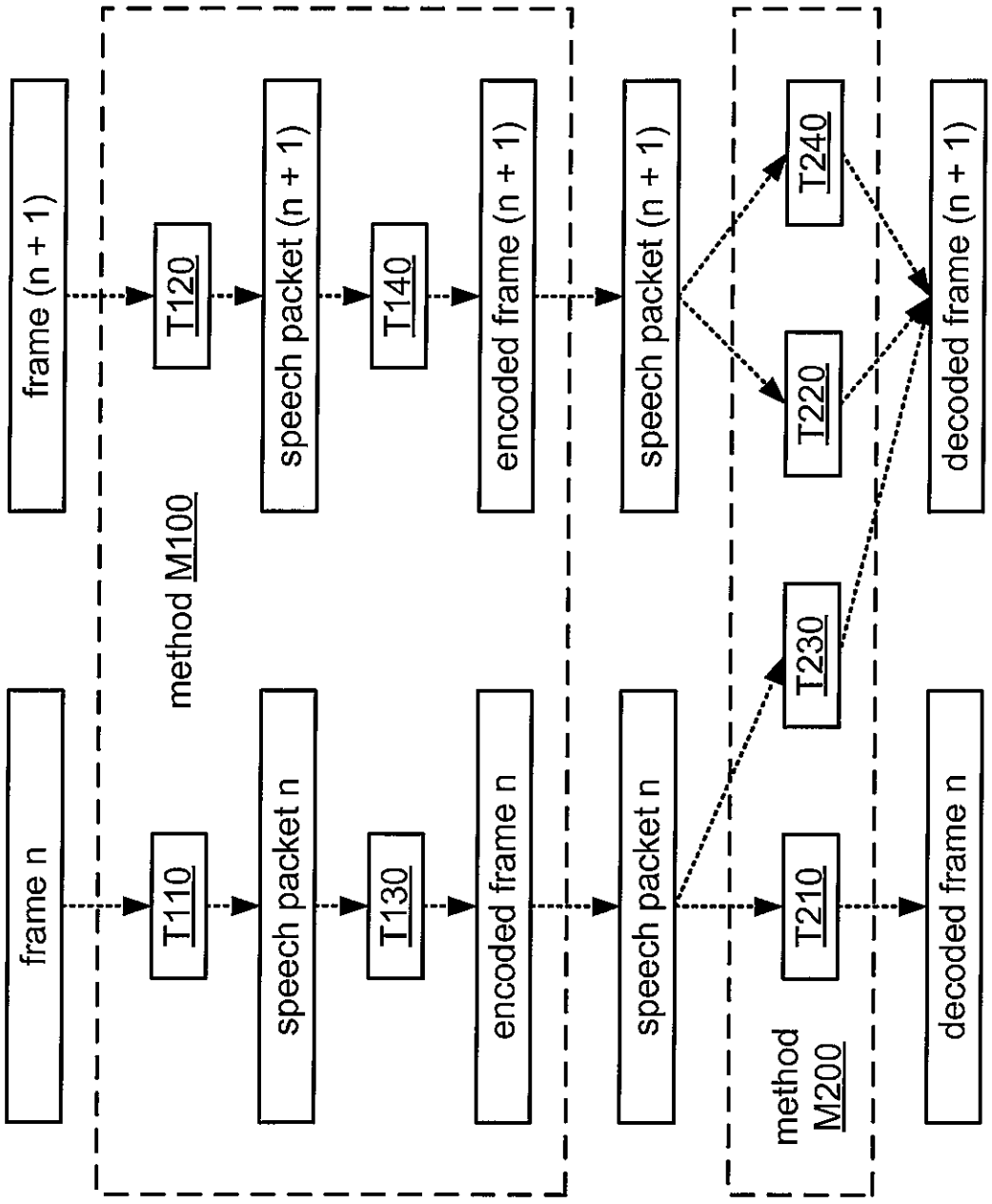
frame (n + 1)
T120
speech packet (n + 1)
T140
encoded frame (n + 1)
speech packet (n + 1)
T240
T220
decoded frame (n + 1)
method M100
frame n
T110
speech packet n
T130
encoded frame n
speech packet n
T230
T210
decoded frame n
method M200

FIG. 21

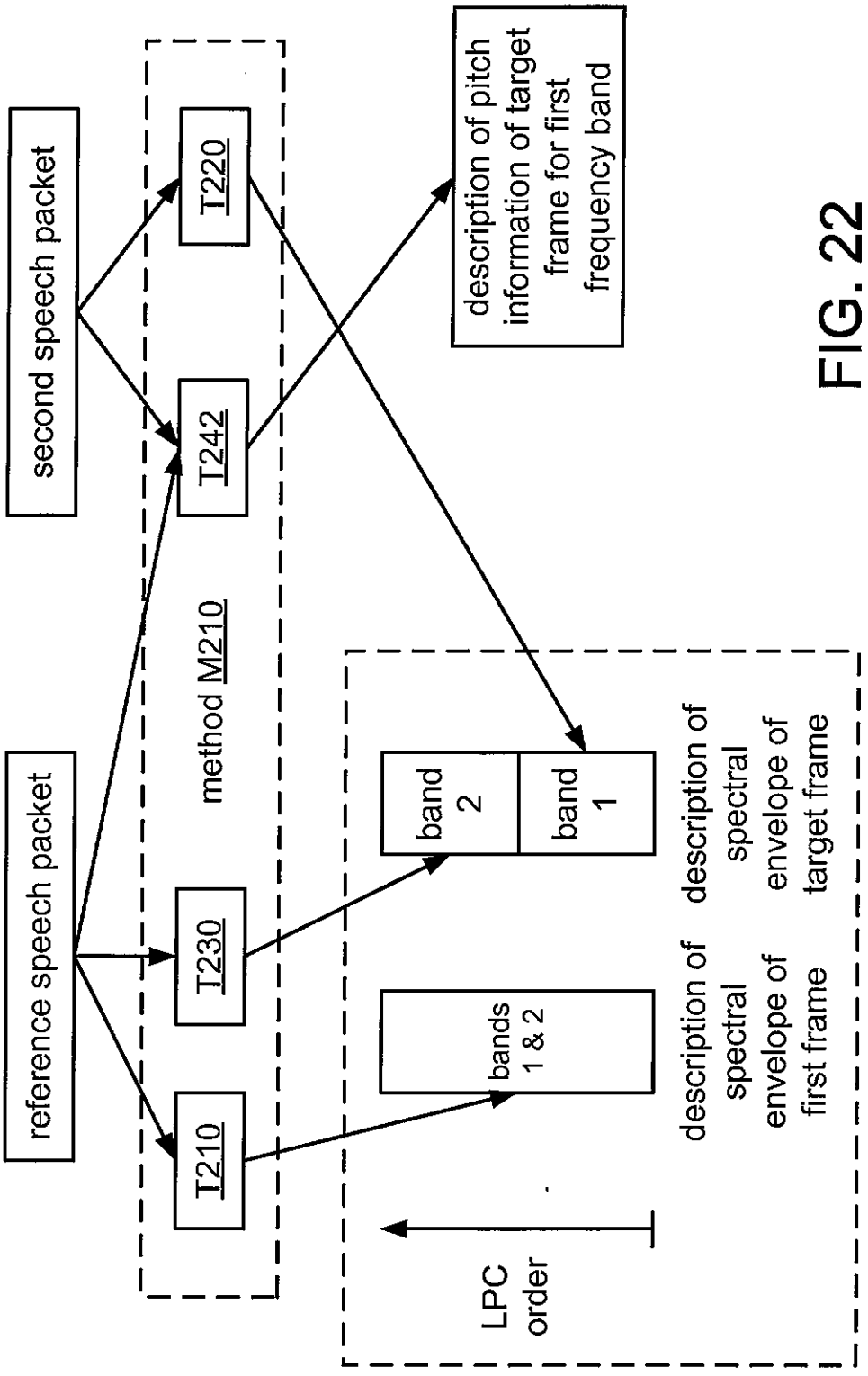
second speech packet
reference speech packet
T220
T242
T230
T210
method M210
description of pitch information of target frame for first frequency band
band 2
band 1
bands 1 & 2
description of spectral envelope of target frame
description of spectral envelope of first frame
LPC order

FIG. 22

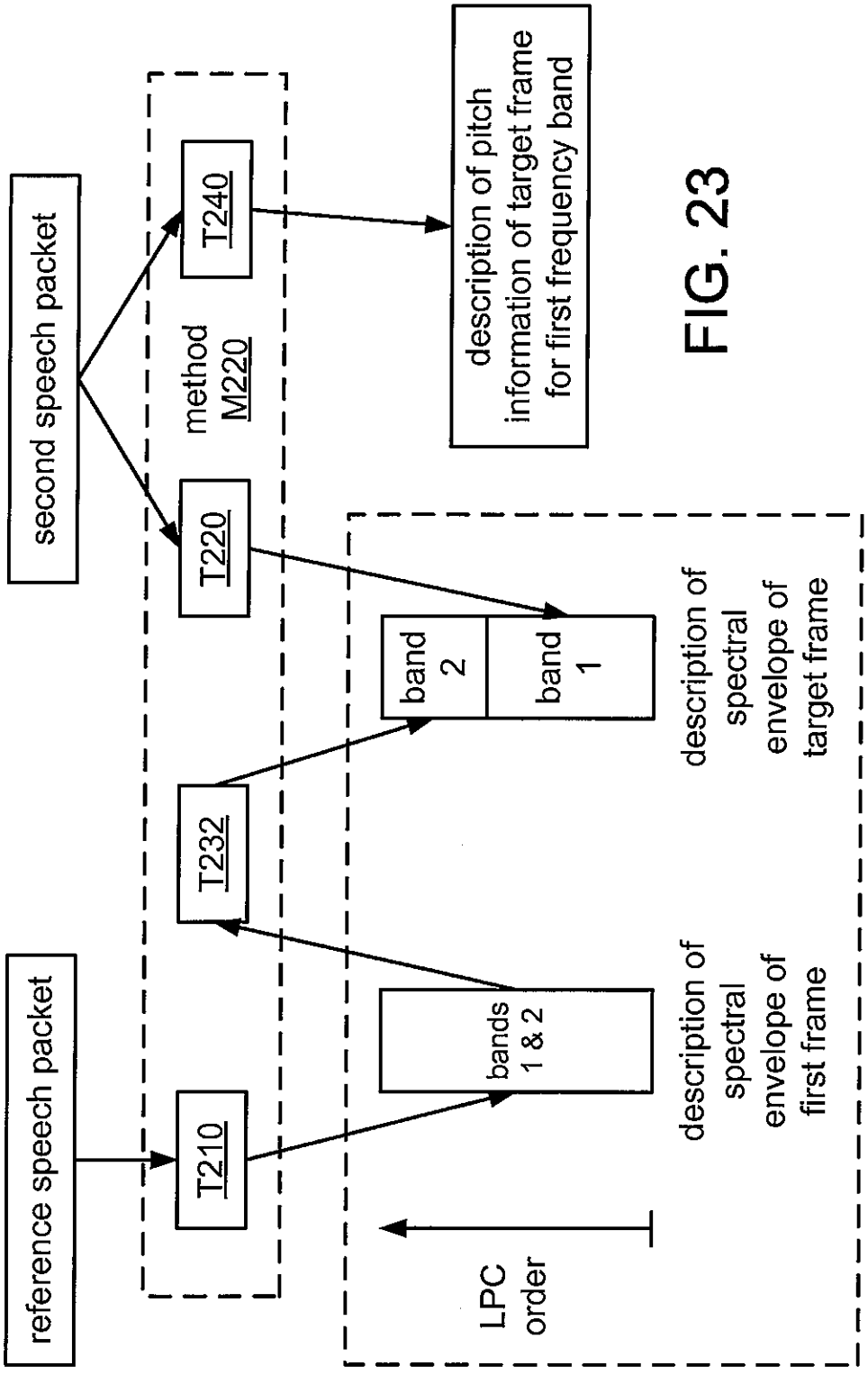
reference speech packet
second speech packet
T210
T220
T232
T240
method M220
bands 1 & 2
band 2
band 1
description of pitch information of target frame for first frequency band
description of spectral envelope of first frame
description of spectral envelope of target frame
LPC order

FIG. 23

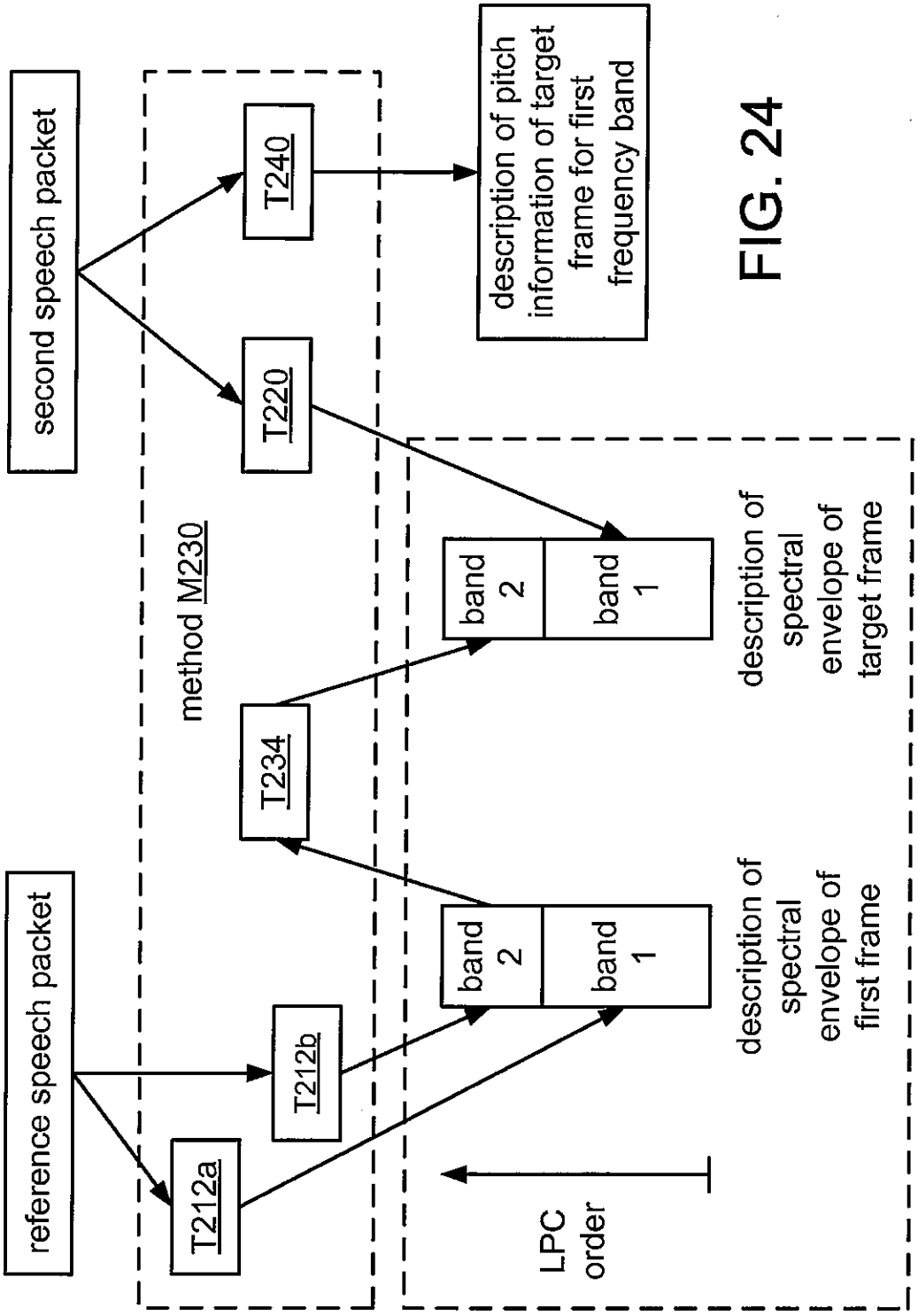
second speech packet
T240
description of pitch information of target frame for first frequency band
T220
method M230
band 2
band 1
description of spectral envelope of target frame
T234
reference speech packet
T212b
band 2
band 1
description of spectral envelope of first frame
T212a
LPC order

FIG. 24

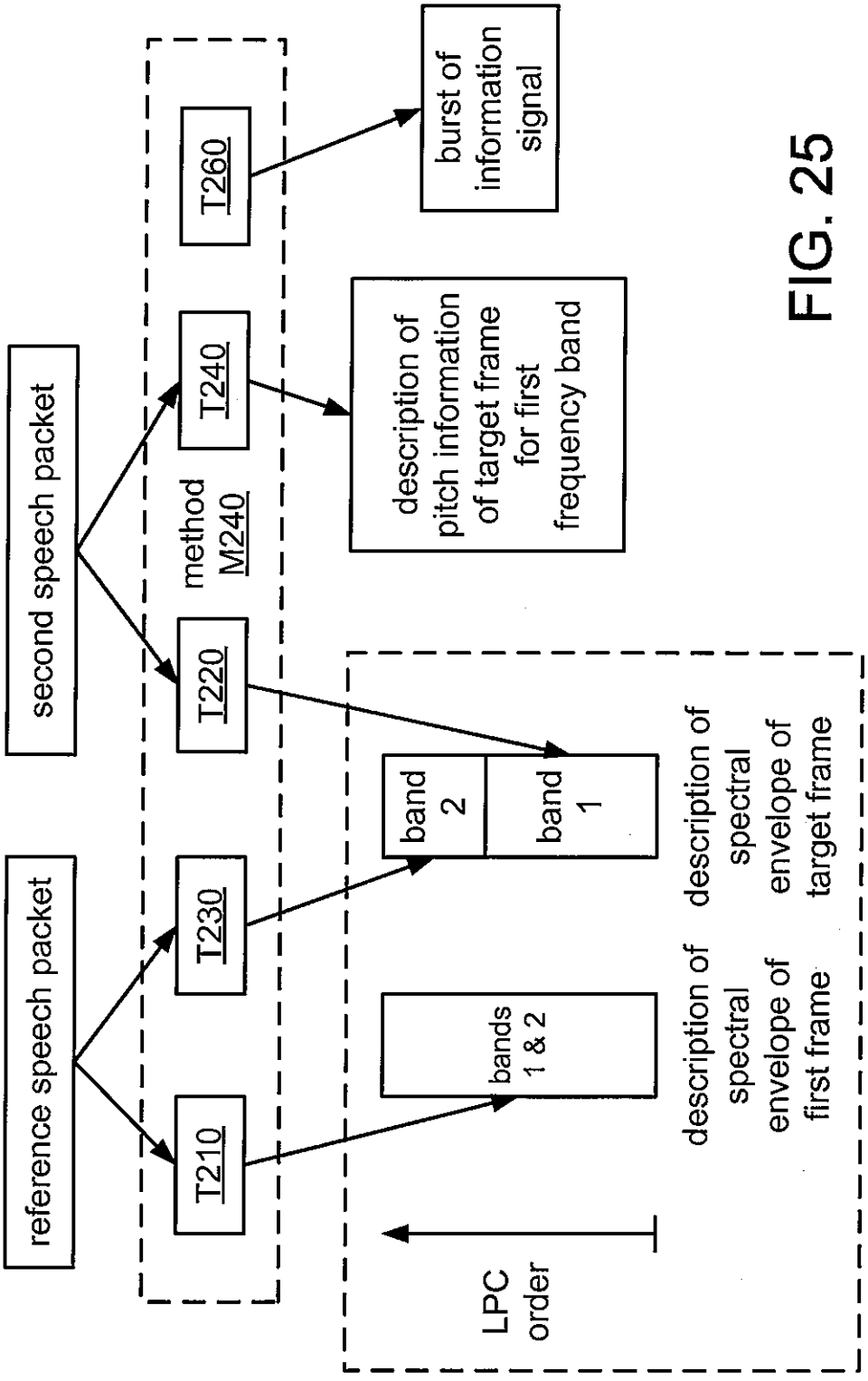
reference speech packet
second speech packet
T210
T220
T230
T240
T260
method M240
LPC order
bands 1 & 2
band 2
band 1
description of spectral envelope of first frame
description of spectral envelope of target frame
description of pitch information of target frame for first frequency band
burst of information signal

FIG. 25

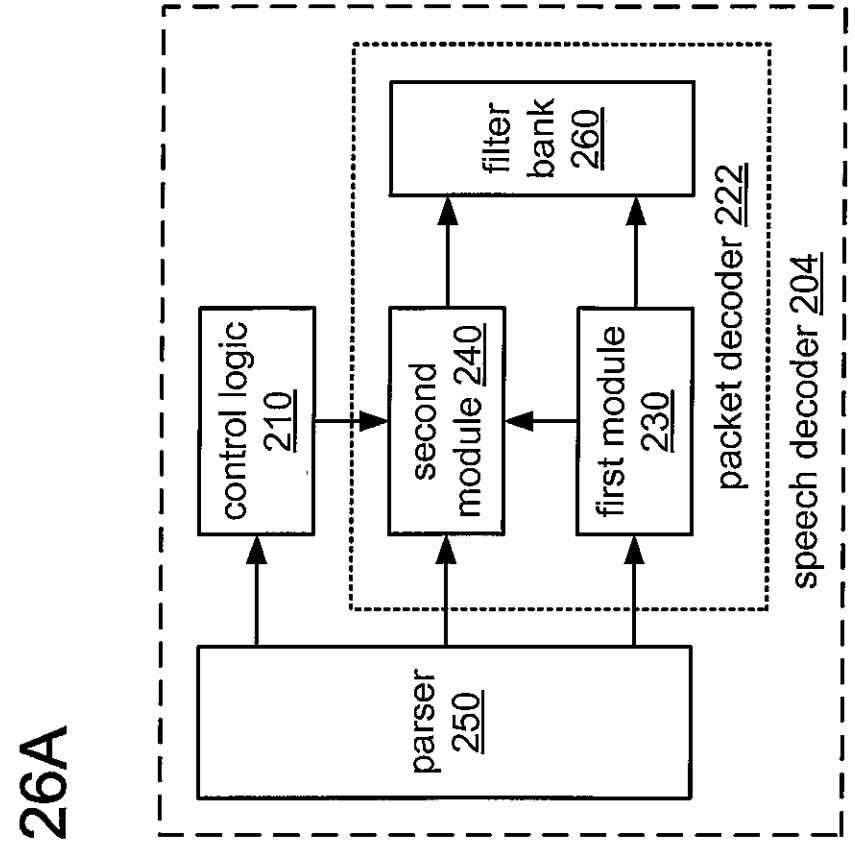

FIG. 26C

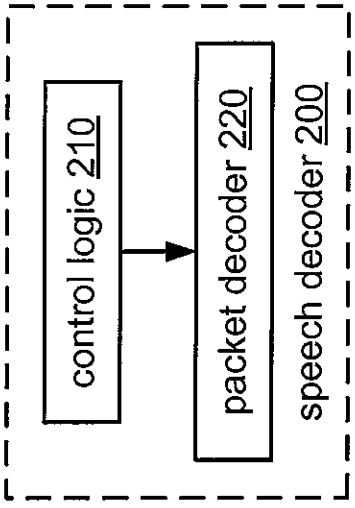

FIG. 26A

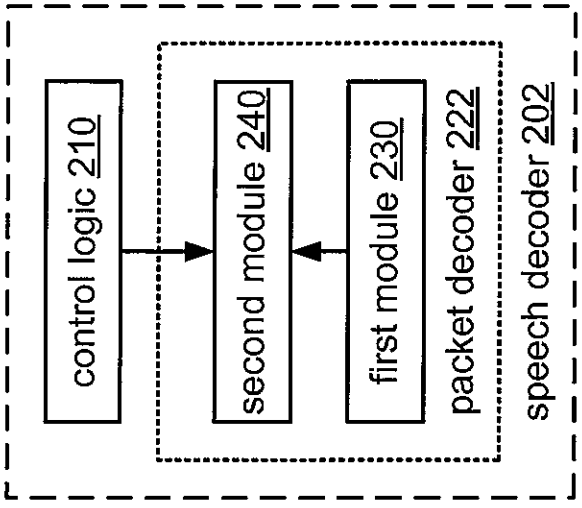

FIG. 26B

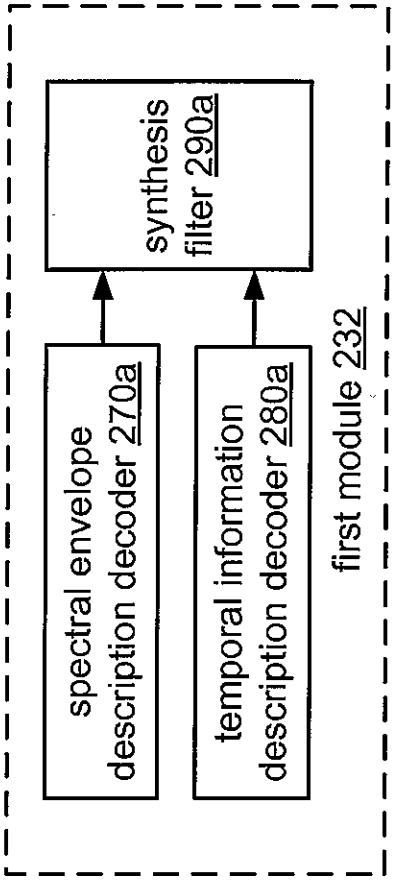

FIG. 27A

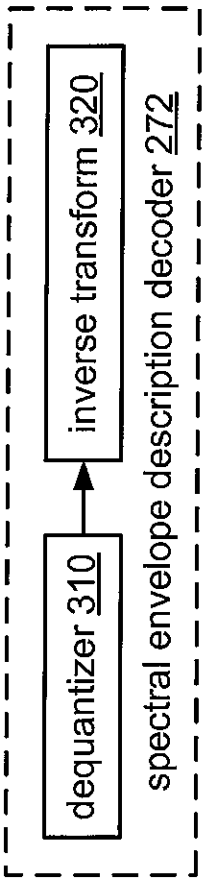

FIG. 27B

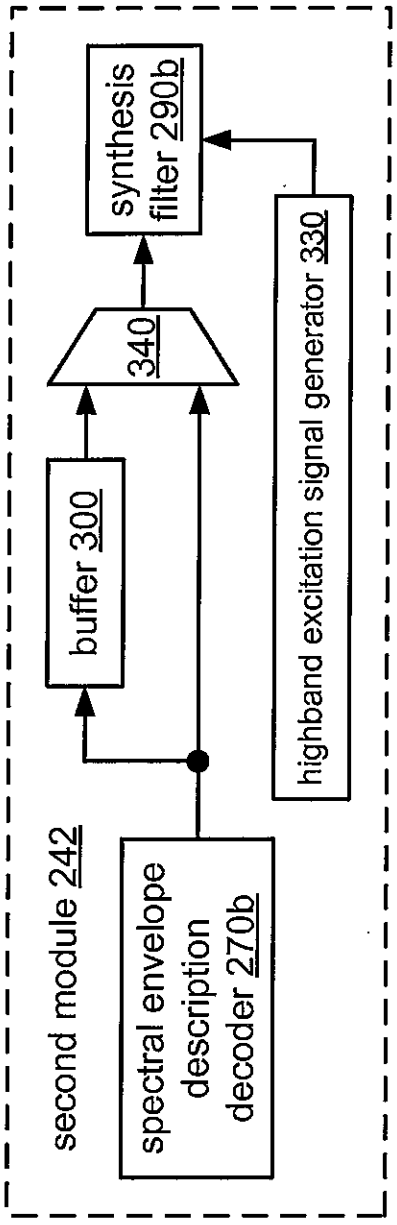

FIG. 28A

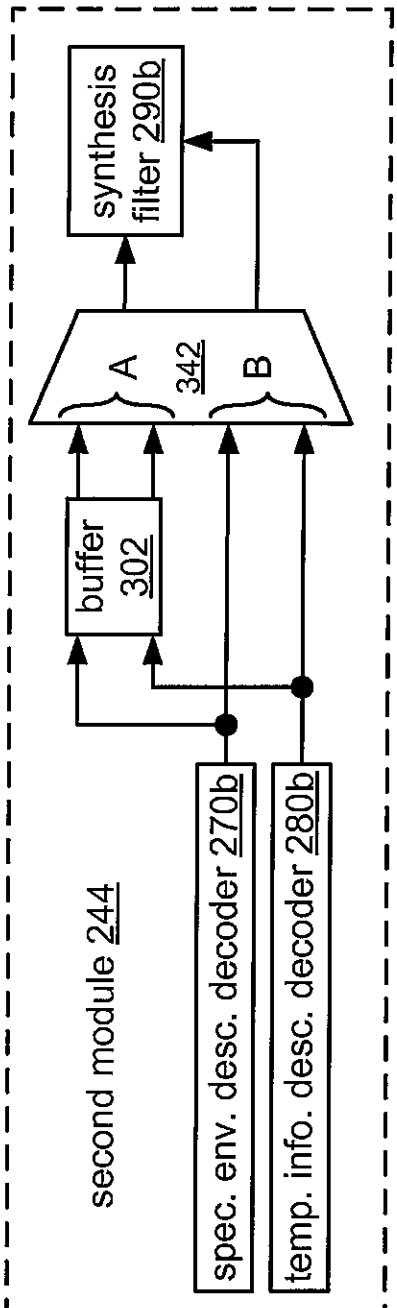

FIG. 28B

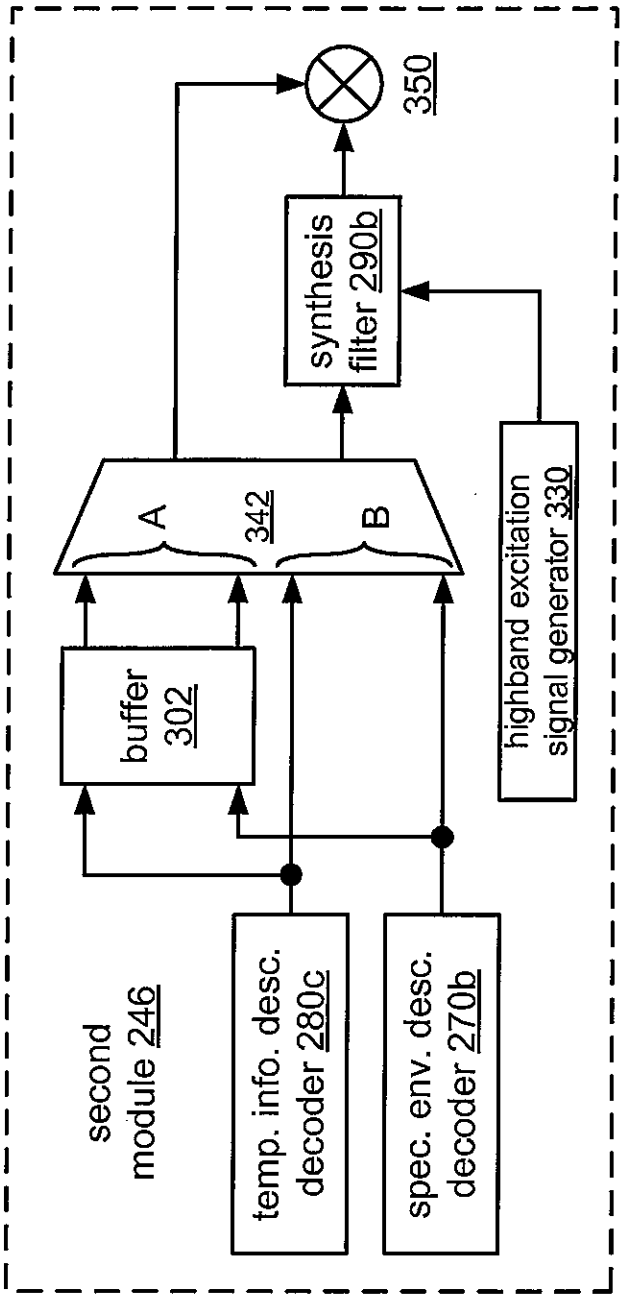

FIG. 28C