[Figure 7]

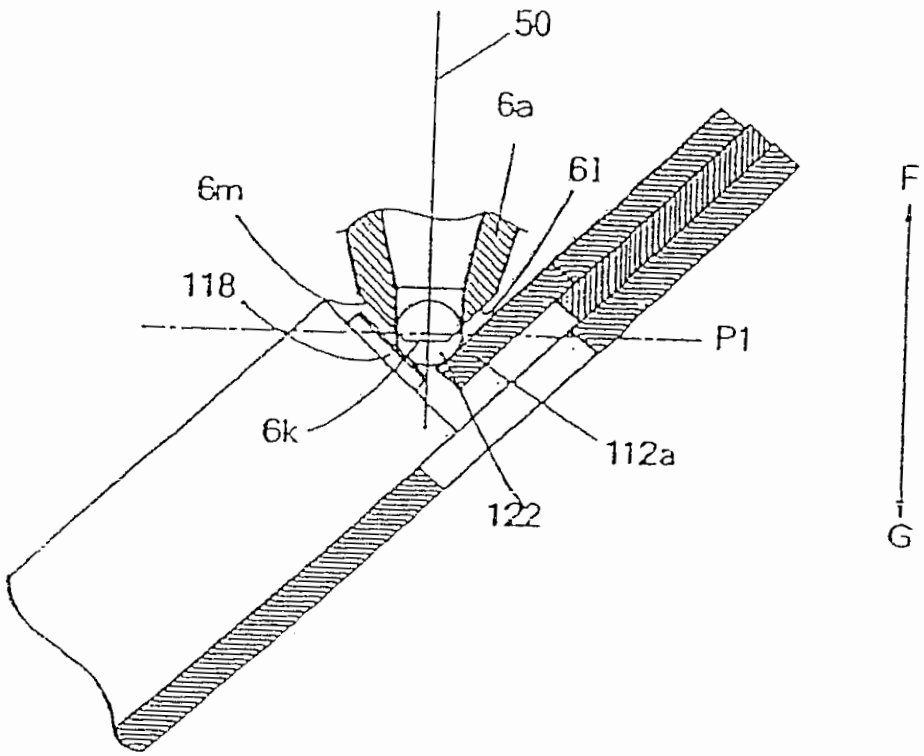

[Figure 8]

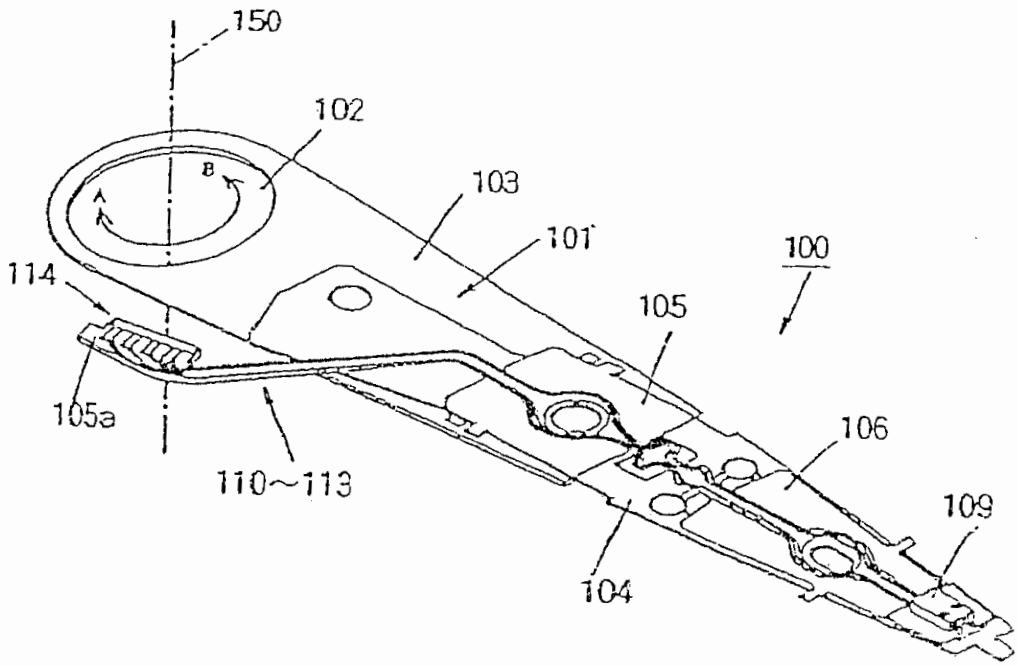

PRIOR ART

[Figure 9]

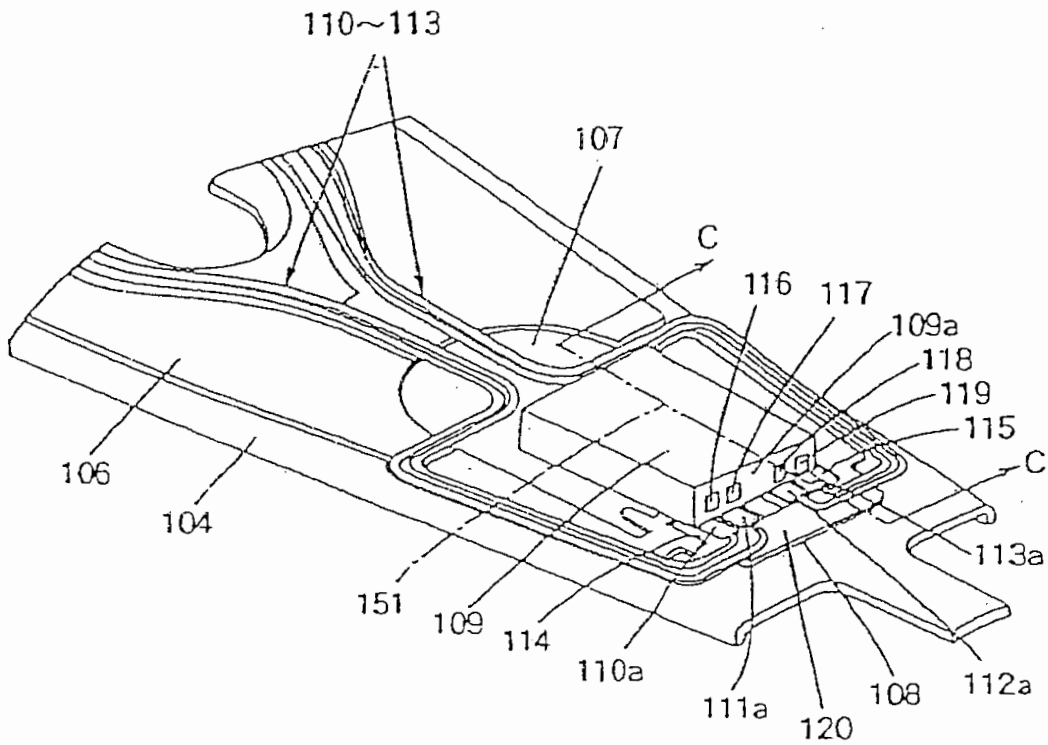

PRIOR ART

[Figure 10]

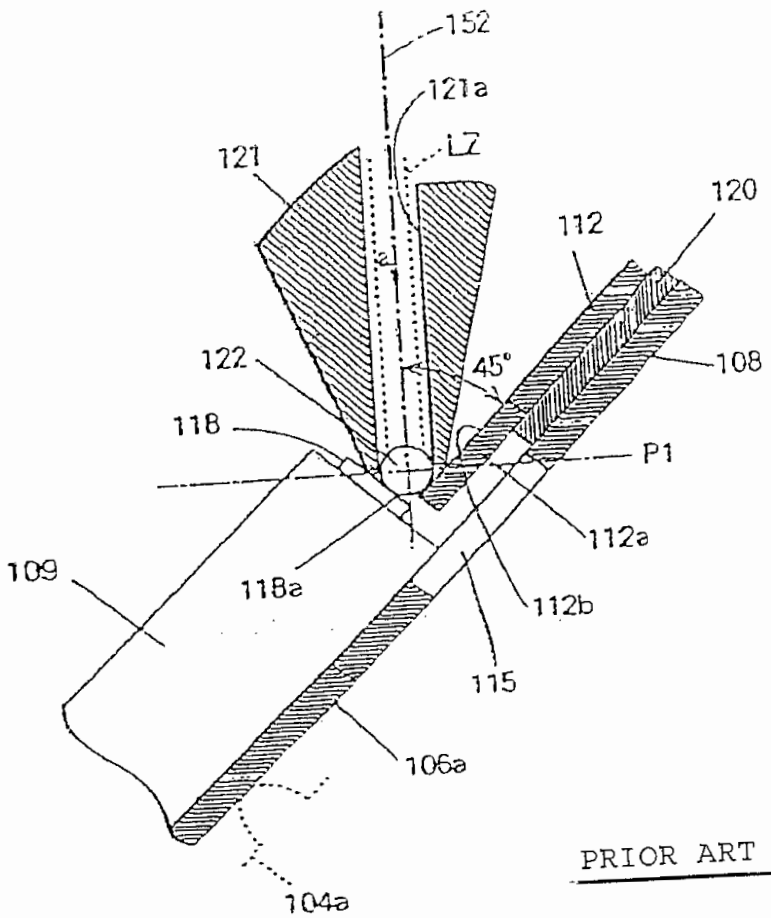

PRIOR ART

[Figure 11]

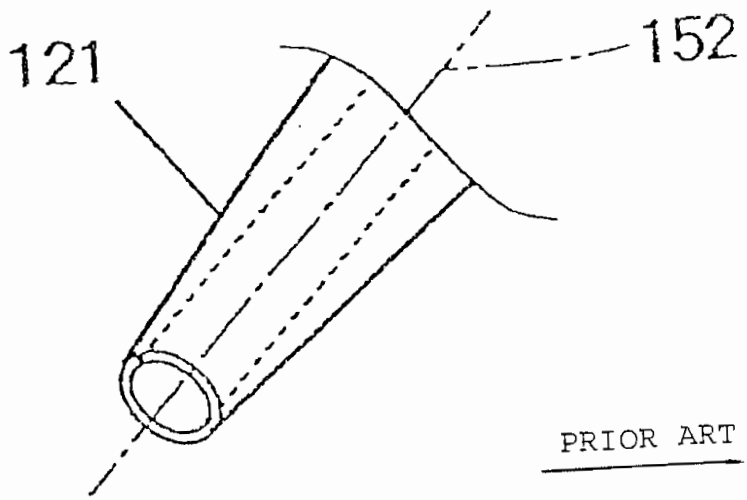

PRIOR ART