Figure 1A

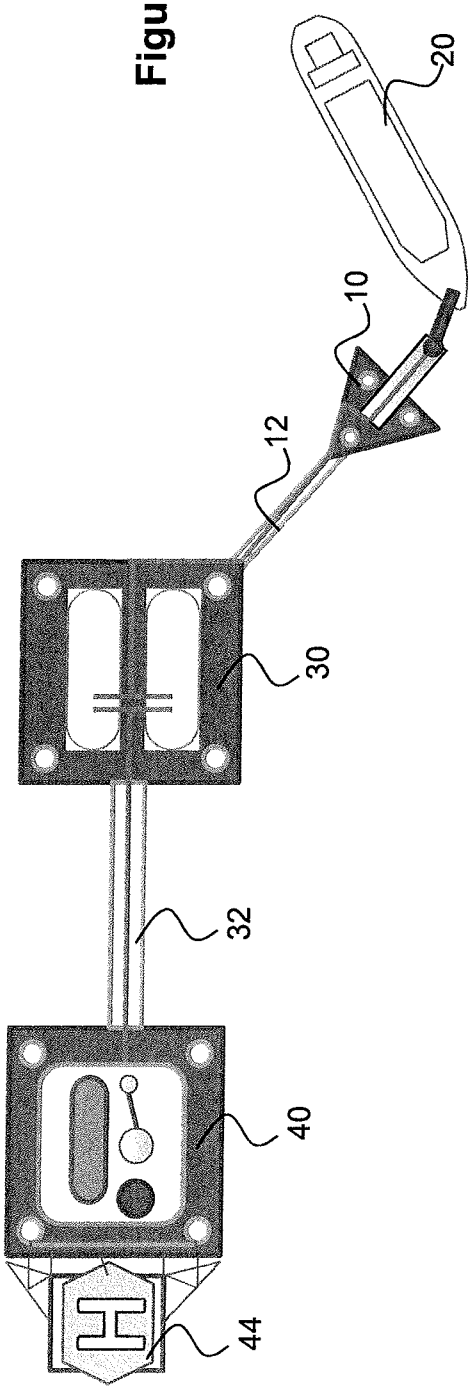

Figure 1B

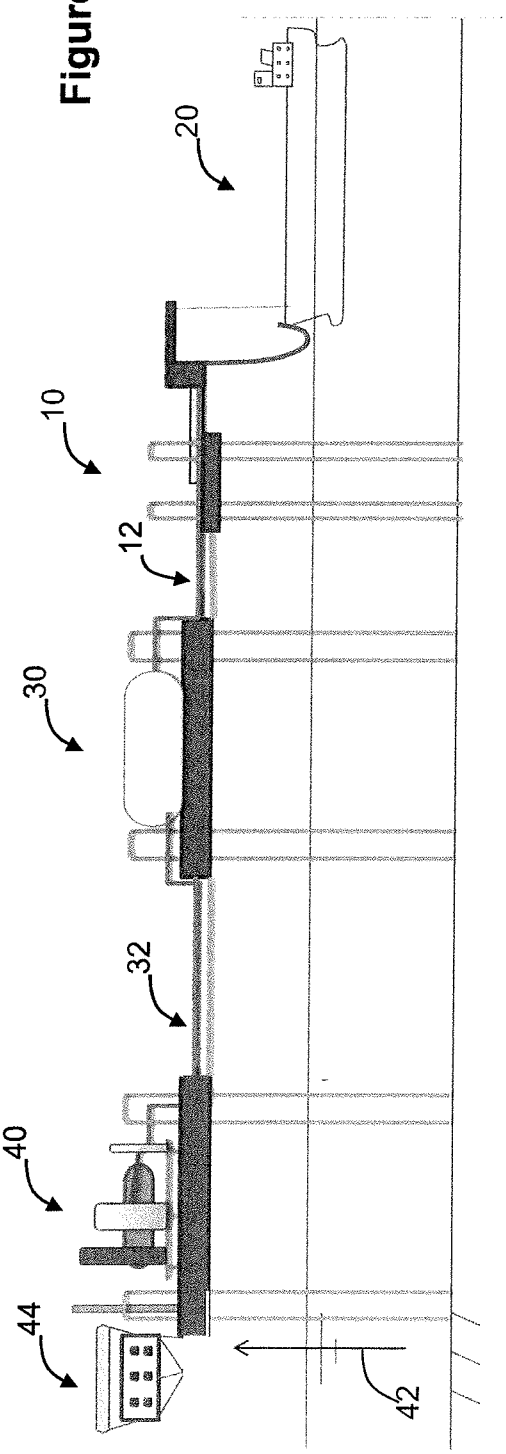

Figure 2A

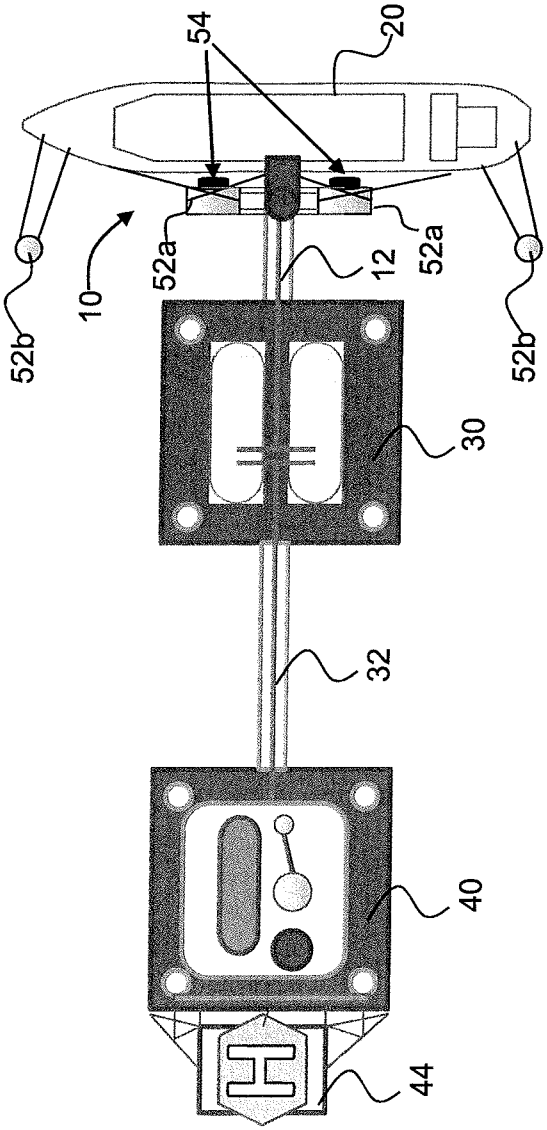

Figure 2B

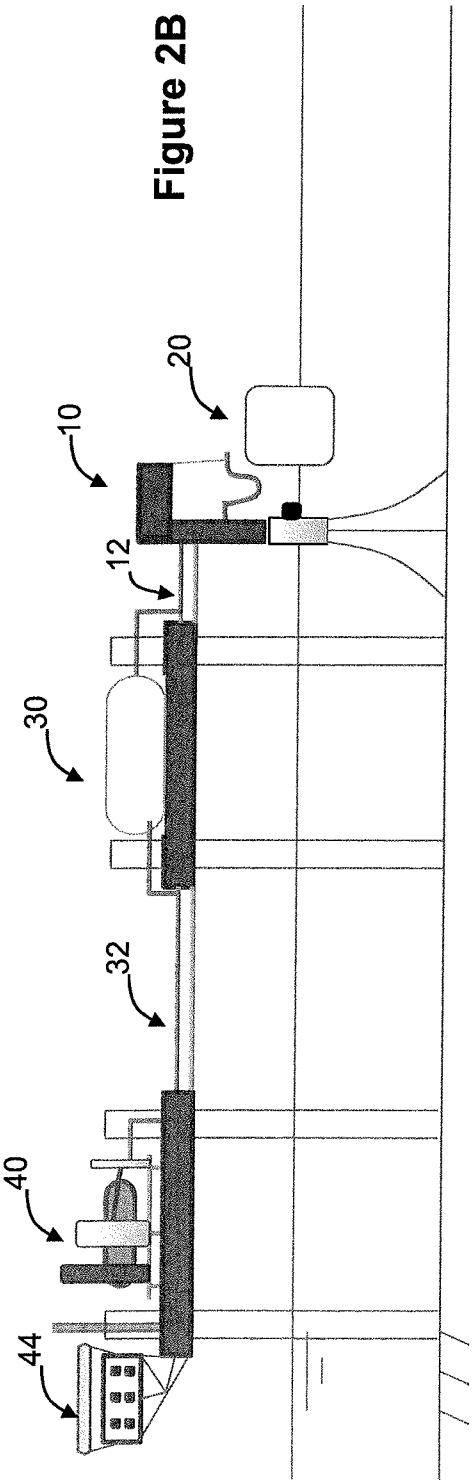

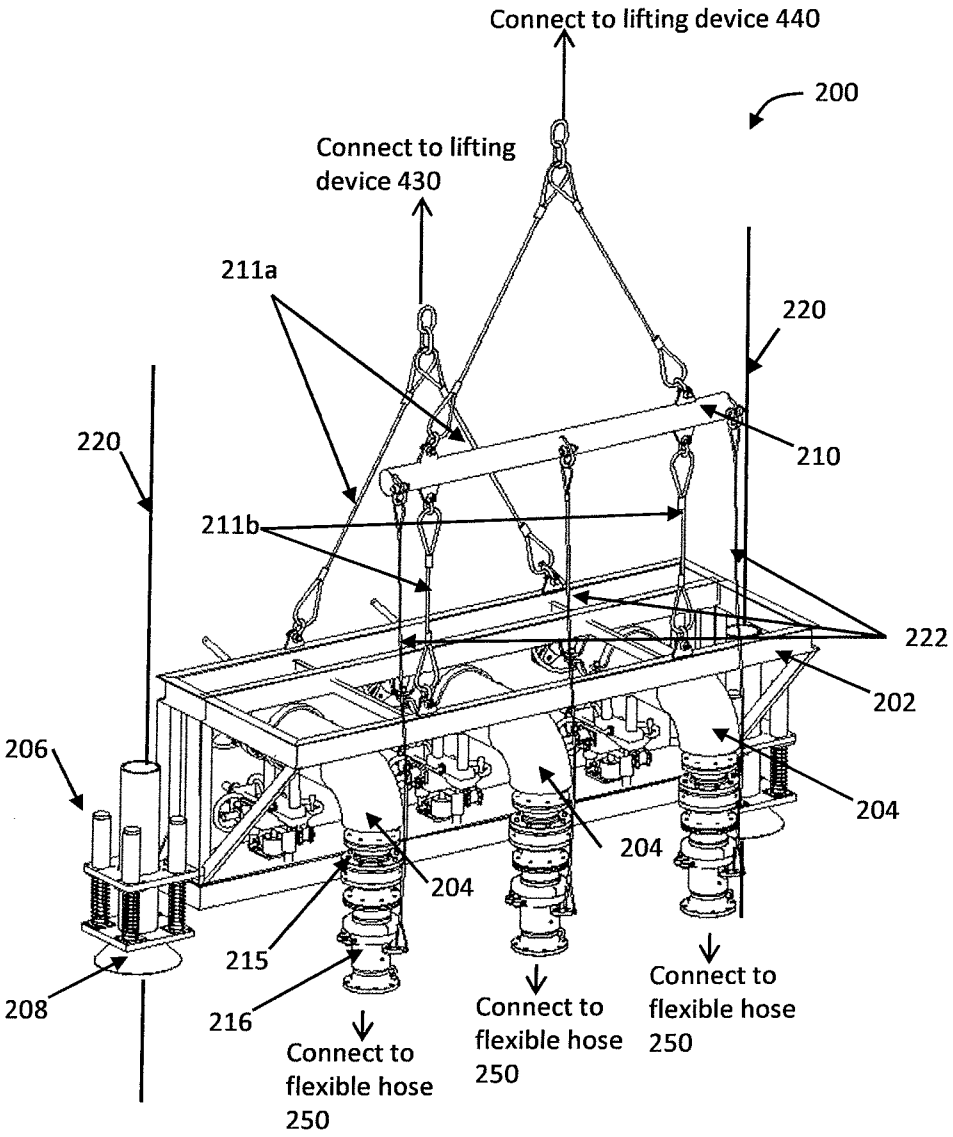
Connect to lifting device 440
200
Connect to lifting device 430
211a
220
220
210
211b
222
202
206
204
204
204
215
208
216
Connect to flexible hose 250
Connect to flexible hose 250
Connect to flexible hose 250

Figure 3A

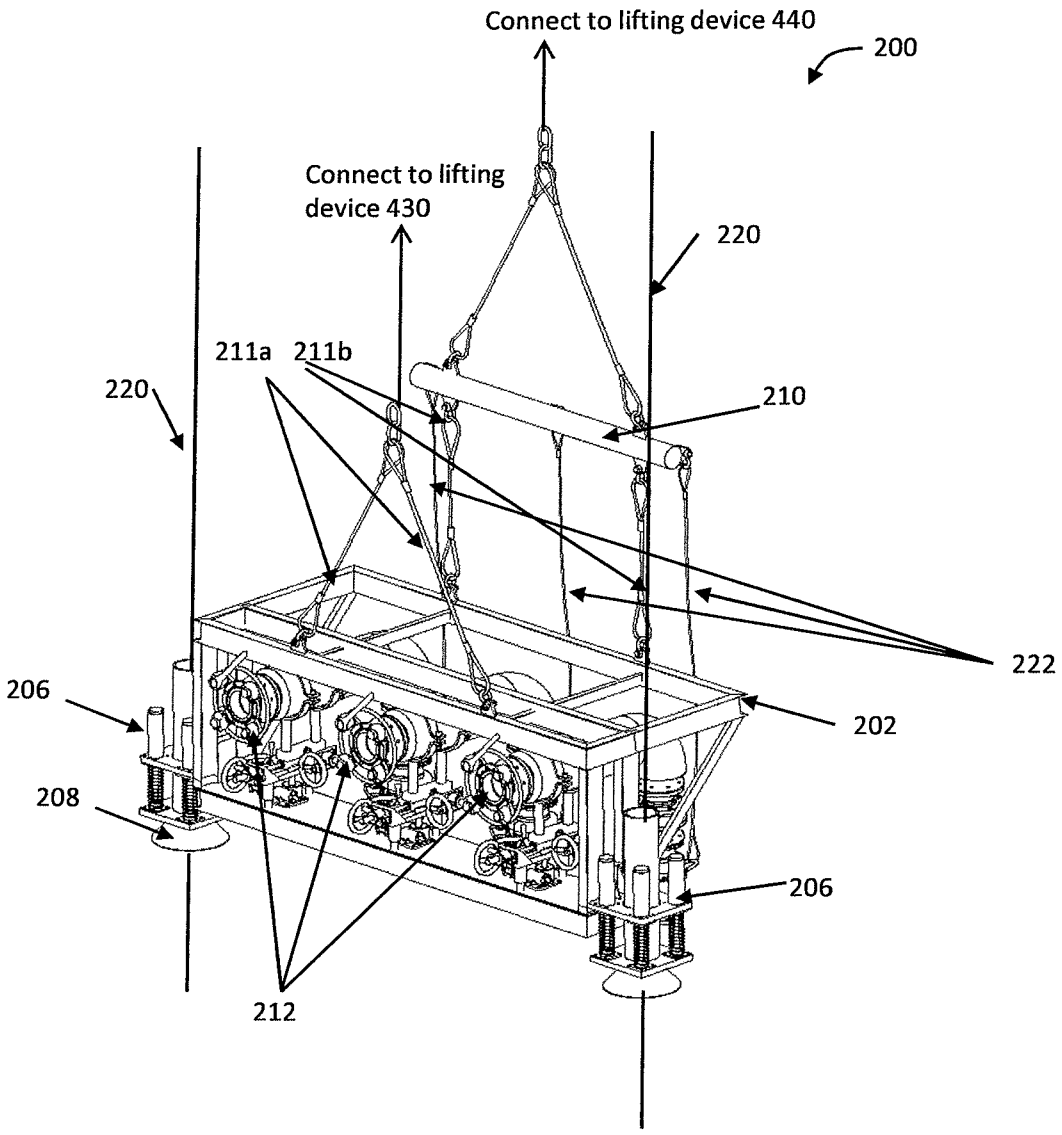
Connect to lifting device 440
200
Connect to lifting device 430
220
211a
211b
220
210
222
206
202
208
206
212

Figure 3B

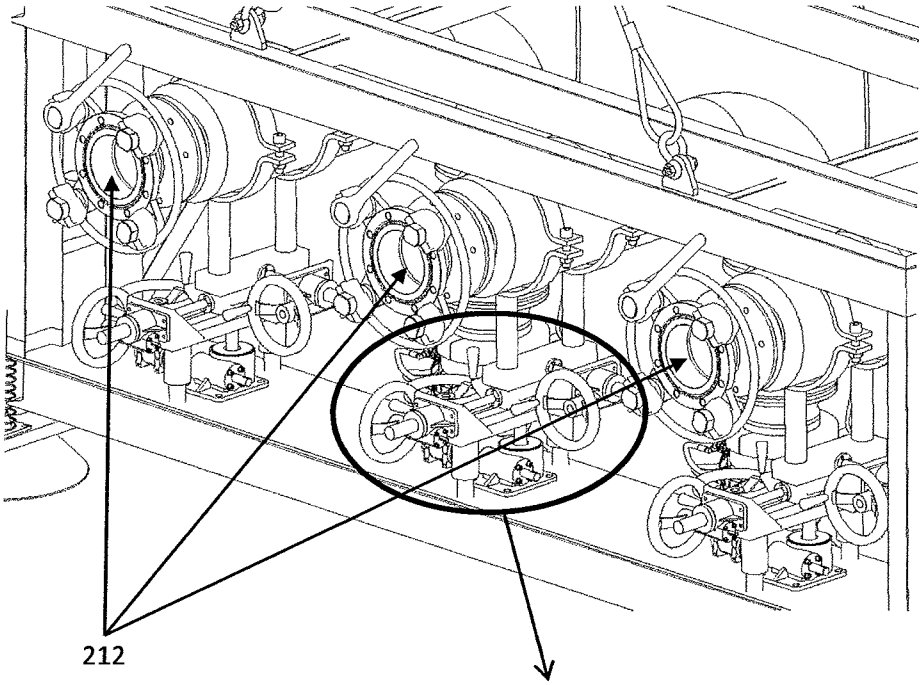

Figure 3C

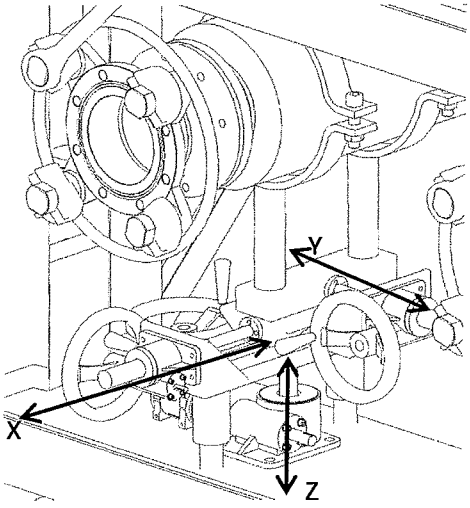

Figure 3D

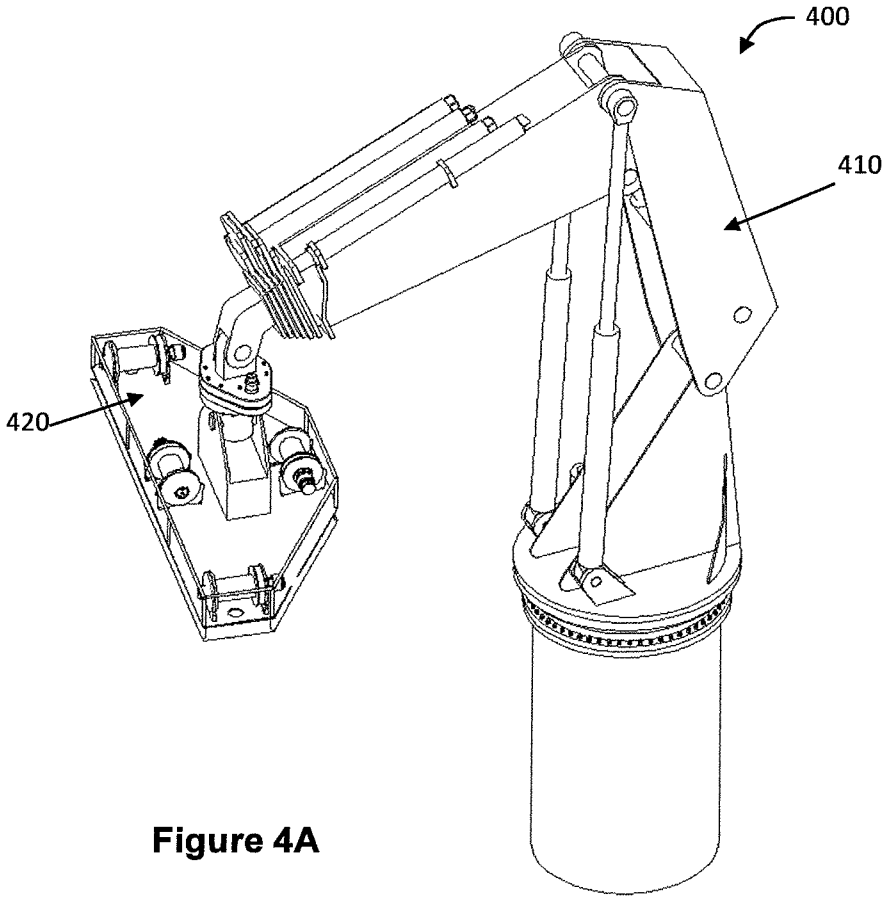

Figure 4A

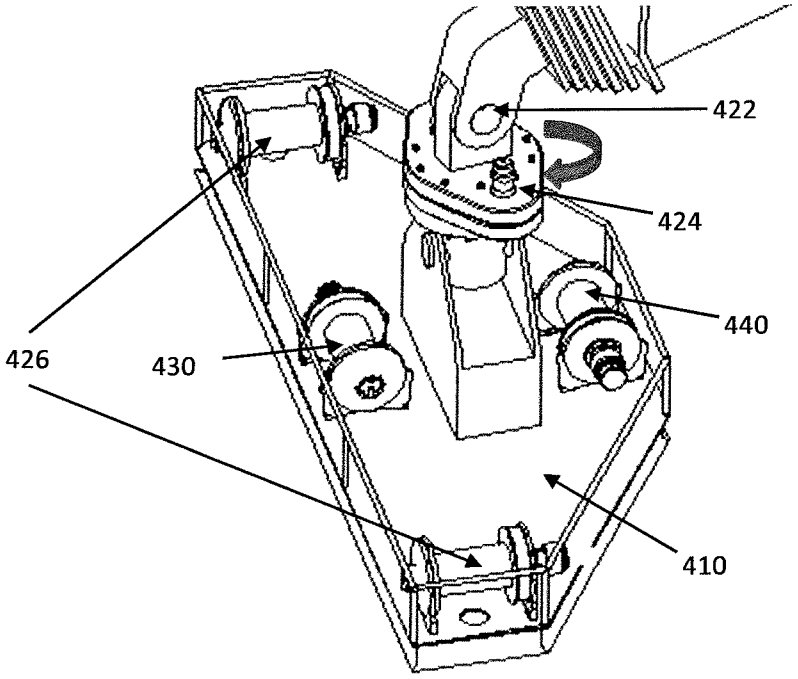

Figure 4B

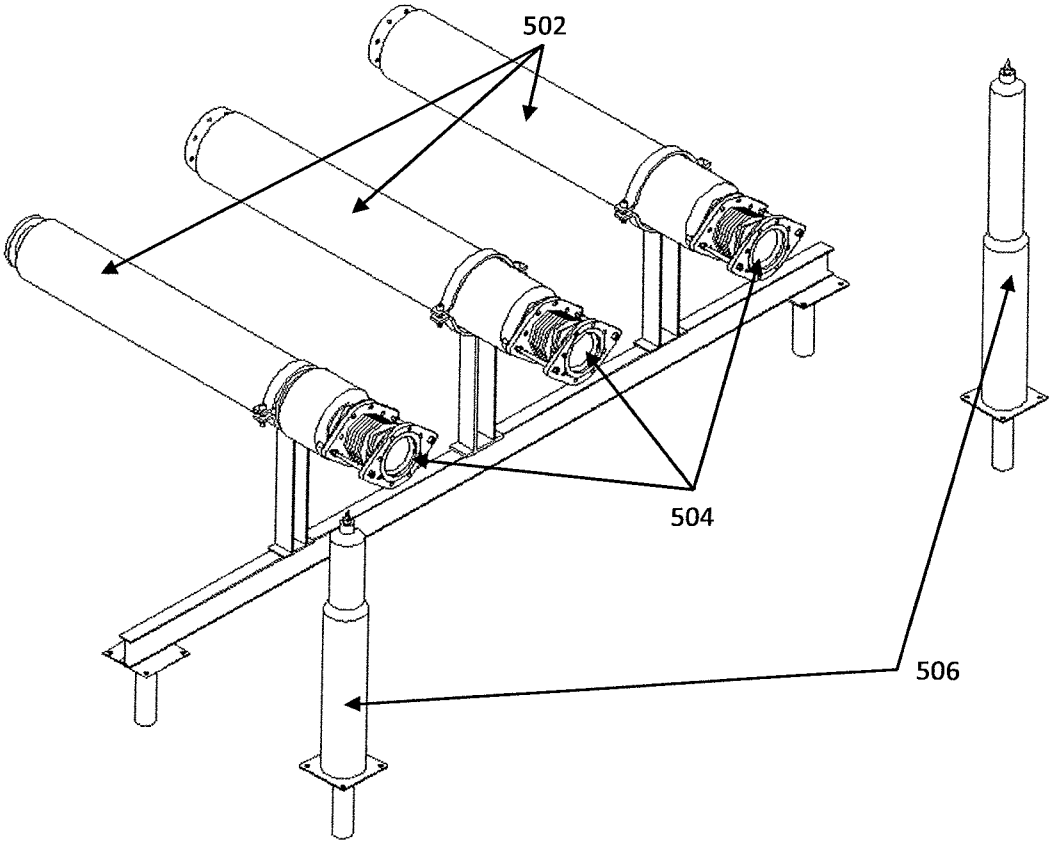

Figure 5

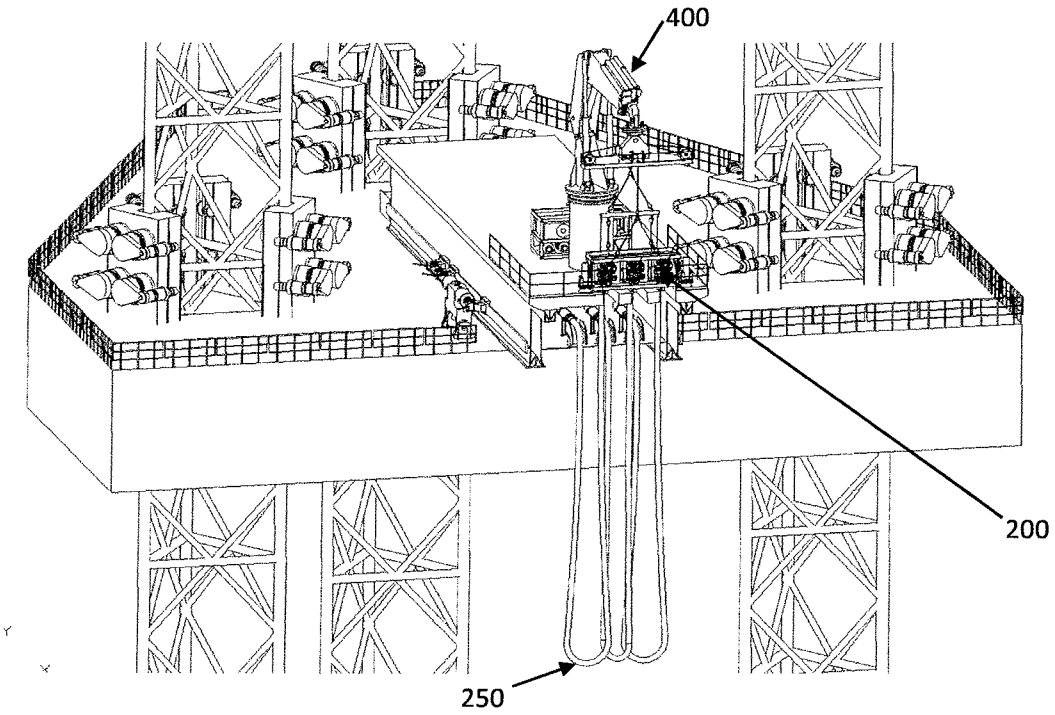

Figure 6A

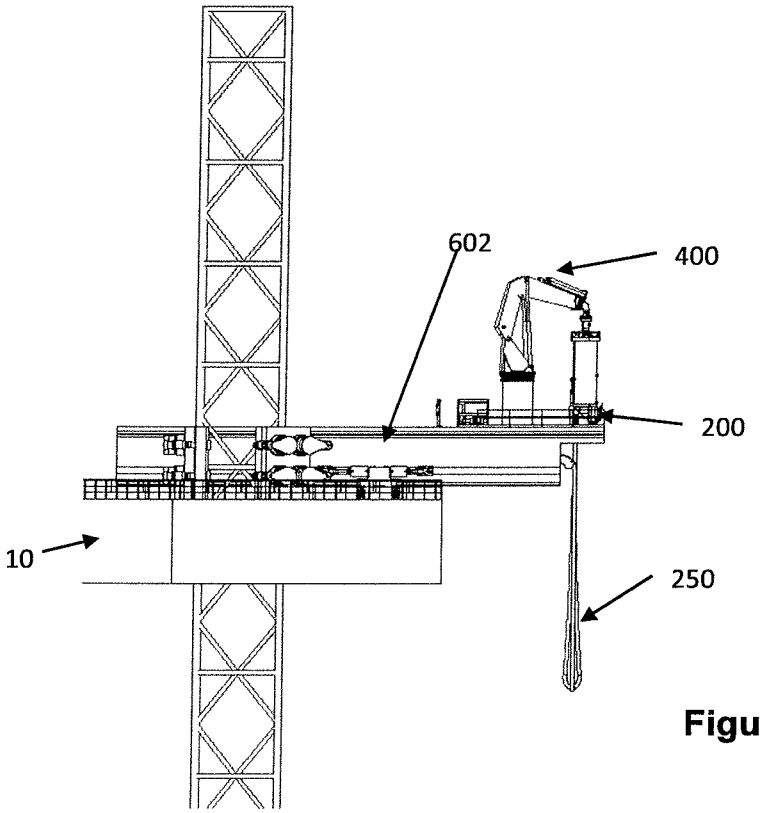

Figure 6B

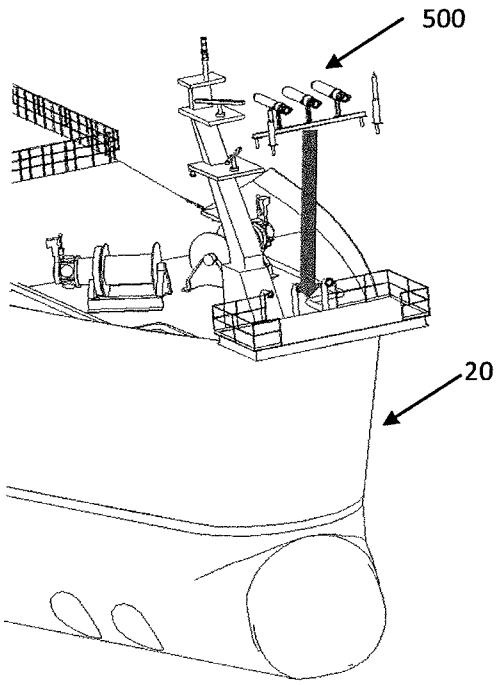

Figure 7A

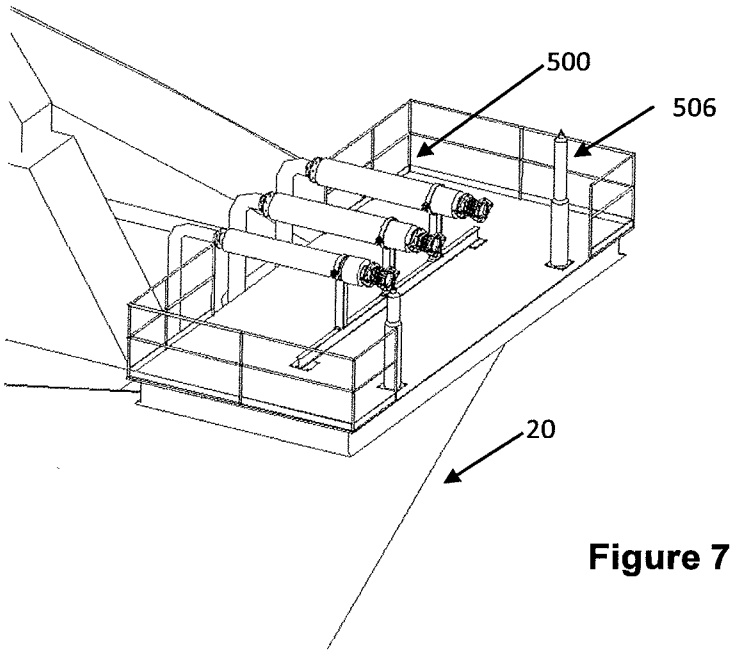

Figure 7B

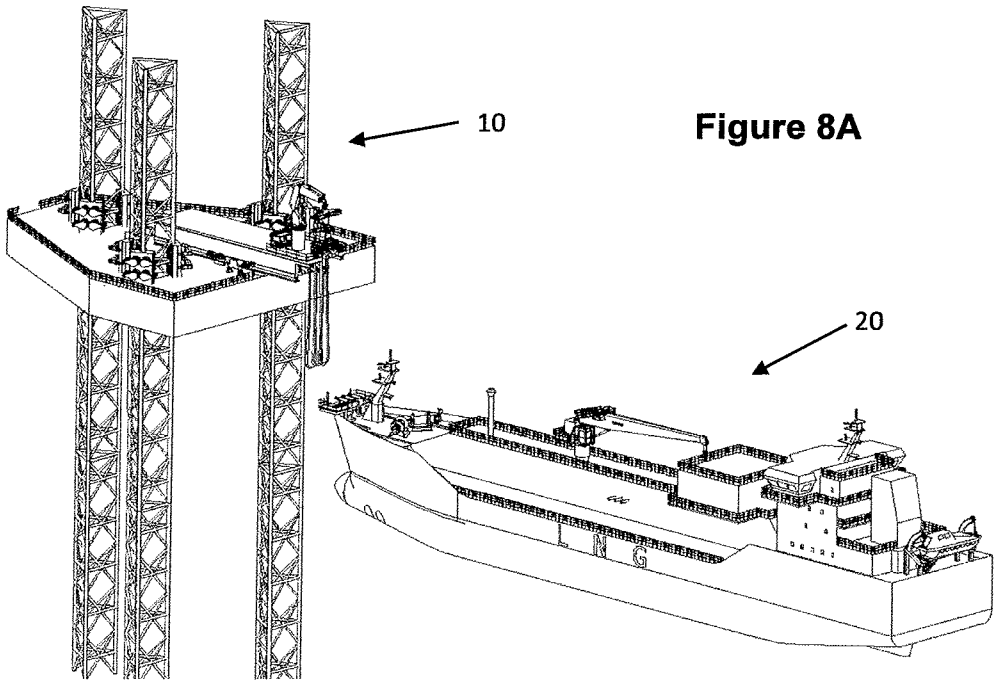

Figure 8A

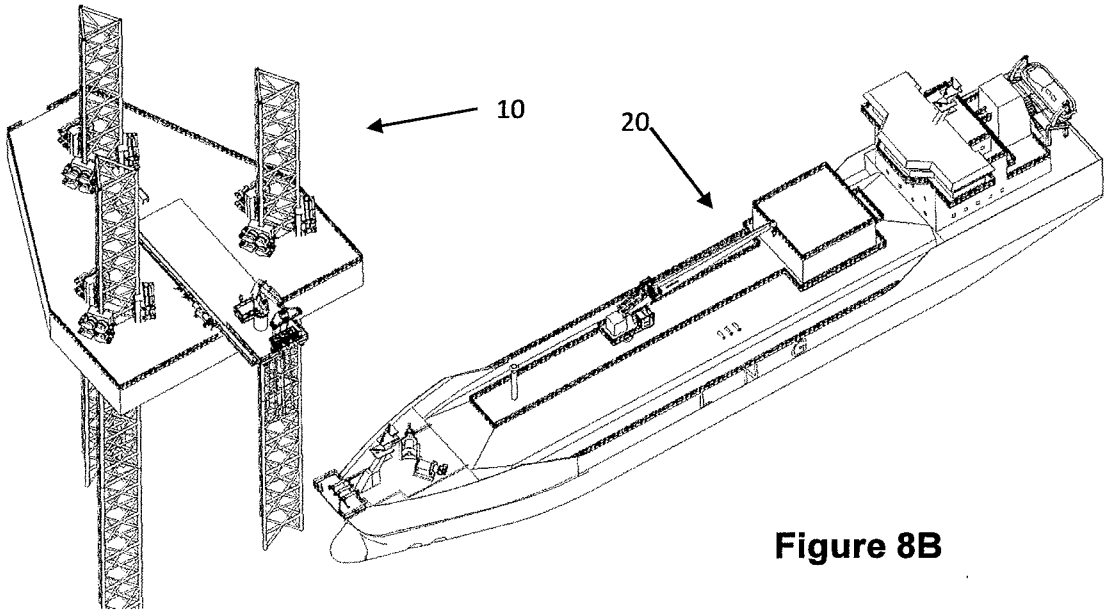

Figure 8B

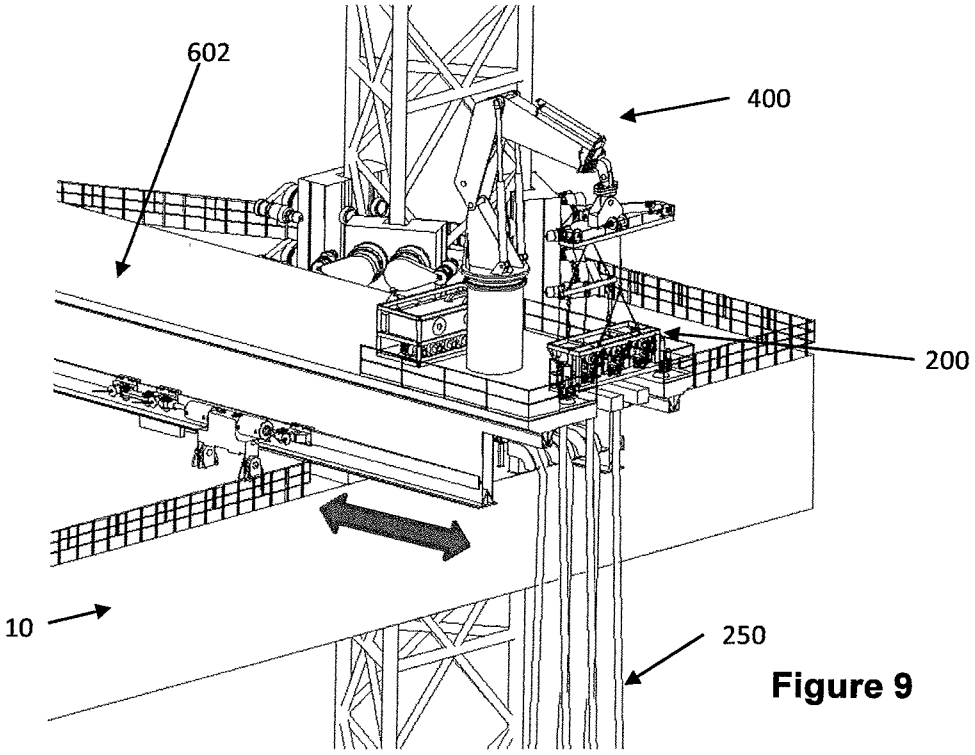

Figure 9

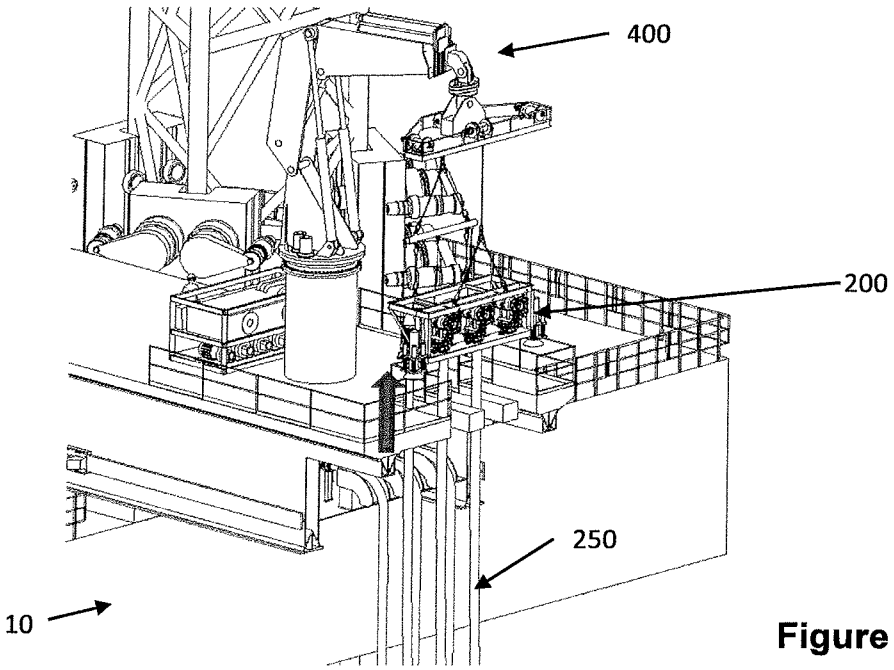

Figure 10

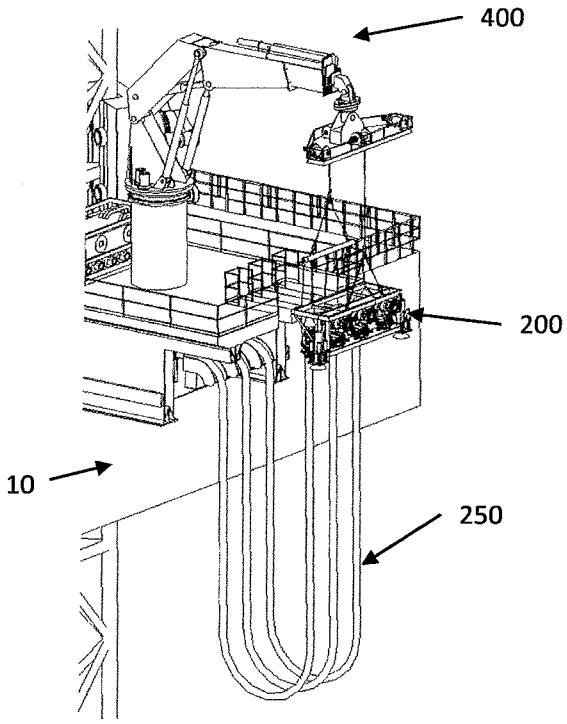

Figure 11

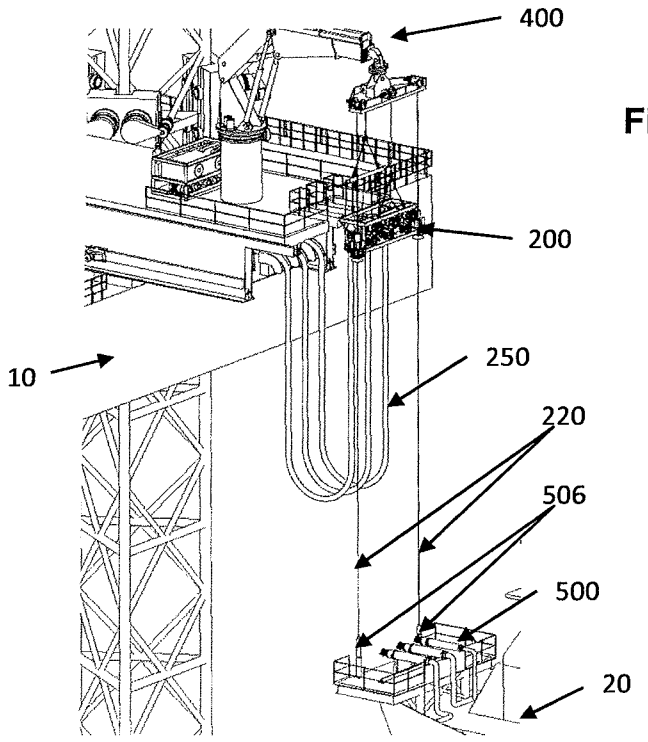

Figure 12

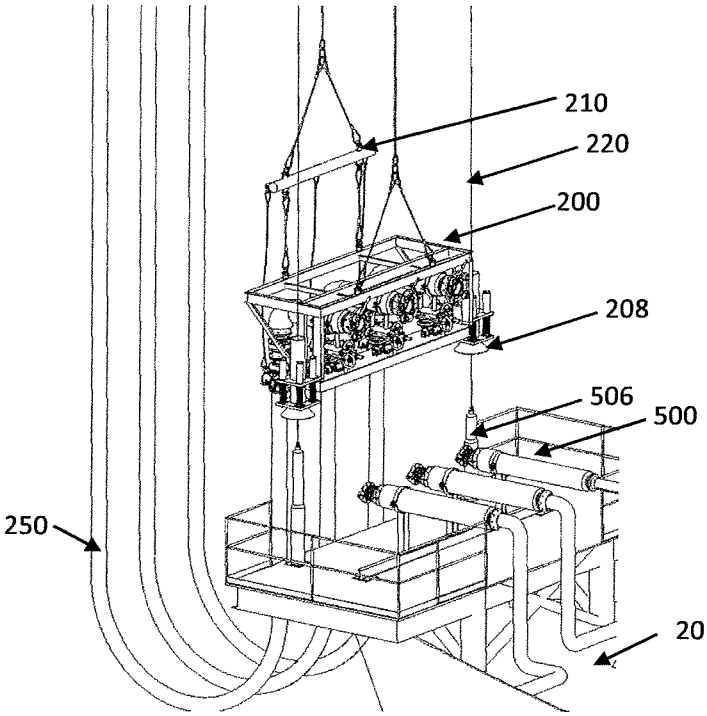

Figure 13

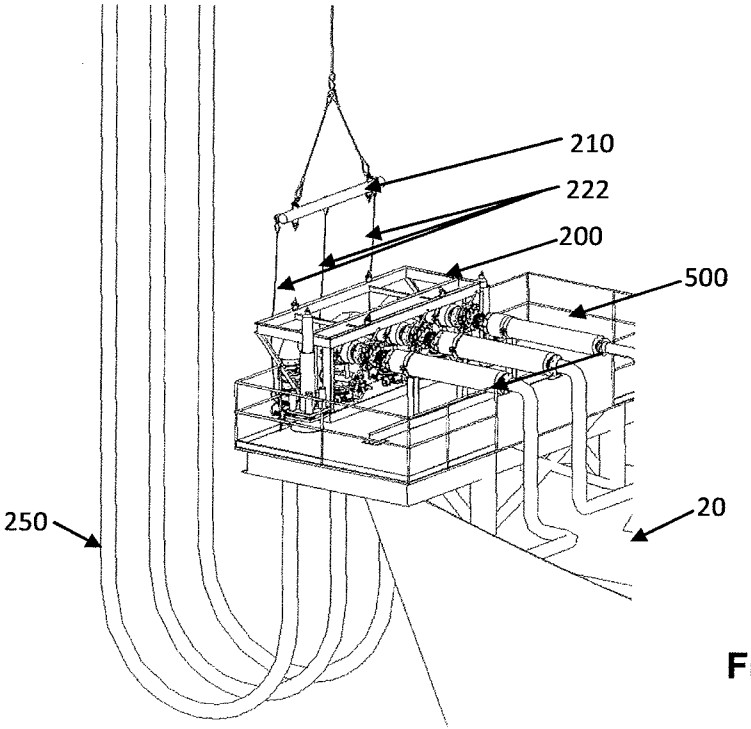

Figure 14

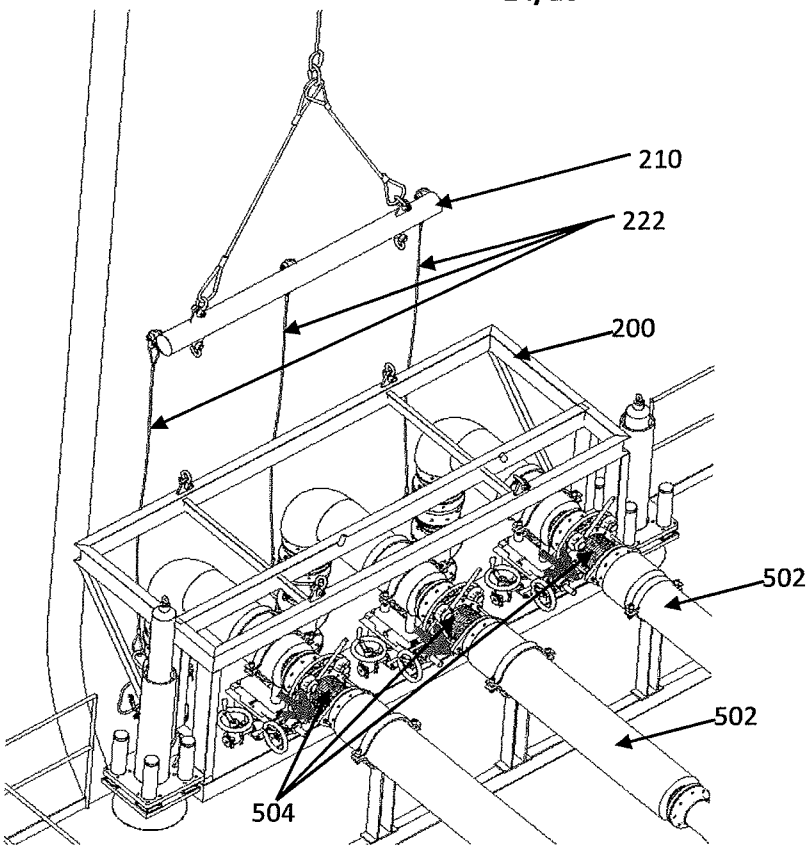

Figure 15

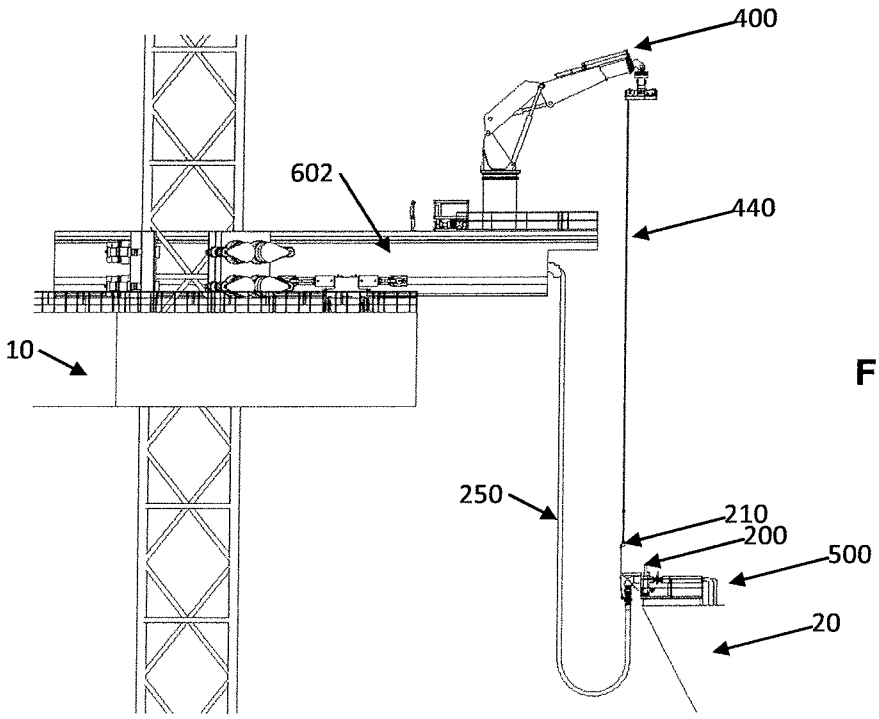

Figure 16

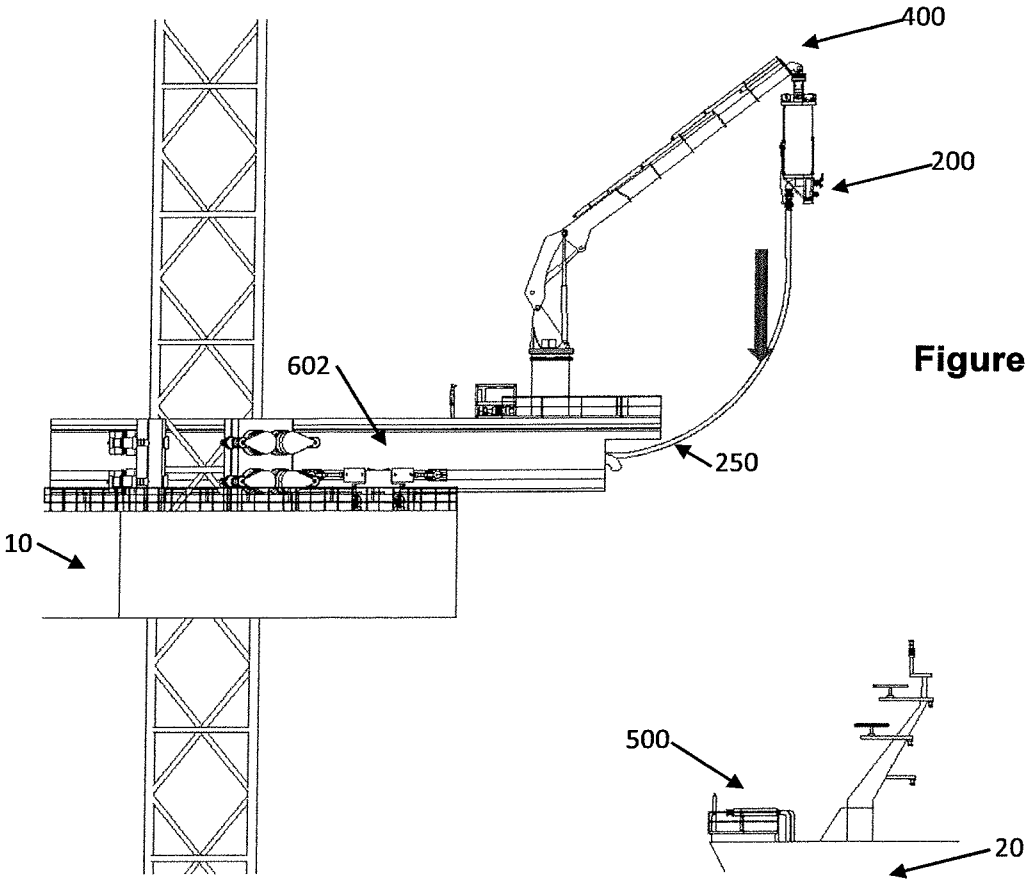

Figure 17

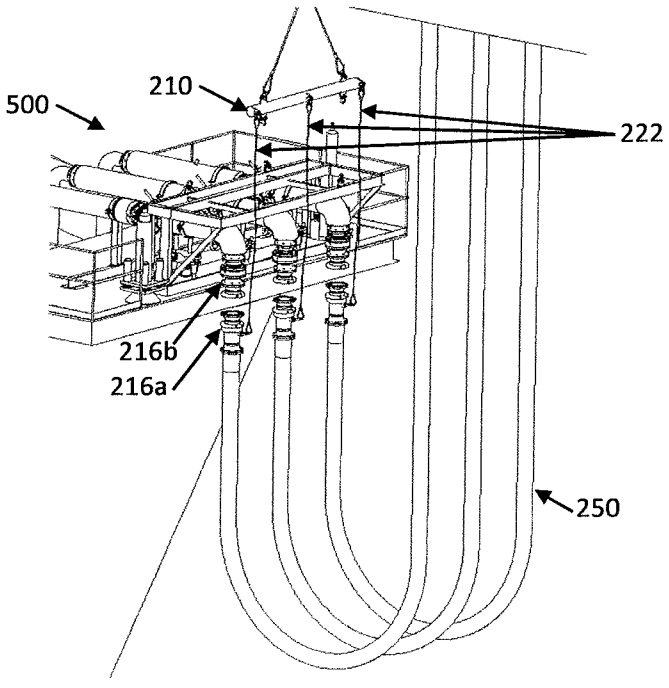

Figure 18

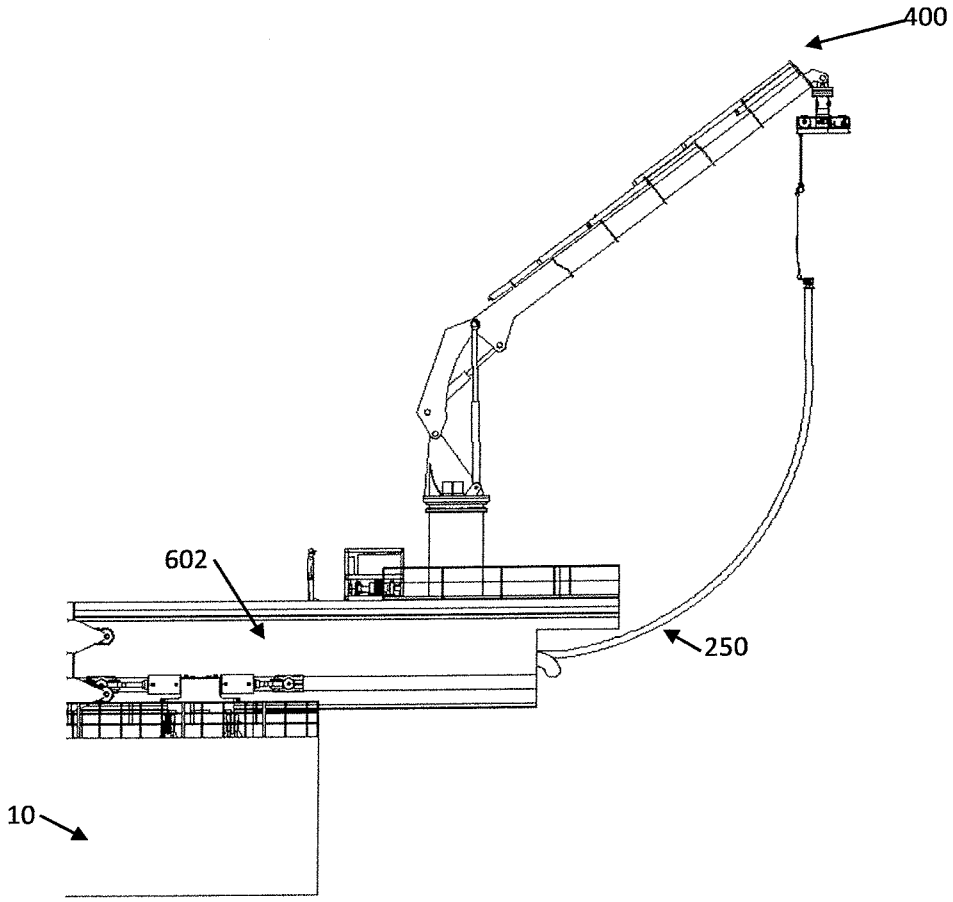

Figure 19