FIG. 1

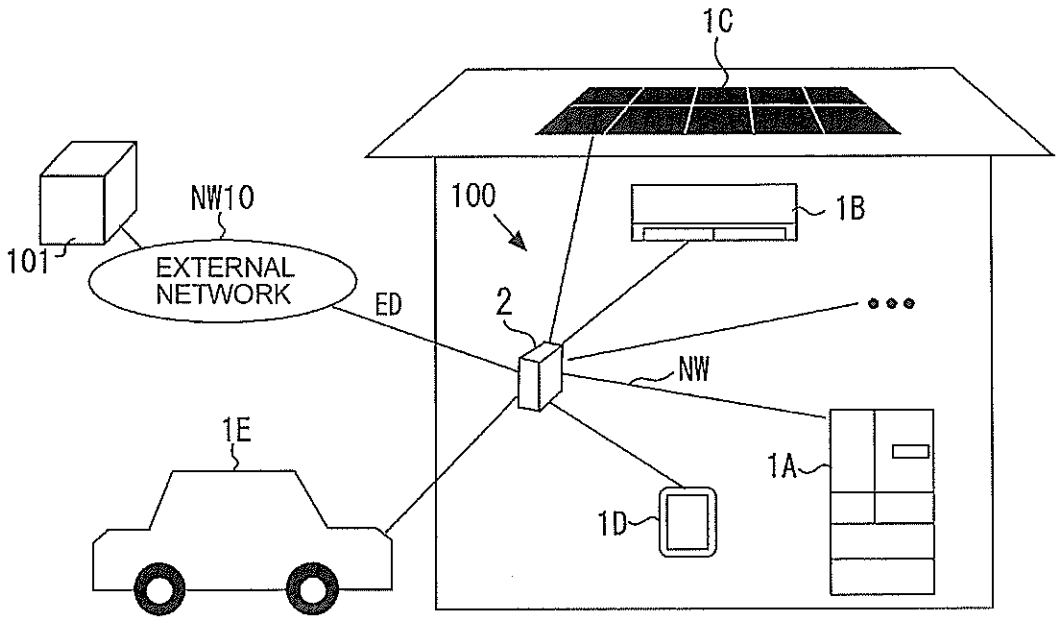
1C
NW10
101
EXTERNAL NETWORK
ED
100
1B
2
NW
1E
1A
1D

FIG. 2

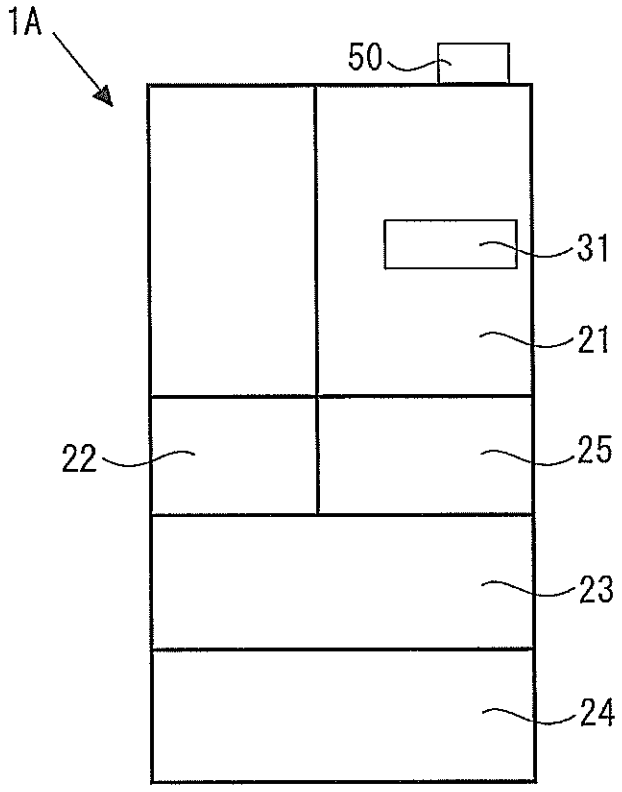
1A
50
31
21
22
25
23
24

FIG. 3

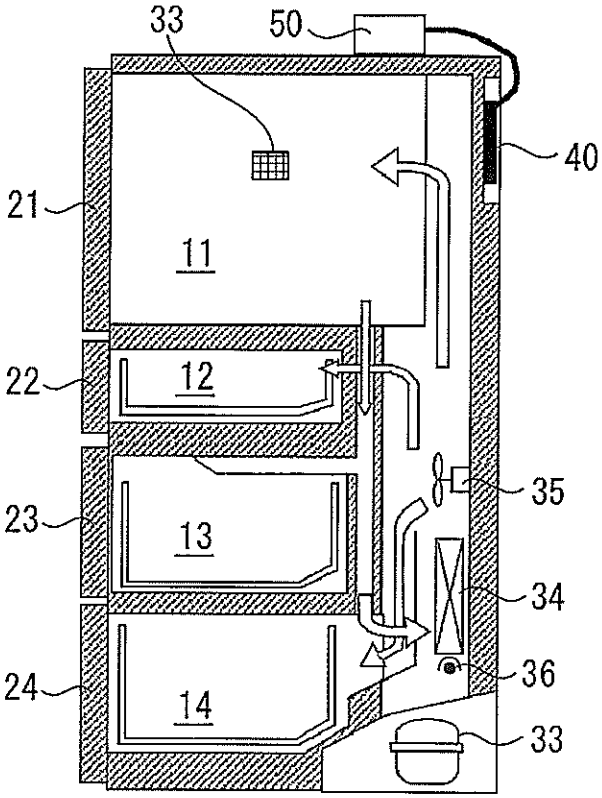
33
50
40
21
11
22
12
35
23
13
34
24
14
36
33

FIG. 4

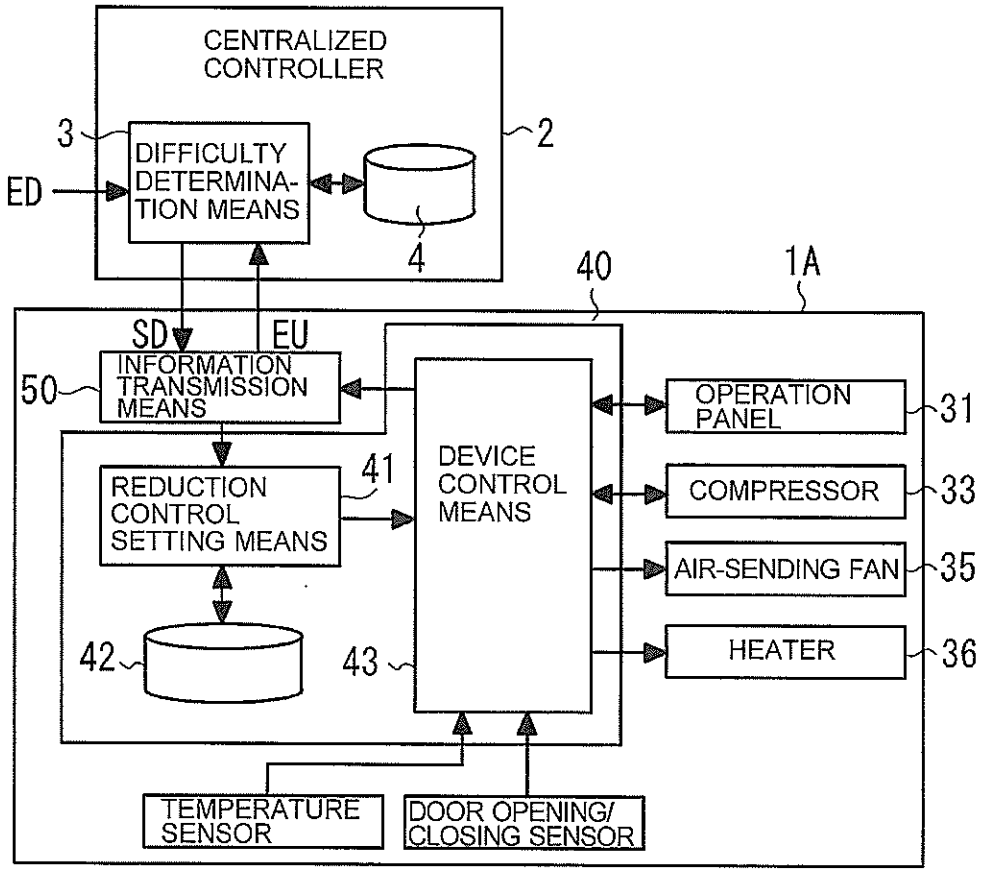
CENTRALIZED CONTROLLER
3
DIFFICULTY DETERMINA-TION MEANS
2
ED
4
40
1A
SD
EU
50
INFORMATION TRANSMISSION MEANS
OPERATION PANEL
31
41
REDUCTION CONTROL SETTING MEANS
DEVICE CONTROL MEANS
COMPRESSOR
33
AIR-SENDING FAN
35
42
43
HEATER
36
TEMPERATURE SENSOR
DOOR OPENING/ CLOSING SENSOR

FIG. 5



POWER SUPPLY INFORMATION ED	POWER GENERATION STATE OF SOLAR POWER GENERATION PANEL PV	POWER USE STATE EU	POWER SUPPLY DIFFICULTY SD
NO PROBLEM	LARGE AMOUNT	SMALL AMOUNT	0
		LARGE AMOUNT	1
	SMALL AMOUNT	SMALL AMOUNT	
		LARGE AMOUNT	2
PEAK CUT	LARGE AMOUNT	SMALL AMOUNT	
		LARGE AMOUNT	3
	SMALL AMOUNT	SMALL AMOUNT	
		LARGE AMOUNT	4
PLANNED BLACKOUT	LARGE AMOUNT	SMALL AMOUNT	
		LARGE AMOUNT	5
	SMALL AMOUNT	SMALL AMOUNT	
		LARGE AMOUNT	6
BLACKOUT	LARGE AMOUNT	SMALL AMOUNT	
		LARGE AMOUNT	7
	SMALL AMOUNT	SMALL AMOUNT	
		LARGE AMOUNT	8

FIG. 6

CONTENTS OF POWER REDUCTION CONTROLS		POWER CONSUMPTION REDUCTION EFFECT	BURDEN ON USER
CONTROL A	ECO MODE	SMALL	SMALL
CONTROL B	ICE-MAKING STOP	SMALL	INTERMEDIATE
CONTROL C	REFRIGERATOR INTERIOR LIGHTING DEVICE EXTINCTION	SMALL	INTERMEDIATE
CONTROL D	RAPID COOLING AVOIDANCE	INTERMEDIATE	INTERMEDIATE
CONTROL E	RAPID ICE-MAKING AVOIDANCE	INTERMEDIATE	INTERMEDIATE
CONTROL F	DEFROST AVOIDANCE	INTERMEDIATE	GREAT
CONTROL G	COMPRESSOR ROTATION SPEED LIMIT	GREAT	GREAT
CONTROL H	STORAGE COMPARTMENT SHIFT-UP	GREAT	GREAT

F I G. 7

42

POWER SUPPLY DIFFICULTY SD	POWER REDUCTION CONTROLS A TO H PRIORITY							
	1	2	3	4	5	6	7	8
0	A	B	C	D	E	F	G	H
1	D	C	B	A	E	F	G	H
2								
3	F	E	D	C	B	A	G	H
4								
5	H	G	F	E	D	C	B	A
6								
7								
8								

F I G. 8

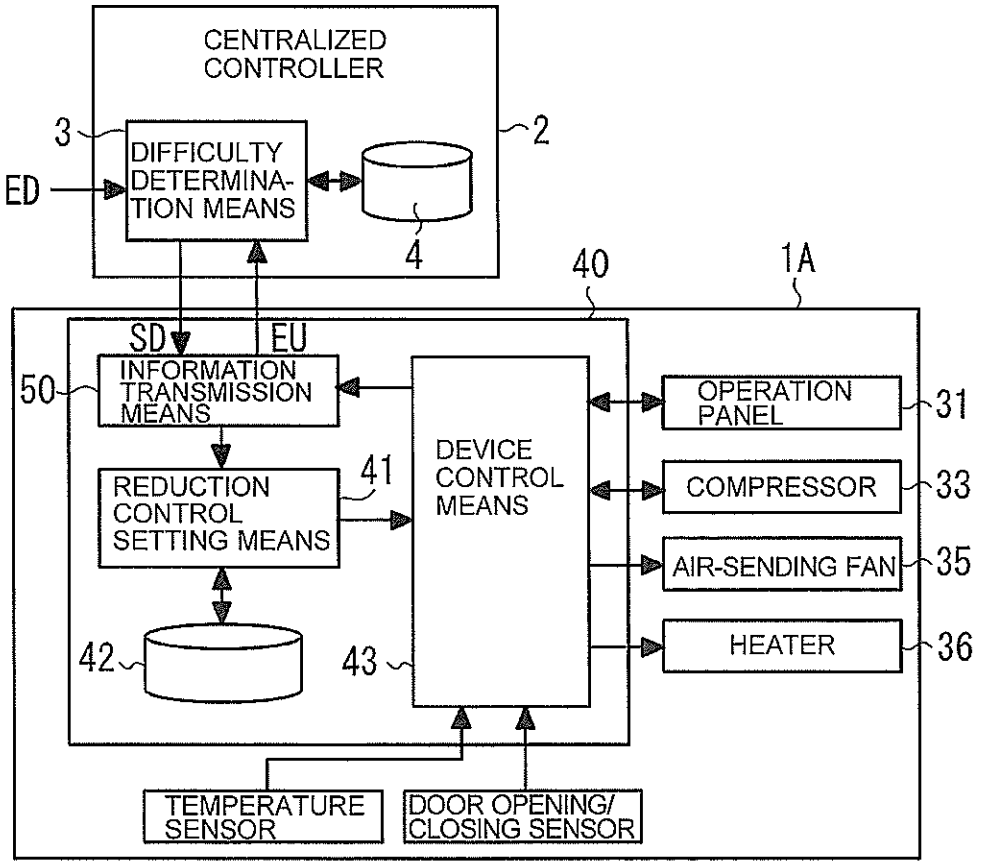

FIG. 9

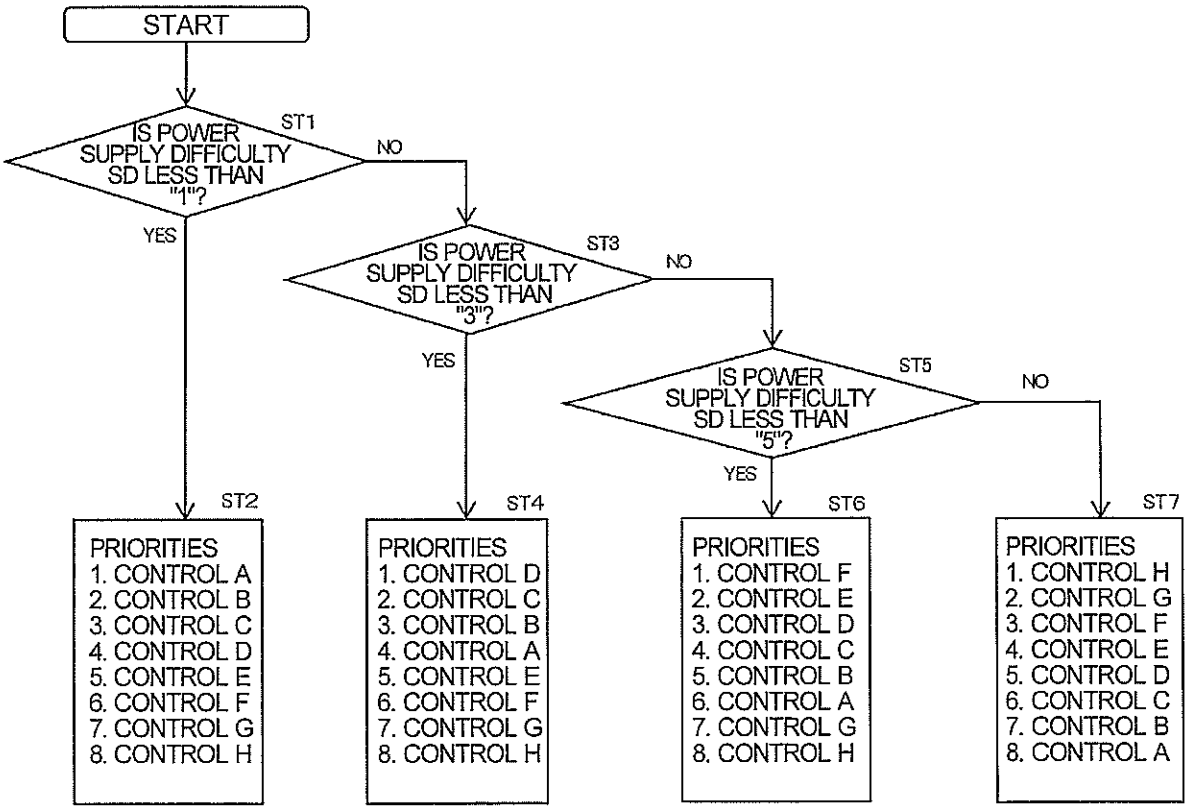
START
IS POWER SUPPLY DIFFICULTY SD LESS THAN "1"?
ST1
NO
YES
IS POWER SUPPLY DIFFICULTY SD LESS THAN "3"?
ST3
NO
YES
IS POWER SUPPLY DIFFICULTY SD LESS THAN "5"?
ST5
NO
YES
ST2
PRIORITIES
1. CONTROL A
2. CONTROL B
3. CONTROL C
4. CONTROL D
5. CONTROL E
6. CONTROL F
7. CONTROL G
8. CONTROL H
ST4
PRIORITIES
1. CONTROL D
2. CONTROL C
3. CONTROL B
4. CONTROL A
5. CONTROL E
6. CONTROL F
7. CONTROL G
8. CONTROL H
ST6
PRIORITIES
1. CONTROL F
2. CONTROL E
3. CONTROL D
4. CONTROL C
5. CONTROL B
6. CONTROL A
7. CONTROL G
8. CONTROL H
ST7
PRIORITIES
1. CONTROL H
2. CONTROL G
3. CONTROL F
4. CONTROL E
5. CONTROL D
6. CONTROL C
7. CONTROL B
8. CONTROL A

FIG. 10

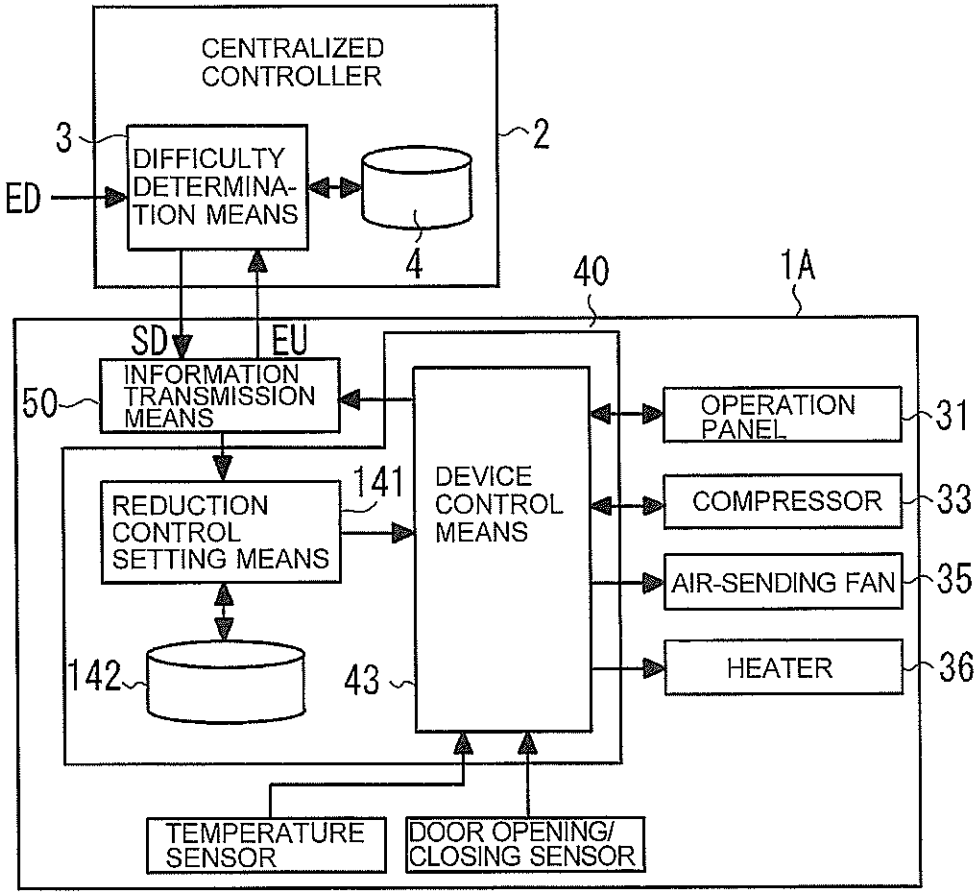
CENTRALIZED CONTROLLER
3
DIFFICULTY DETERMINATION MEANS
2
ED
4
40
1A
SD
EU
50
INFORMATION TRANSMISSION MEANS
OPERATION PANEL
31
141
REDUCTION CONTROL SETTING MEANS
DEVICE CONTROL MEANS
COMPRESSOR
33
AIR-SENDING FAN
35
142
43
HEATER
36
TEMPERATURE SENSOR
DOOR OPENING/ CLOSING SENSOR

FIG. 11

142

POWER SUPPLY DIFFICULTY SD	EXECUTABLE POWER REDUCTION CONTROLS
0	A B
1	A B C D
2	
3	A B C D E F
4	
5	A B C D E F G H
6	
7	
8	

FIG. 12

