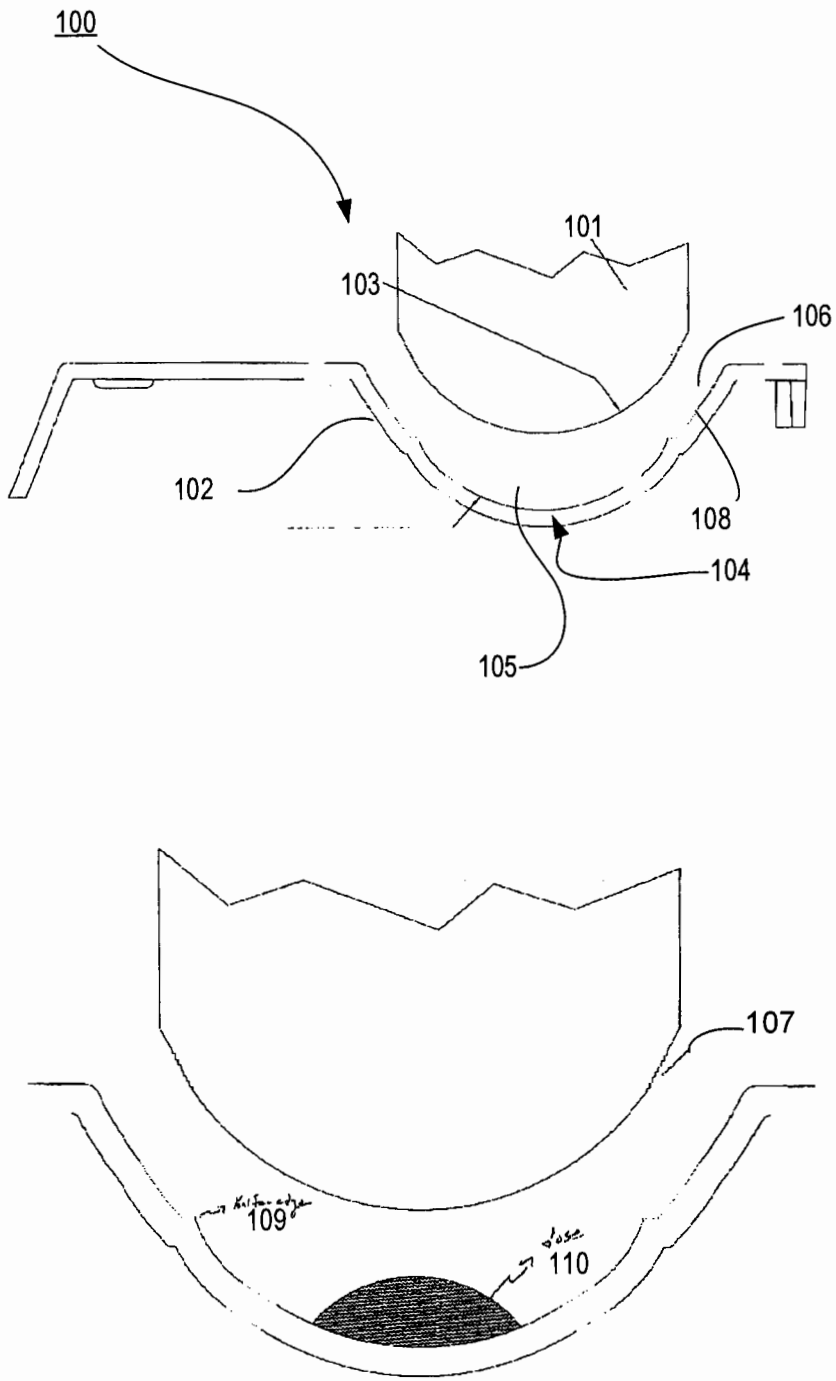

FIG. 1 of 5

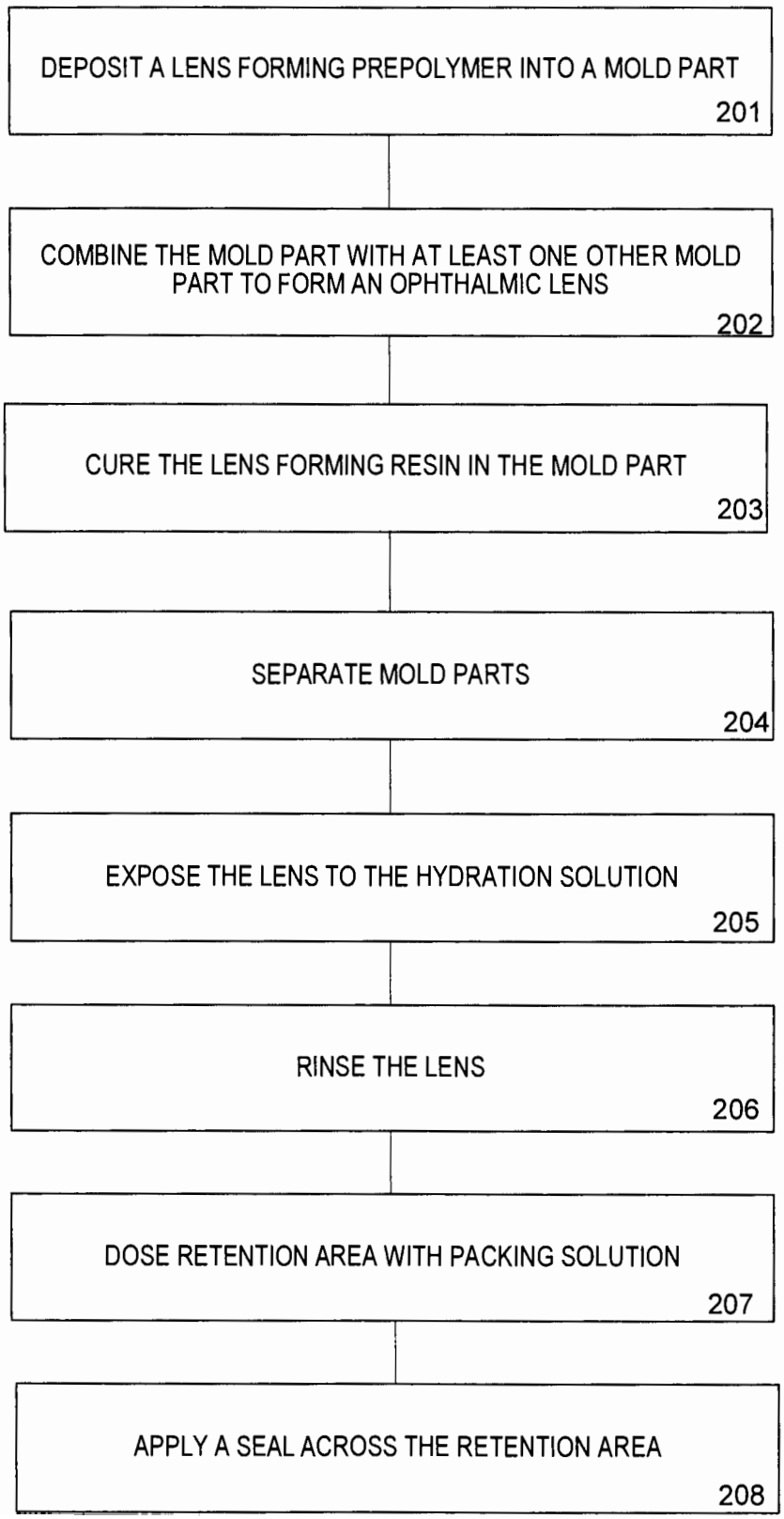
DEPOSIT A LENS FORMING PREPOLYMER INTO A MOLD PART
201
COMBINE THE MOLD PART WITH AT LEAST ONE OTHER MOLD PART TO FORM AN OPHTHALMIC LENS
202
CURE THE LENS FORMING RESIN IN THE MOLD PART
203
SEPARATE MOLD PARTS
204
EXPOSE THE LENS TO THE HYDRATION SOLUTION
205
RINSE THE LENS
206
DOSE RETENTION AREA WITH PACKING SOLUTION
207
APPLY A SEAL ACROSS THE RETENTION AREA
208

FIG. 2 of 5

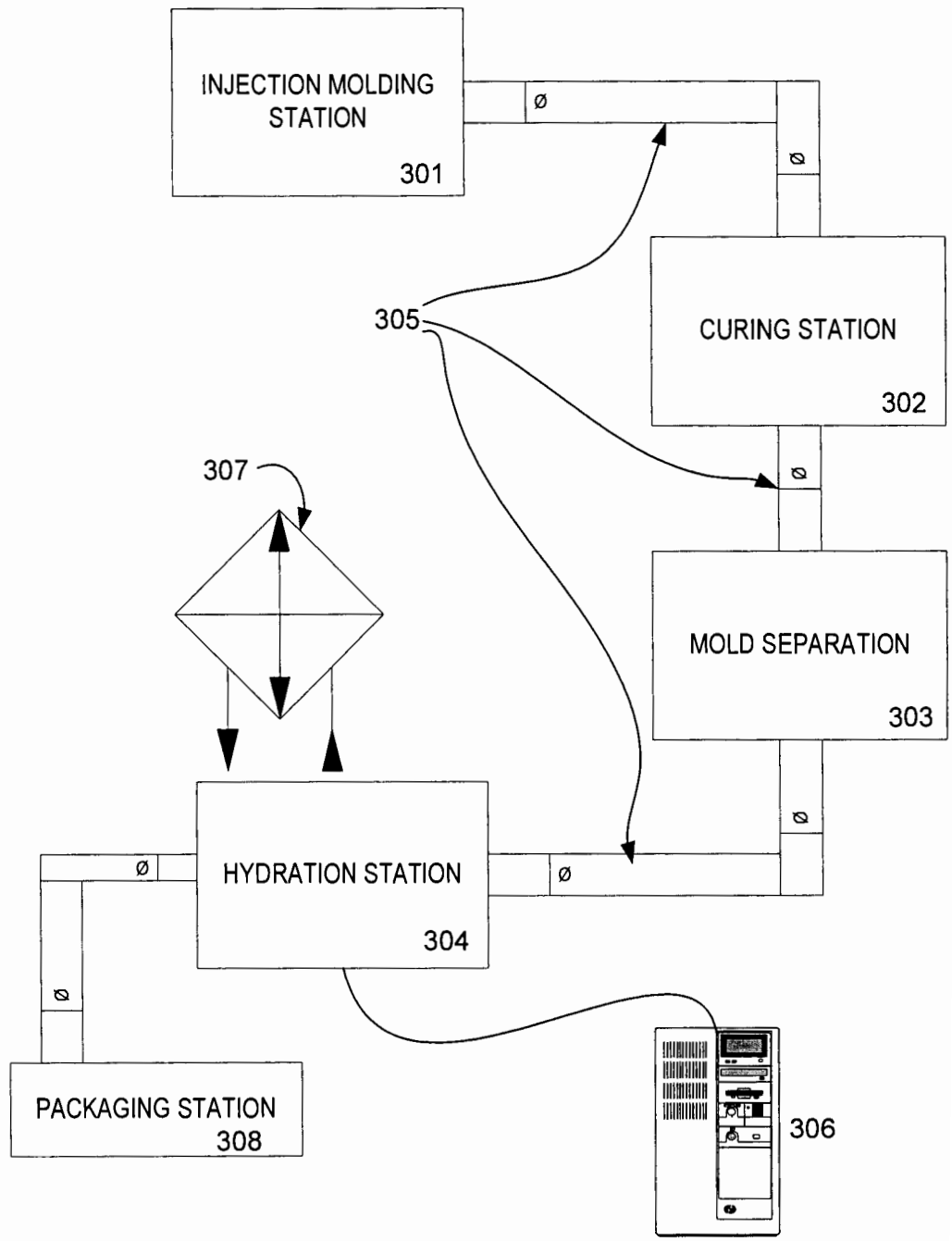
INJECTION MOLDING STATION
301
CURING STATION
302
MOLD SEPARATION
303
HYDRATION STATION
304
PACKAGING STATION
308
305
307
306

FIG. 3 of 5

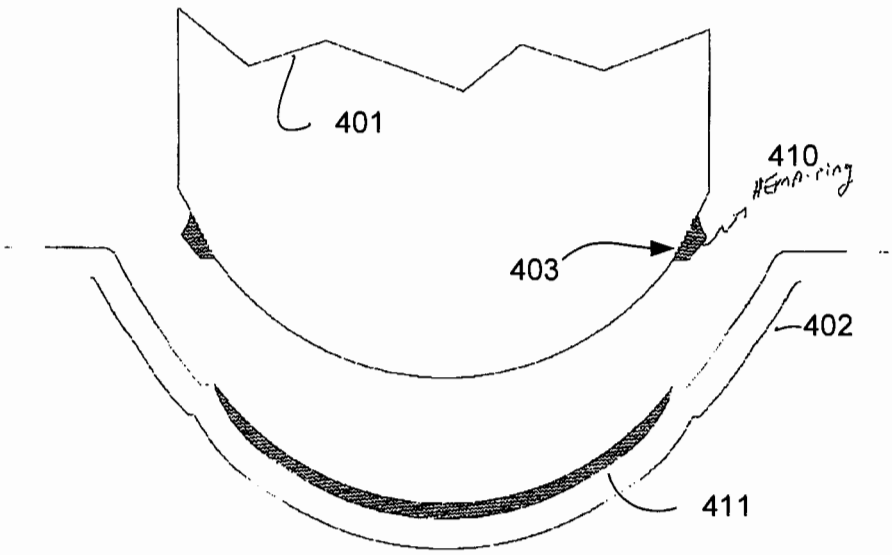

FIG. 4 of 5

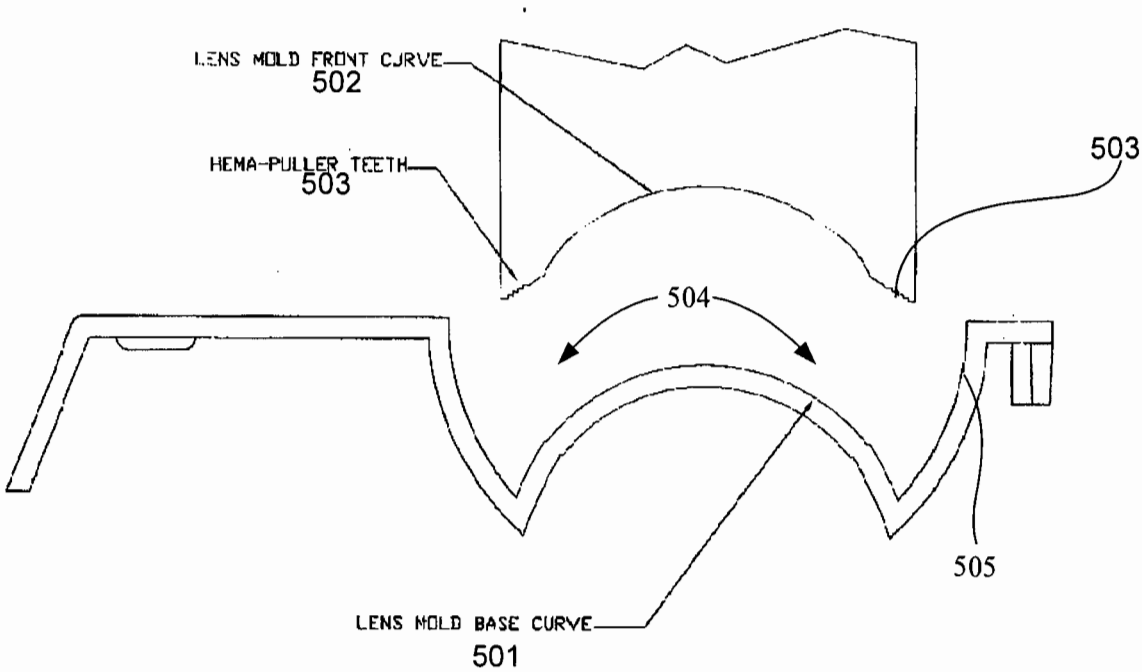

FIG. 5 of 5