FIG. 1

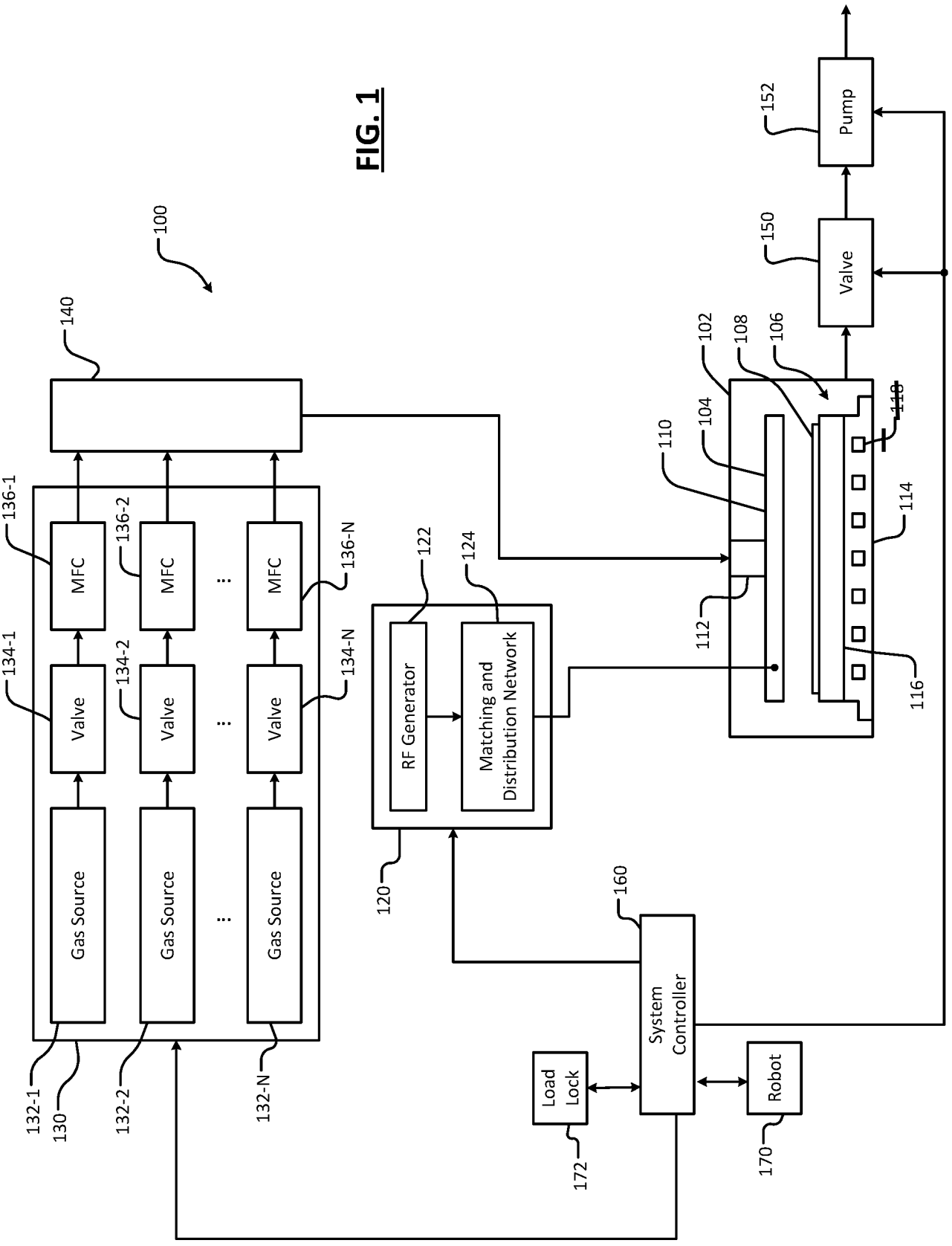
100
140
136-1
136-2
136-N
MFC
MFC
MFC
134-1
134-2
134-N
Valve
Valve
Valve
Gas Source
Gas Source
Gas Source
132-1
130
132-2
132-N
122
124
RF Generator
Matching and Distribution Network
120
102
108
106
104
110
112
114
116
118
150
Valve
152
Pump
160
System Controller
Load Lock
172
Robot
170

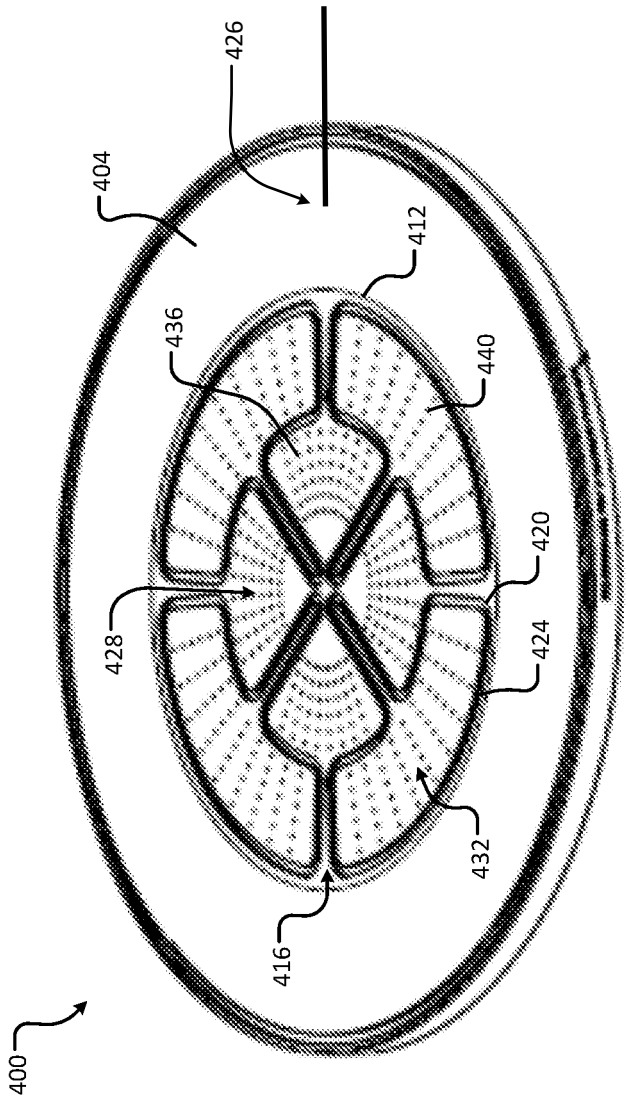

FIG. 4A

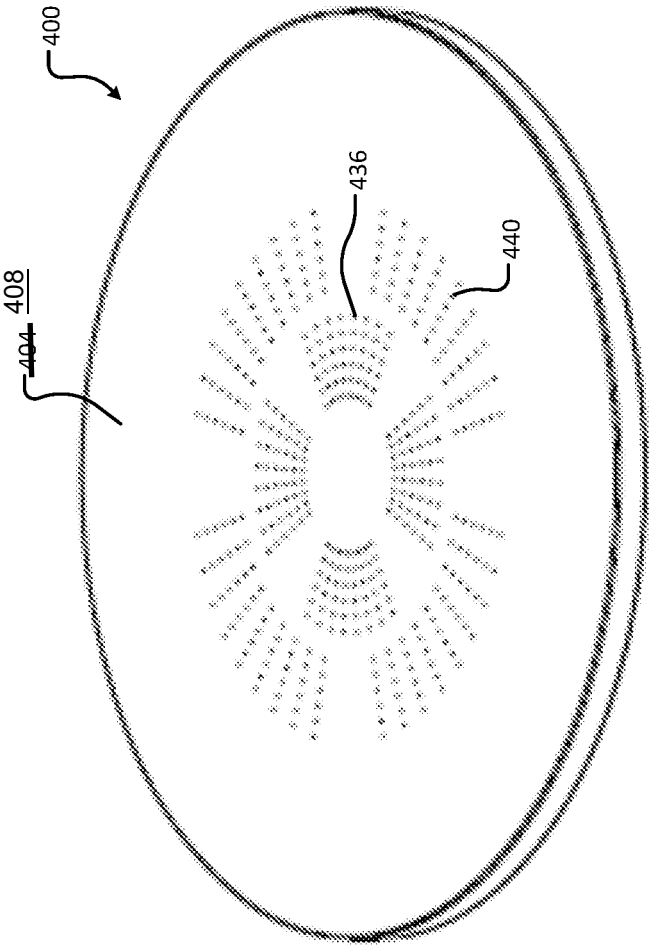

FIG. 4B