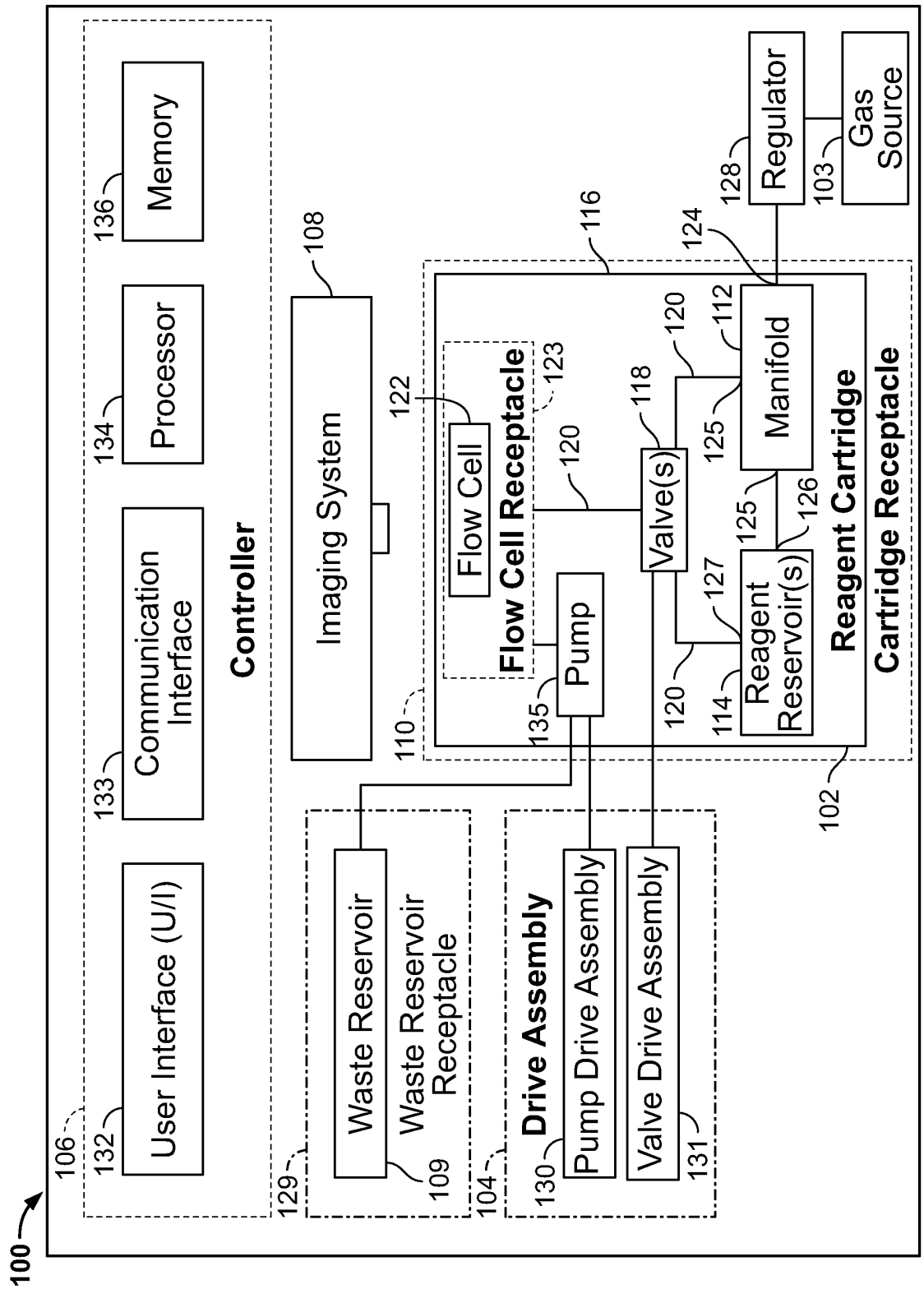
100
106
132
User Interface (U/I)
133
Communication Interface
134
Processor
136
Memory
Controller
108
Imaging System
129
Waste Reservoir
109
Waste Reservoir Receptacle
104
Drive Assembly
130
Pump Drive Assembly
131
Valve Drive Assembly
110
116
122
Flow Cell
123
Flow Cell Receptacle
120
118
Valve(s)
120
112
Manifold
124
125
125
126
127
Reagent Reservoir(s)
114
120
135
Pump
Reagent Cartridge
Cartridge Receptacle
102
128
Regulator
103
Gas Source

FIG. 1

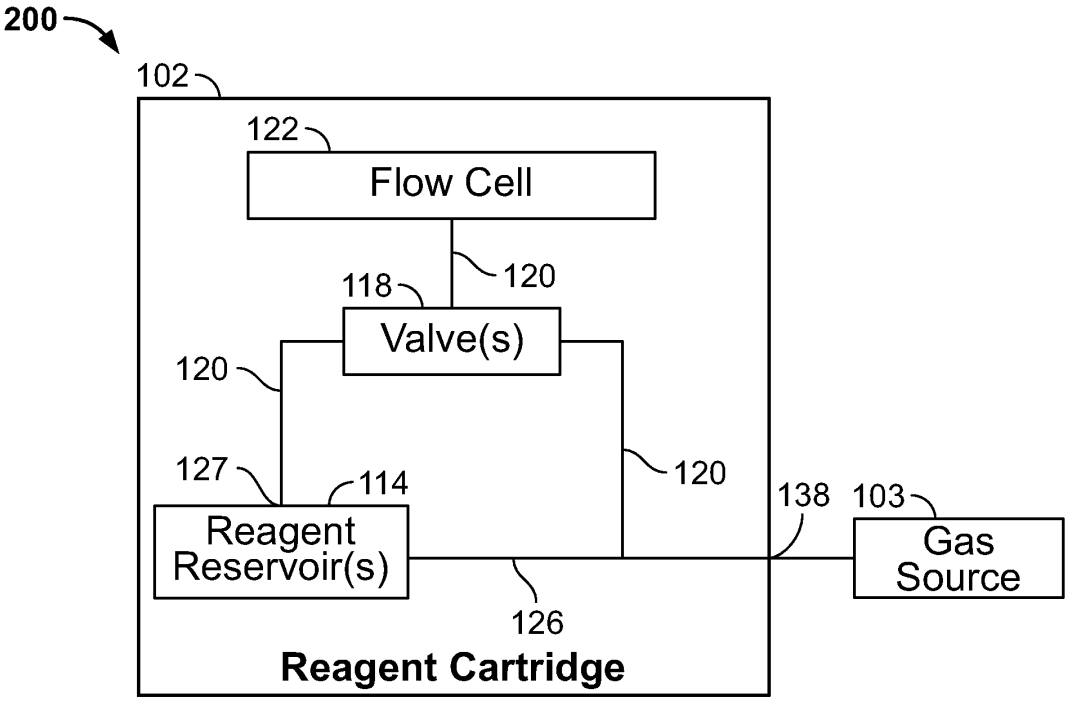
200
102
122
Flow Cell
120
118
Valve(s)
120
120
127
114
138
103
Reagent Reservoir(s)
Gas Source
126
Reagent Cartridge

FIG. 2

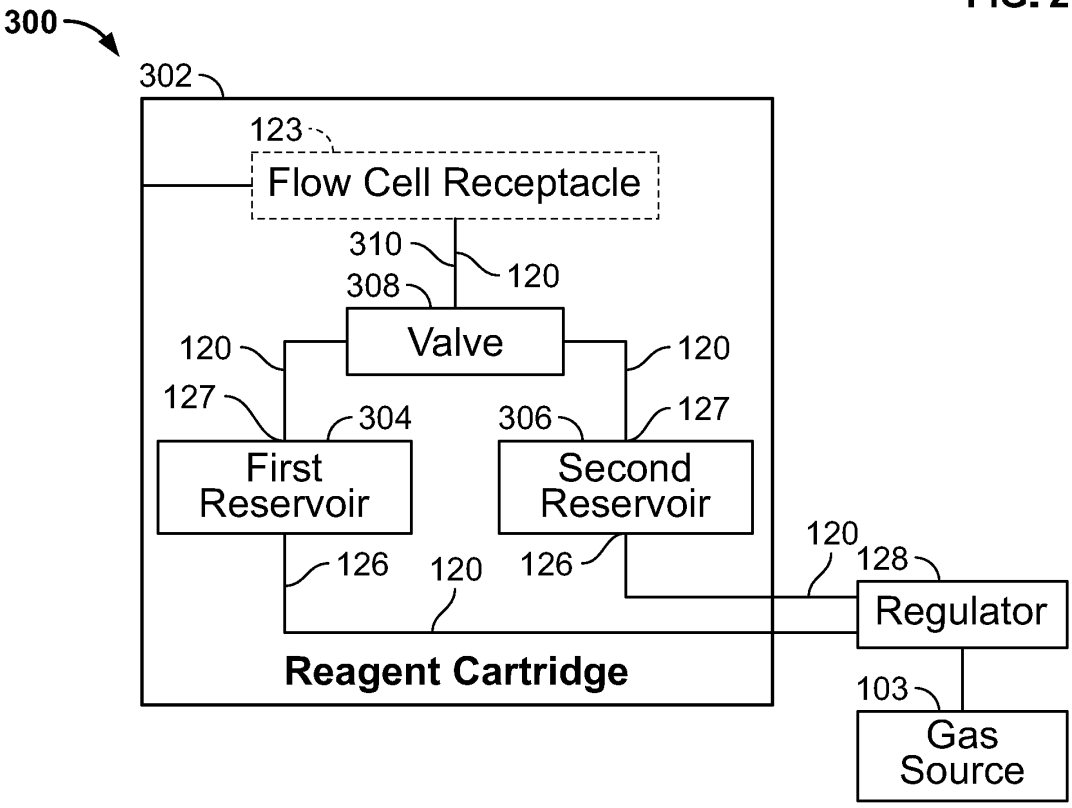
300
302
123
Flow Cell Receptacle
310
120
308
Valve
120
120
127
304
306
127
First Reservoir
Second Reservoir
126
120
126
120
128
Regulator
Reagent Cartridge
103
Gas Source

FIG. 3

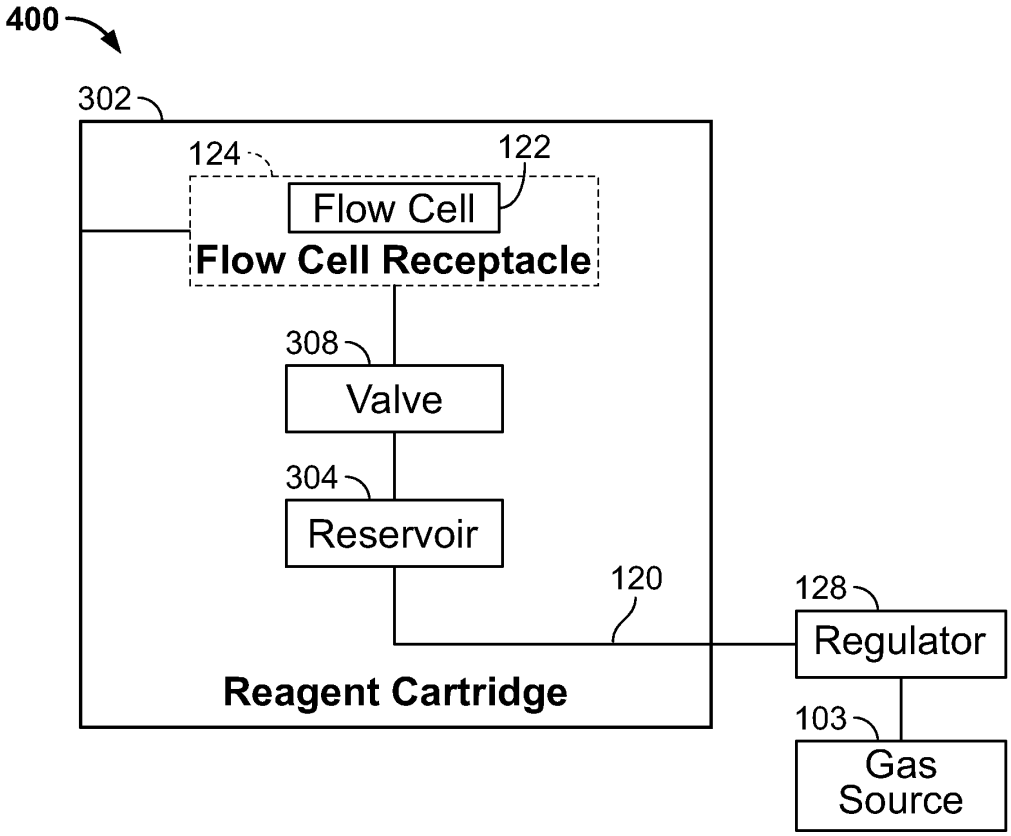
400
302
124
122
Flow Cell
Flow Cell Receptacle
308
Valve
304
Reservoir
120
128
Regulator
Reagent Cartridge
103
Gas Source

FIG. 4

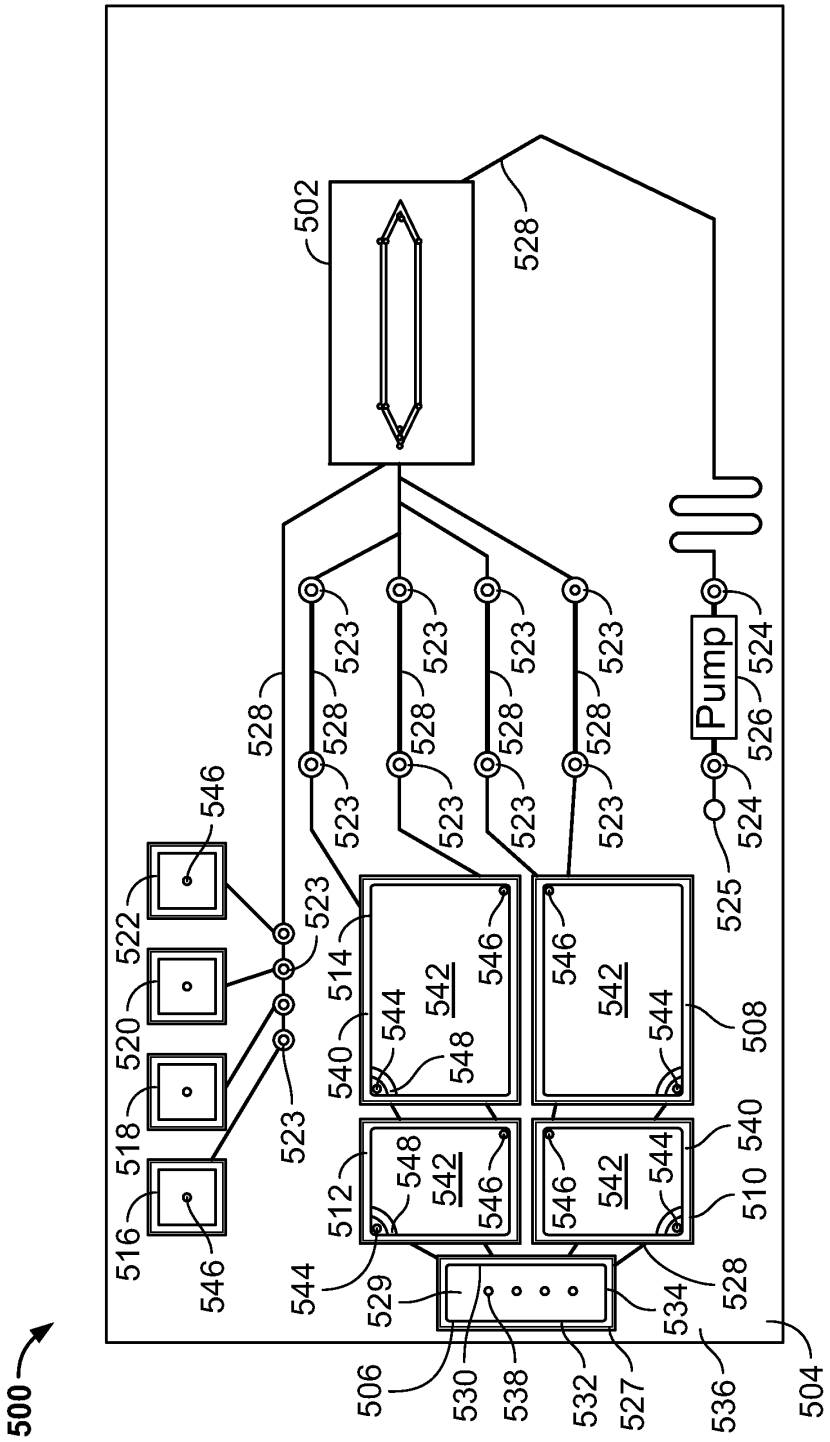
500
502
504
506
508
510
512
514
516
518
520
522
523
524
525
526
527
528
529
530
532
534
536
538
540
542
544
546
548
Pump

FIG. 5

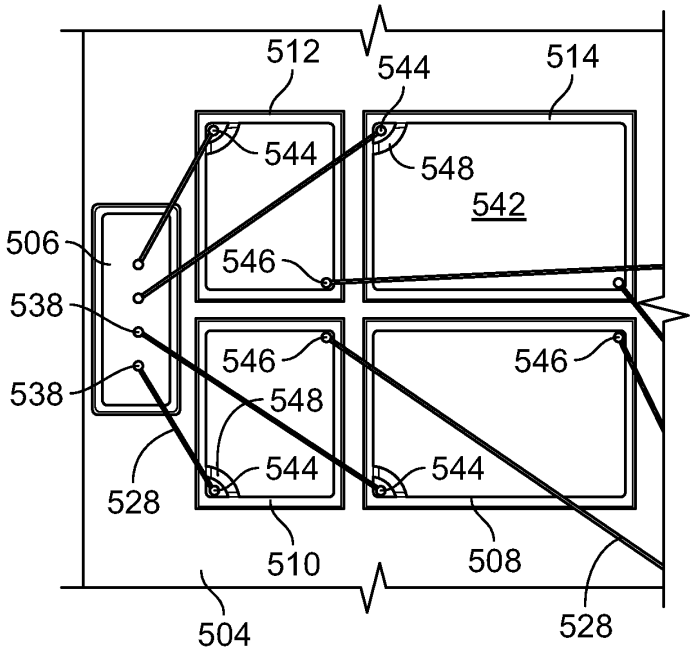
512
544
514
544
548
542
506
546
538
546
546
538
548
544
544
528
510
508
504
528

FIG. 6

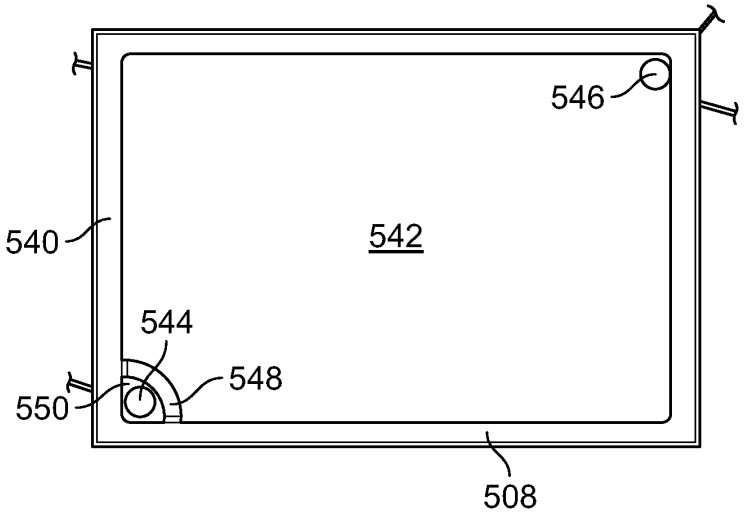
546
542
540
544
548
550
508

FIG. 7

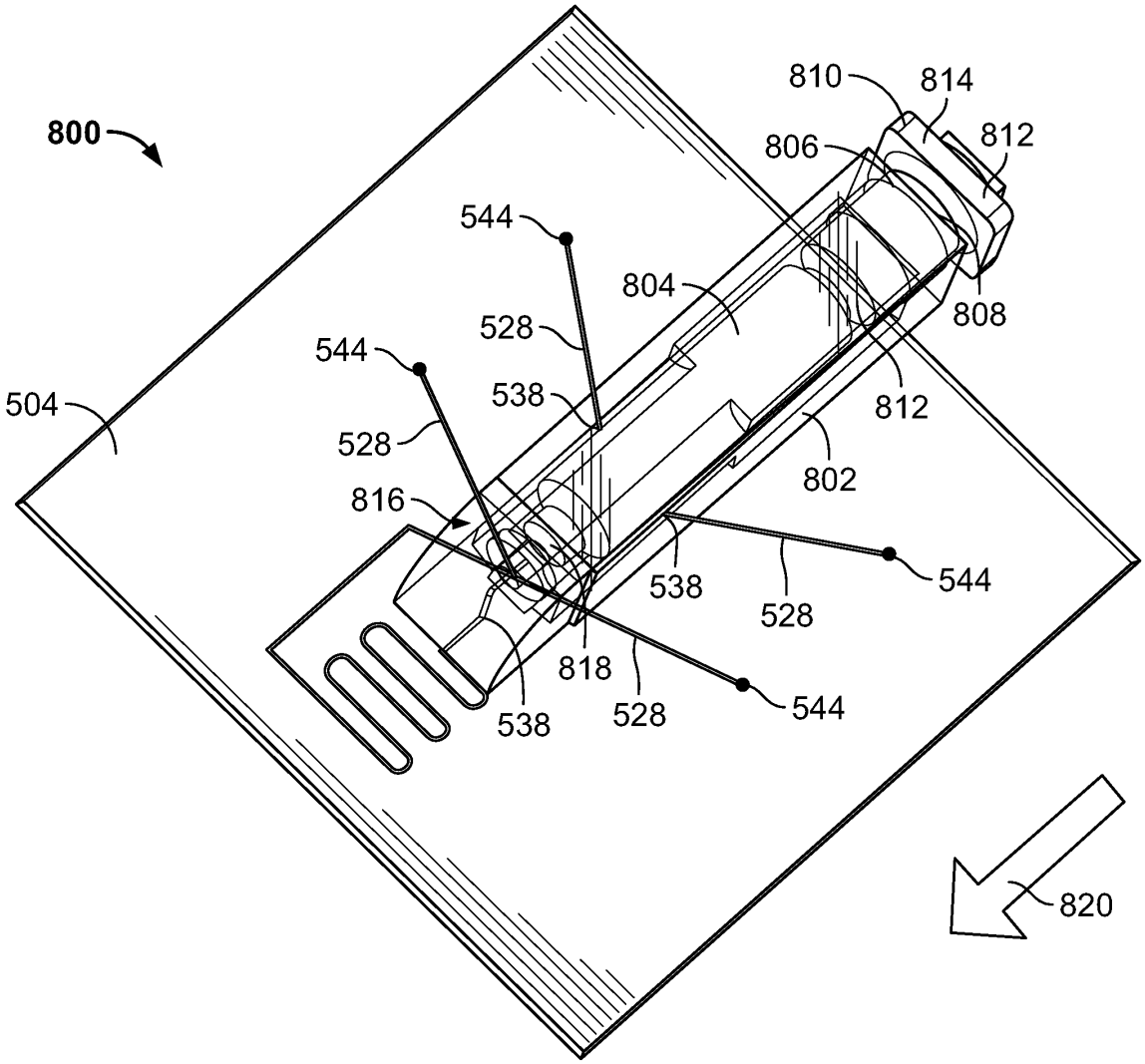
800
810
814
812
806
544
804
808
528
544
538
812
504
528
802
816
544
538
528
818
544
538
528
820

FIG. 8

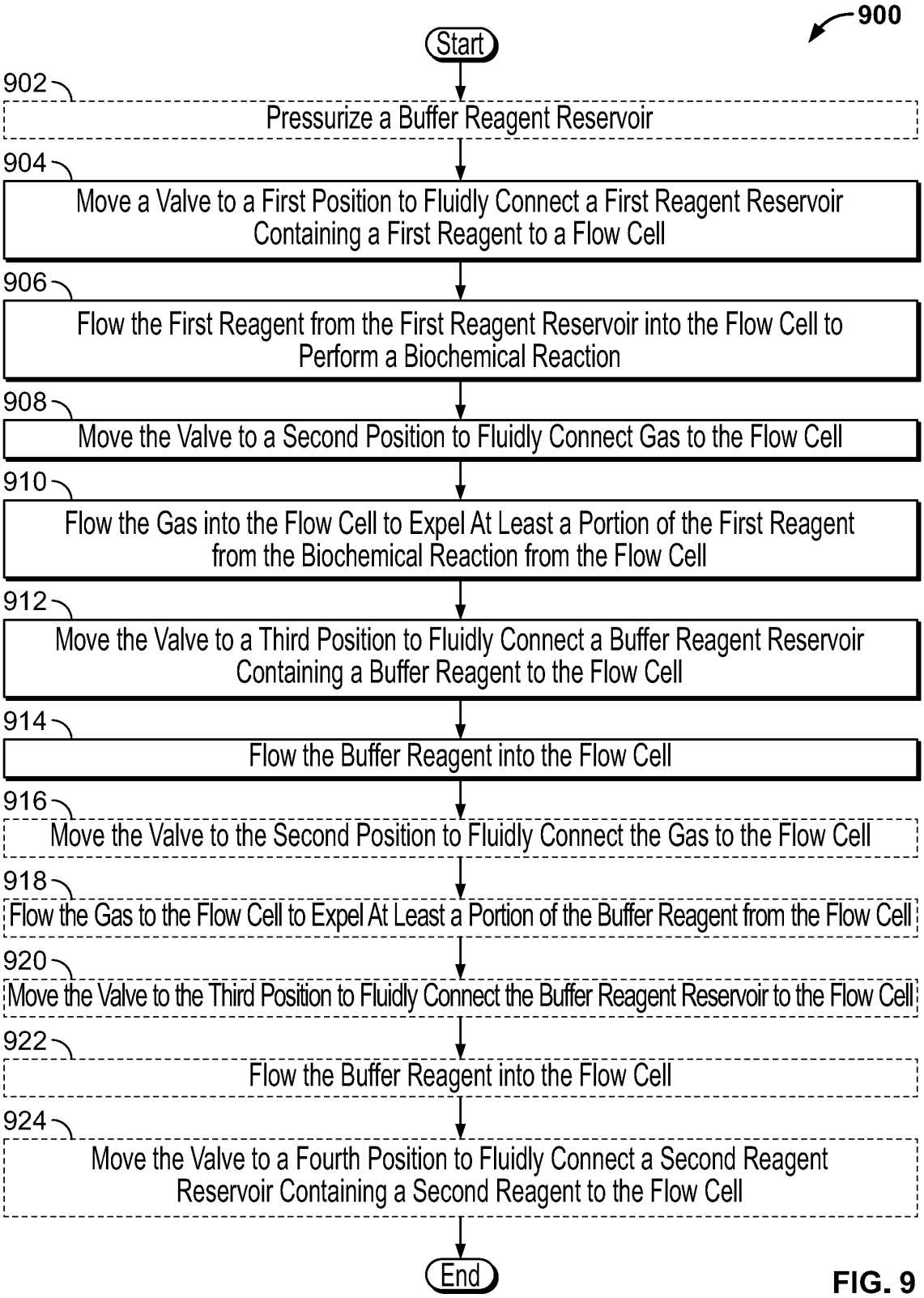
900
Start
902
Pressurize a Buffer Reagent Reservoir
904
Move a Valve to a First Position to Fluidly Connect a First Reagent Reservoir Containing a First Reagent to a Flow Cell
906
Flow the First Reagent from the First Reagent Reservoir into the Flow Cell to Perform a Biochemical Reaction
908
Move the Valve to a Second Position to Fluidly Connect Gas to the Flow Cell
910
Flow the Gas into the Flow Cell to Expel At Least a Portion of the First Reagent from the Biochemical Reaction from the Flow Cell
912
Move the Valve to a Third Position to Fluidly Connect a Buffer Reagent Reservoir Containing a Buffer Reagent to the Flow Cell
914
Flow the Buffer Reagent into the Flow Cell
916
Move the Valve to the Second Position to Fluidly Connect the Gas to the Flow Cell
918
Flow the Gas to the Flow Cell to Expel At Least a Portion of the Buffer Reagent from the Flow Cell
920
Move the Valve to the Third Position to Fluidly Connect the Buffer Reagent Reservoir to the Flow Cell
922
Flow the Buffer Reagent into the Flow Cell
924
Move the Valve to a Fourth Position to Fluidly Connect a Second Reagent Reservoir Containing a Second Reagent to the Flow Cell
End

FIG. 9

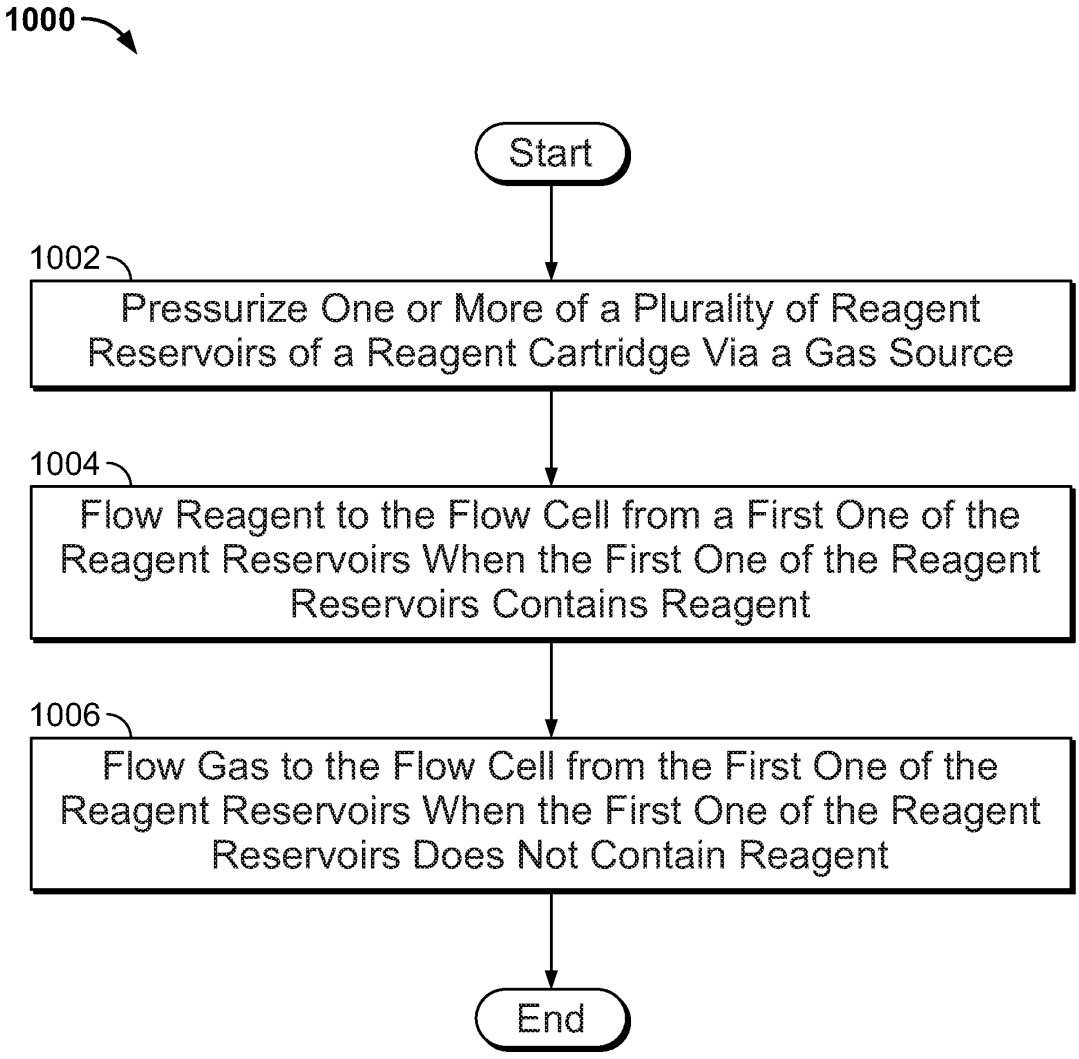
1000
Start
1002
Pressurize One or More of a Plurality of Reagent Reservoirs of a Reagent Cartridge Via a Gas Source
1004
Flow Reagent to the Flow Cell from a First One of the Reagent Reservoirs When the First One of the Reagent Reservoirs Contains Reagent
1006
Flow Gas to the Flow Cell from the First One of the Reagent Reservoirs When the First One of the Reagent Reservoirs Does Not Contain Reagent
End

FIG. 10

PCT/US2020/034666

Box No. II Observations where certain claims were found unsearchable (Continuation of item 2 of first sheet)

This international search report has not been established in respect of certain claims under Article 17(2)(a) for the following reasons:

1. ☐ Claims Nos.:
because they relate to subject matter not required to be searched by this Authority, namely:

2. ☒ Claims Nos.: 14,23-24,31
because they relate to parts of the international application that do not comply with the prescribed requirements to such an extent that no meaningful international search can be carried out, specifically:
Claims 14,23,24,31 are regarded to be unclear because they refer to claims which do comply with PCT Rule 6.4(a)

3. ☒ Claims Nos.: 4-6,10-13,15-17,21-22,25,29-30,32
because they are dependent claims and are not drafted in accordance with the second and third sentences of Rule 6.4(a).

Box No. III Observations where unity of invention is lacking (Continuation of item 3 of first sheet)

This International Searching Authority found multiple inventions in this international application, as follows:

1. ☐ As all required addtional search fees were timely paid by the applicant, this international search report covers all searchable claims.

2. ☐ As all searchable claims could be searched without effort justifying an additional fees, this Authority did not invite payment of any additional fees.

3. ☐ As only some of the required additional search fees were timely paid by the applicant, this international search report covers only those claims for which fees were paid, specifically claims Nos.:

4. ☐ No required additional search fees were timely paid by the applicant. Consequently, this international search report is restricted to the invention first mentioned in the claims; it is covered by claims Nos.:

Remark on Protest

☐ The additional search fees were accompanied by the applicant's protest and, where applicable, the payment of a protest fee.
☐ The additional search fees were accompanied by the applicant's protest but the applicable protest fee was not paid within the time limit specified in the invitation.
☐ No protest accompanied the payment of additional search fees.