FIG. 1

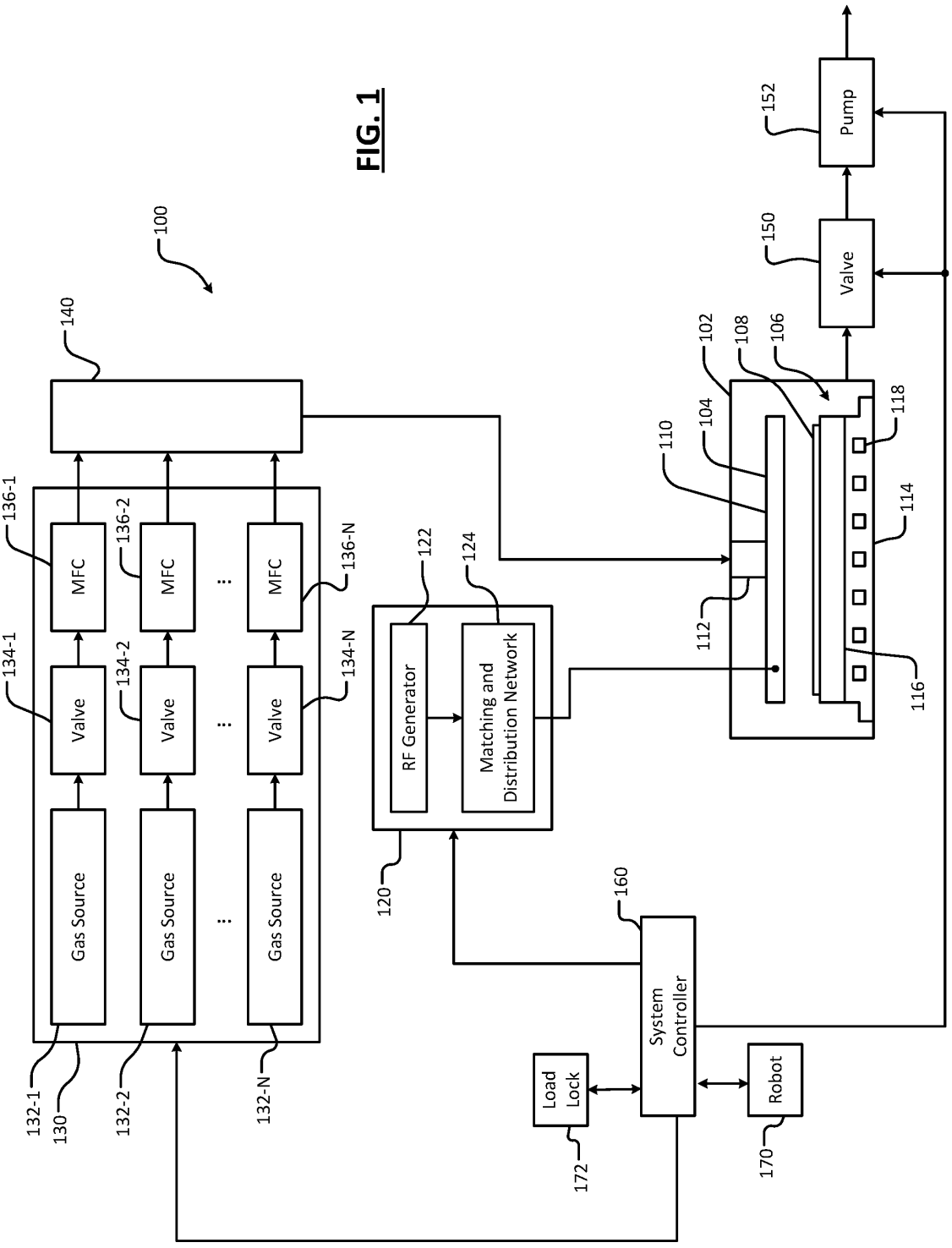
100
140
136-1
136-2
136-N
MFC
MFC
MFC
134-1
134-2
134-N
Valve
Valve
Valve
Gas Source
Gas Source
Gas Source
132-1
130
132-2
132-N
RF Generator
Matching and Distribution Network
122
124
120
102
108
106
104
110
112
118
114
116
150
Valve
152
Pump
160
System Controller
Load Lock
172
Robot
170

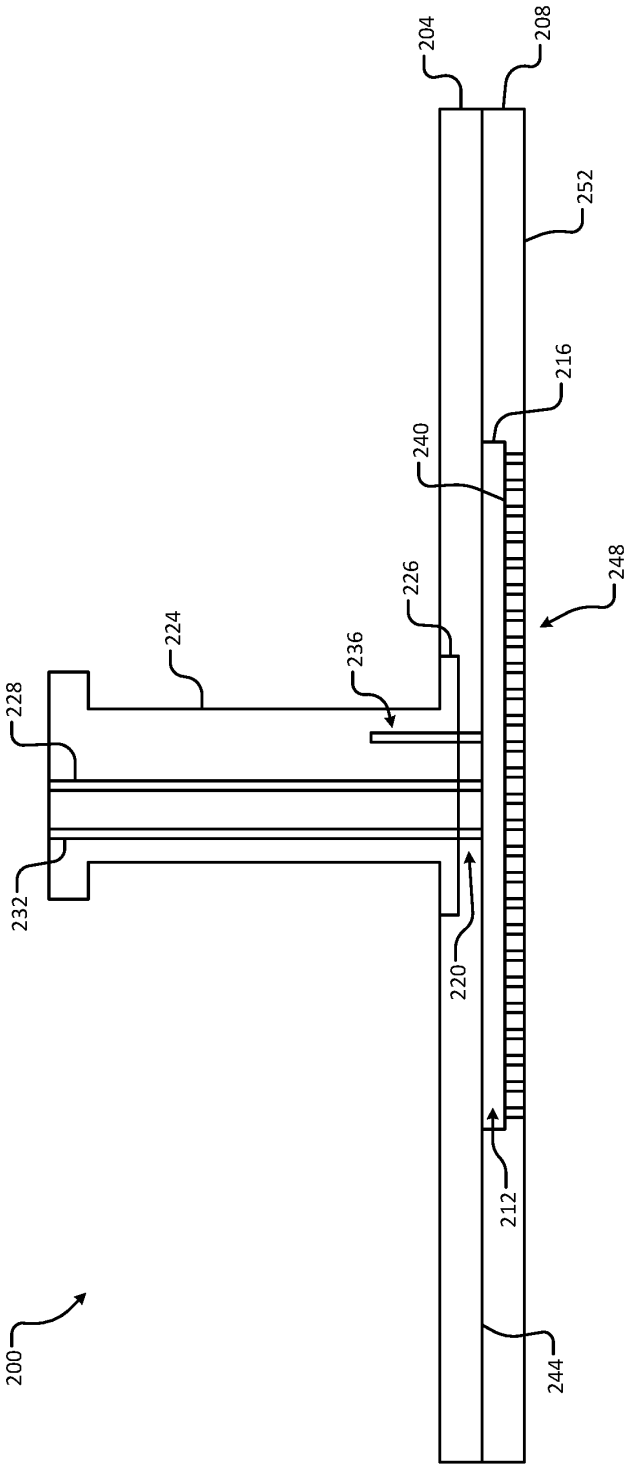

FIG. 2

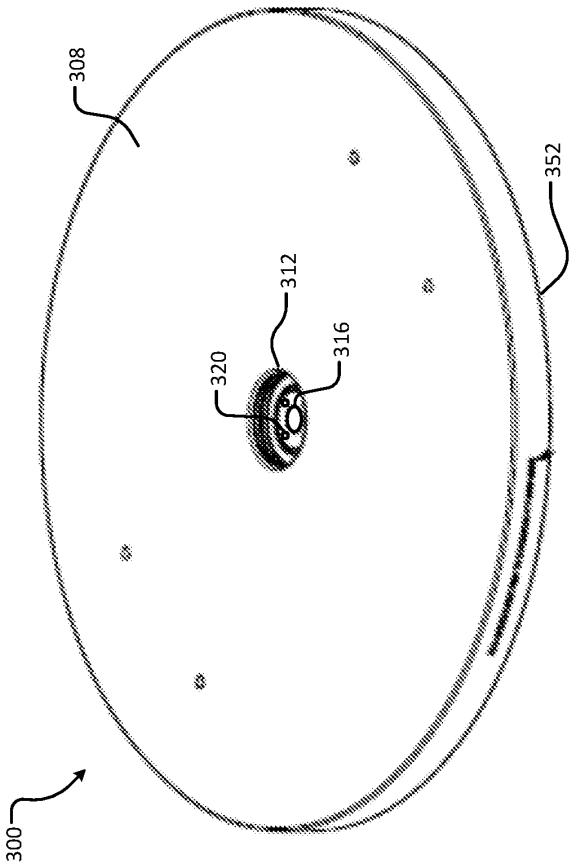
300
308
352
312
316
320

FIG. 3A

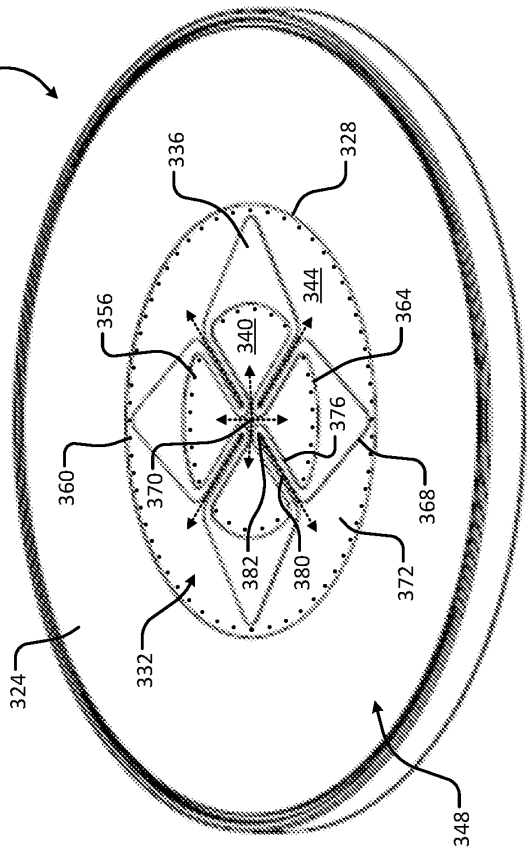
304
336
328
356
344
364
340
376
360
370
368
382
380
372
332
324
348

FIG. 3B

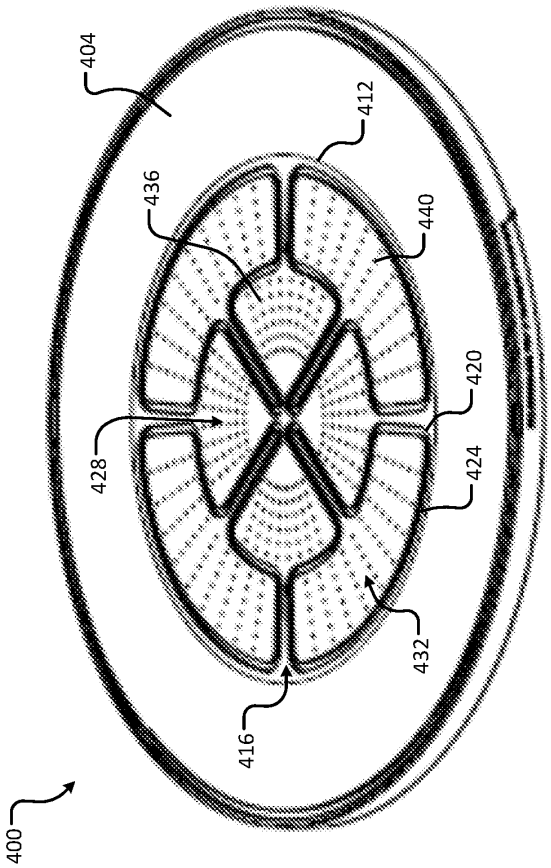

FIG. 4A

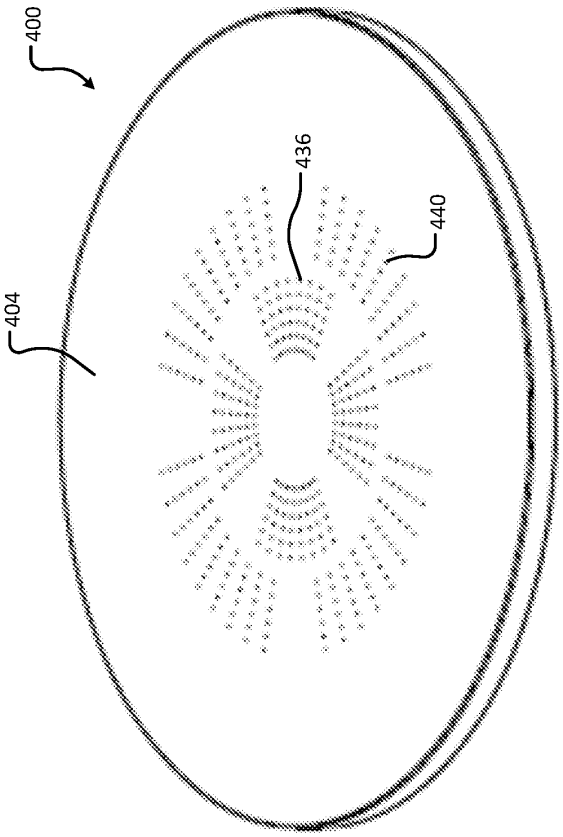

FIG. 4B