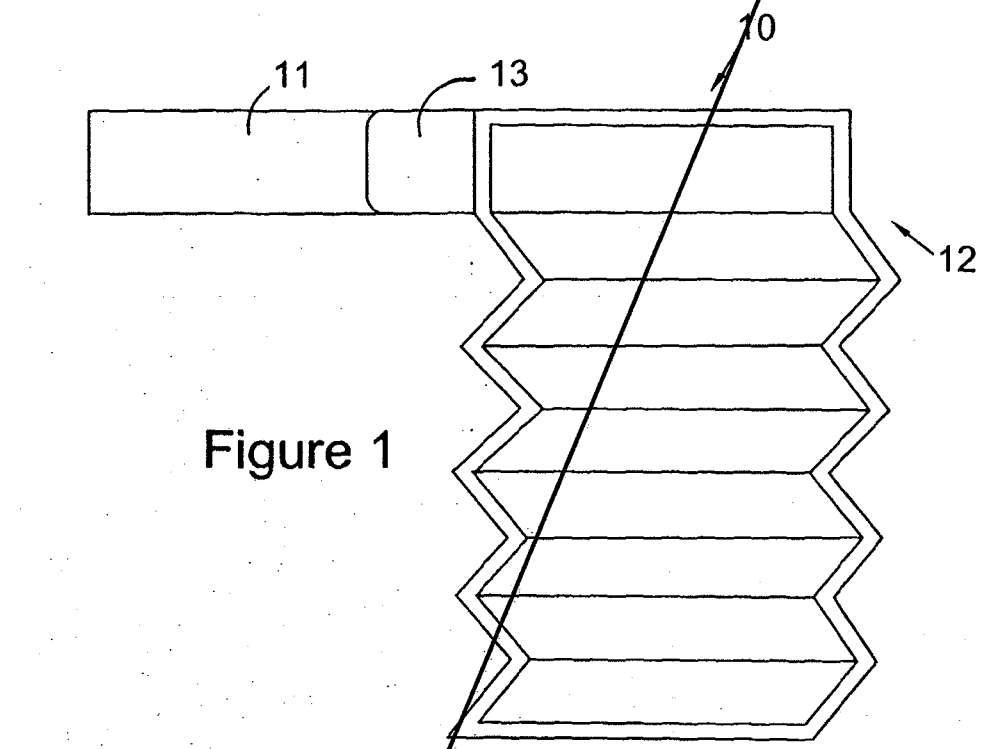


Figure 1

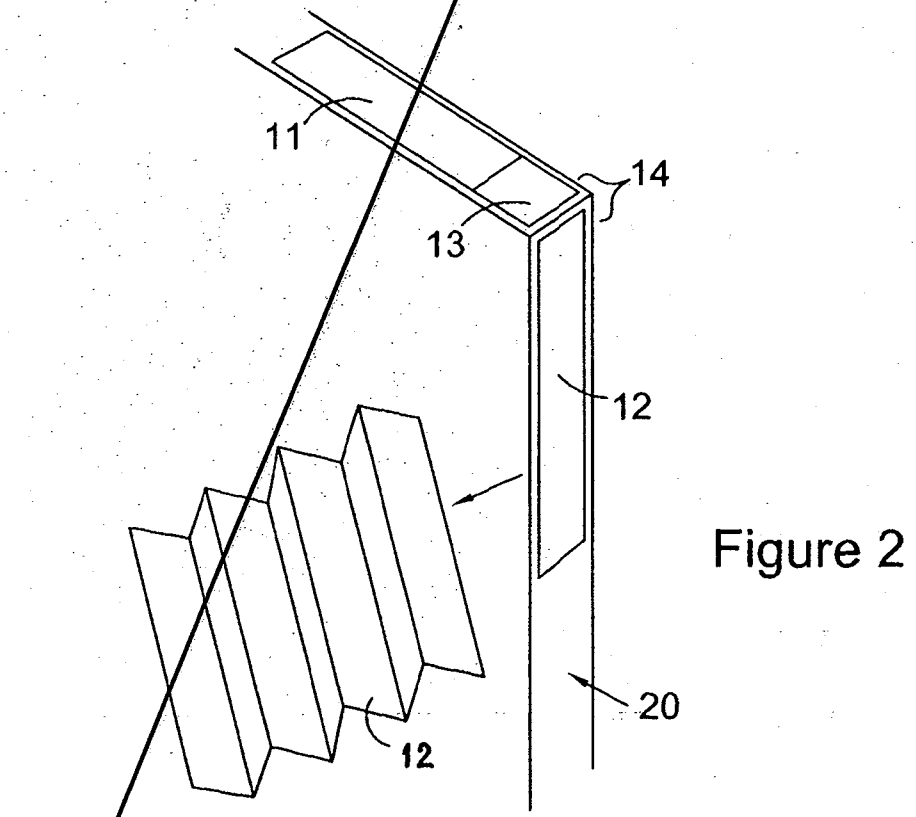


Figure 2

Figure 3A

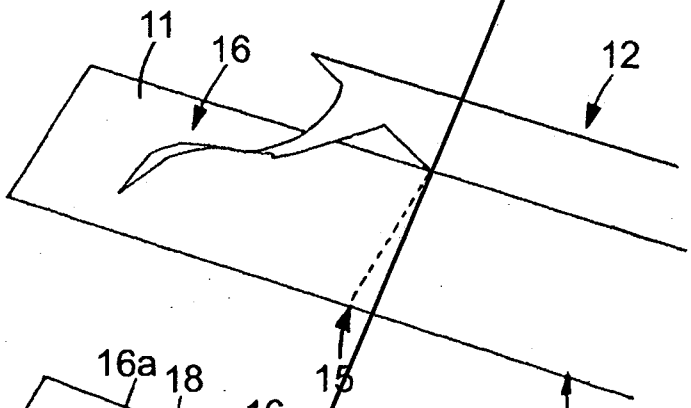


Figure 3B

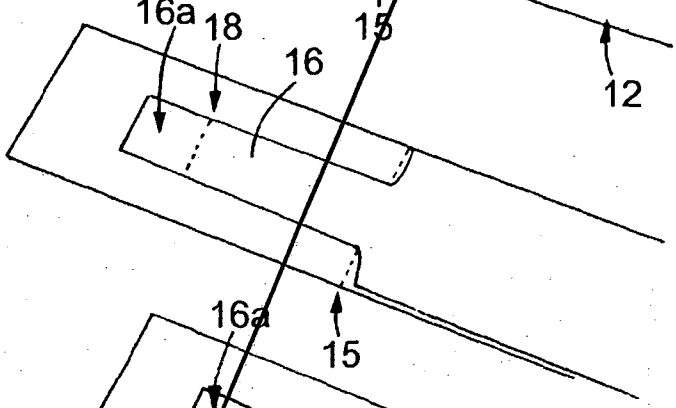


Figure 3C

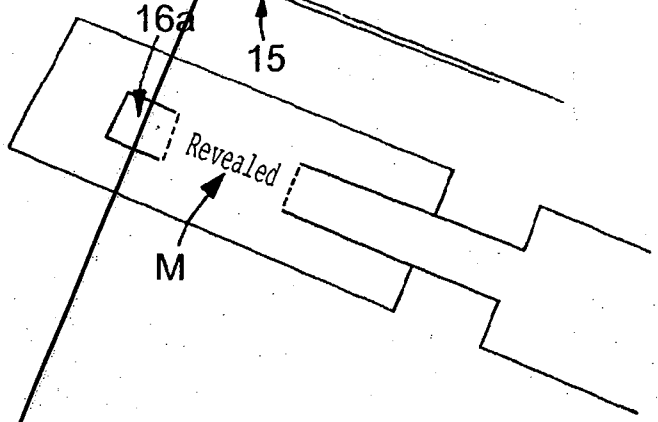


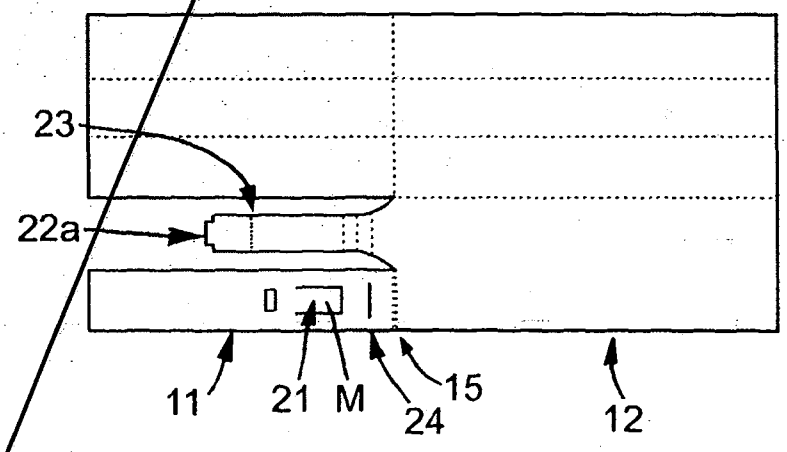


Figure 4A

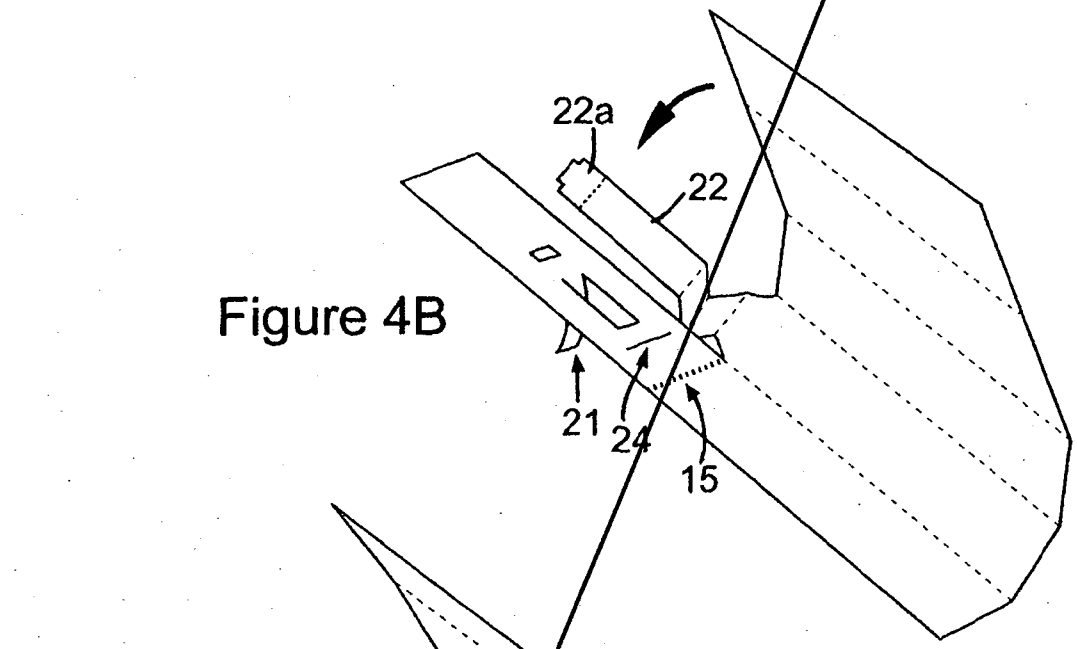


Figure 4B

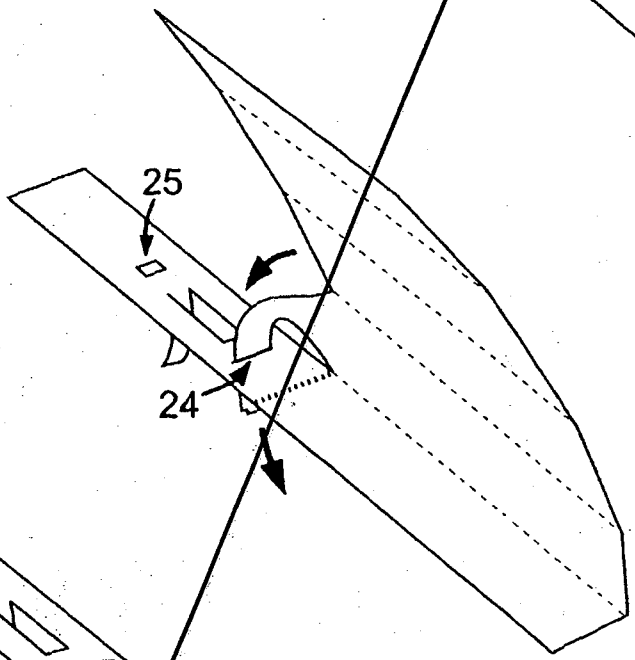


Figure 4C

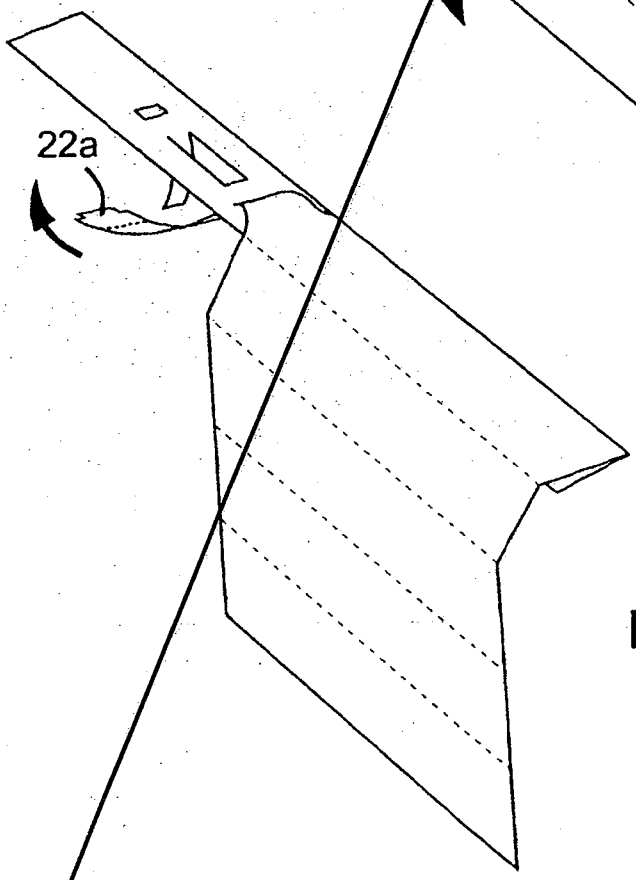


Figure 4D

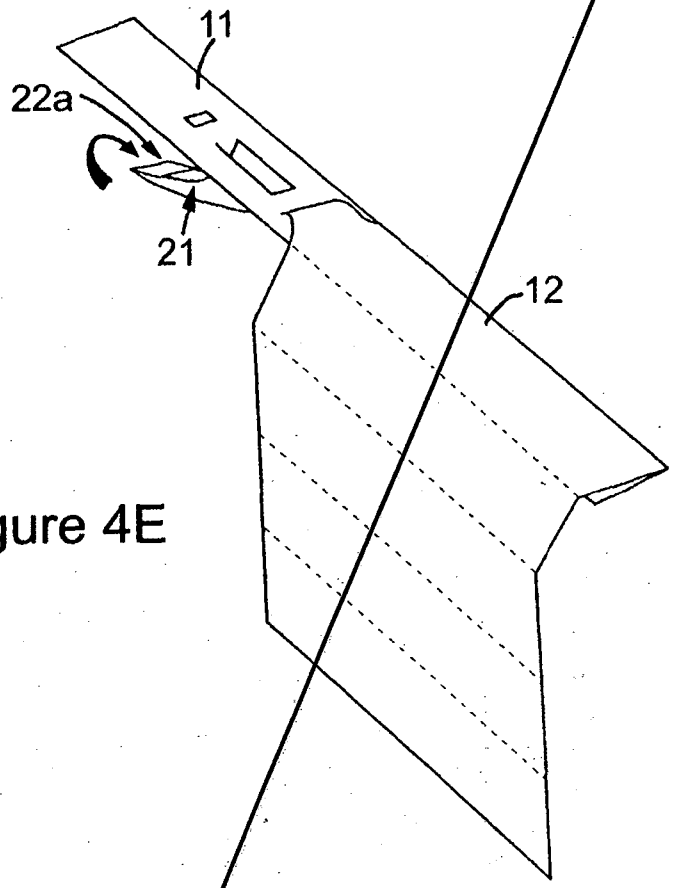


Figure 4E

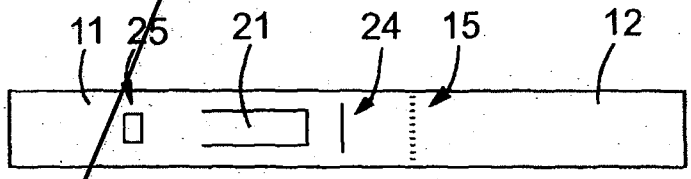


Figure 4F

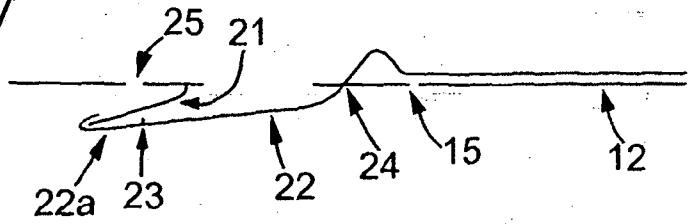


Figure 4G

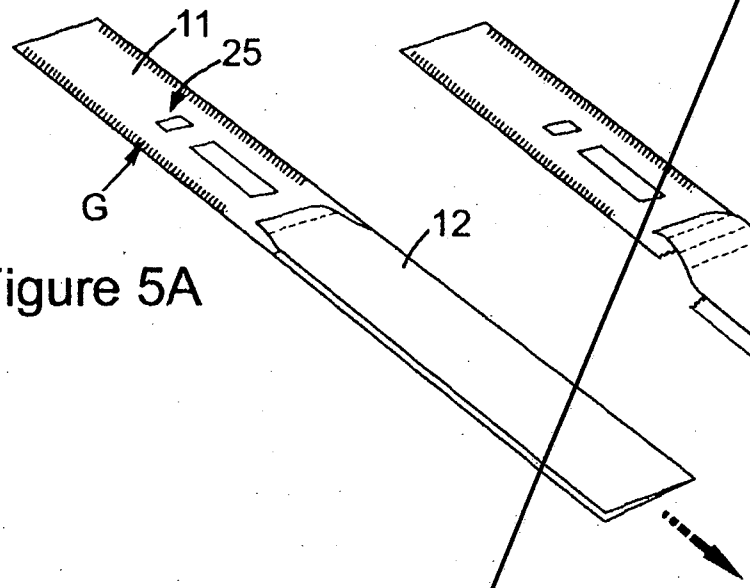


Figure 5A

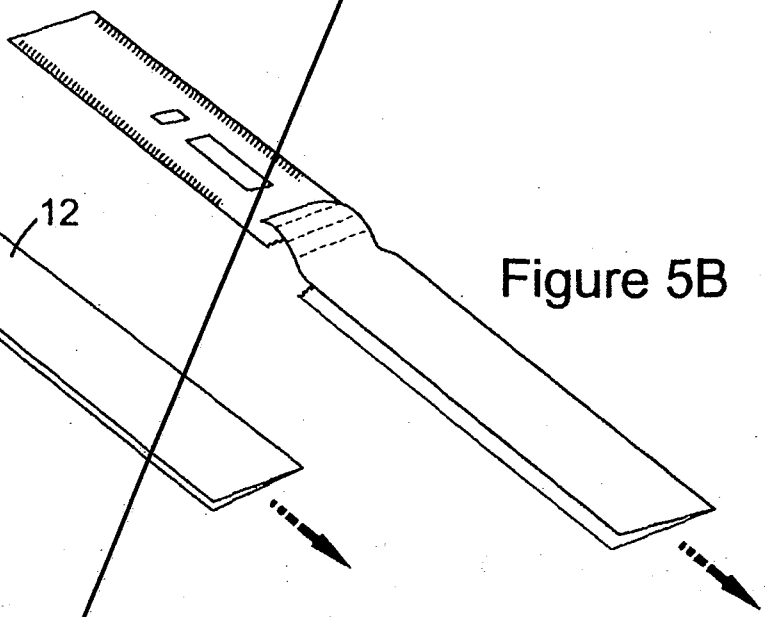

Figure 5B

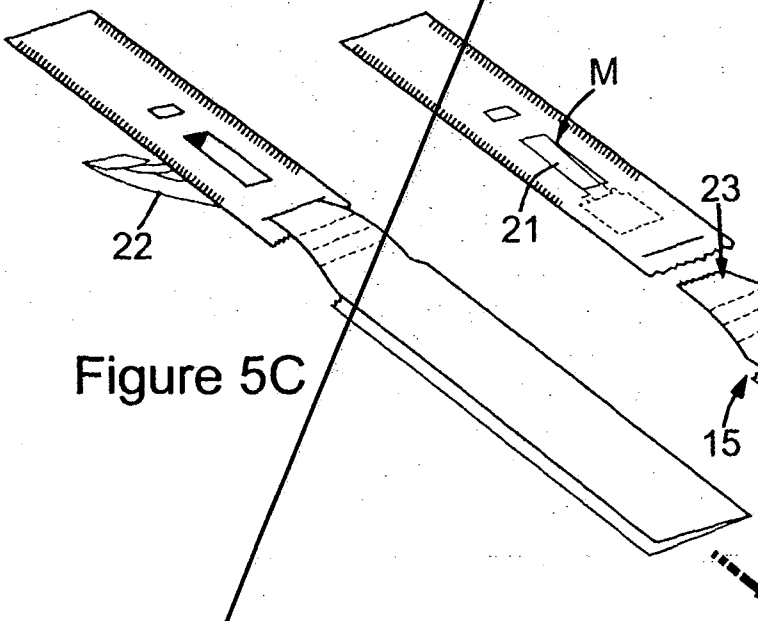


Figure 5C




Figure 5D

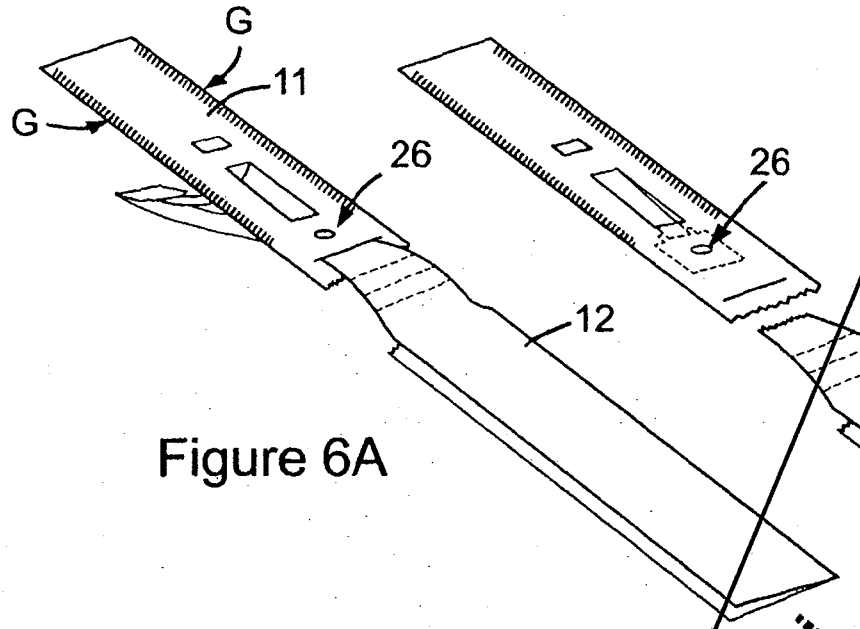


Figure 6A




Figure 6B

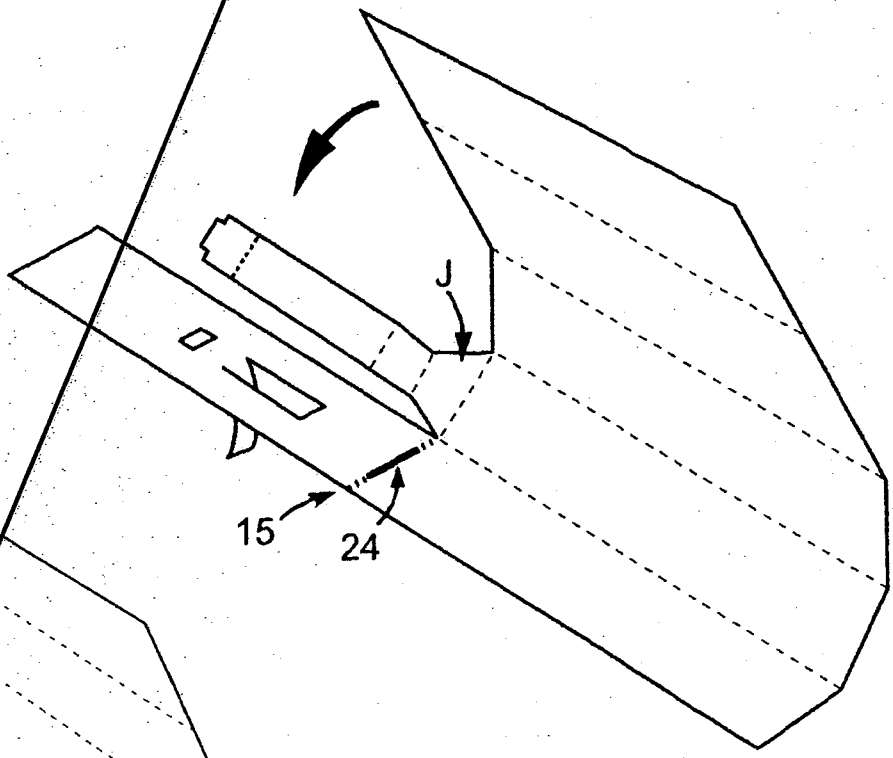


Figure 7

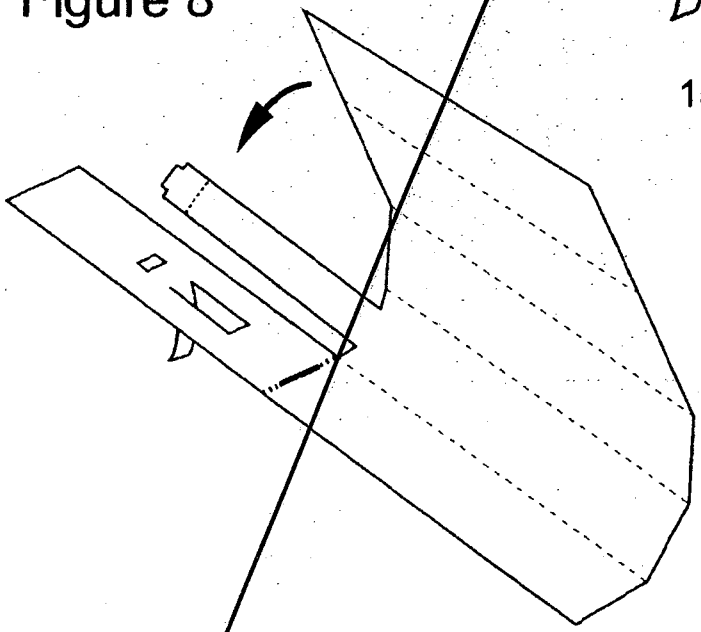

Figure 8

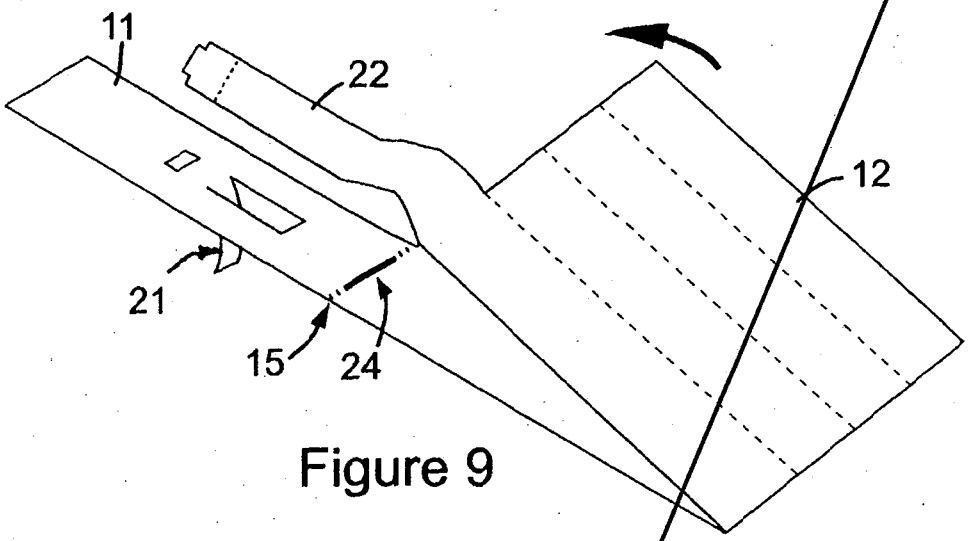


Figure 9

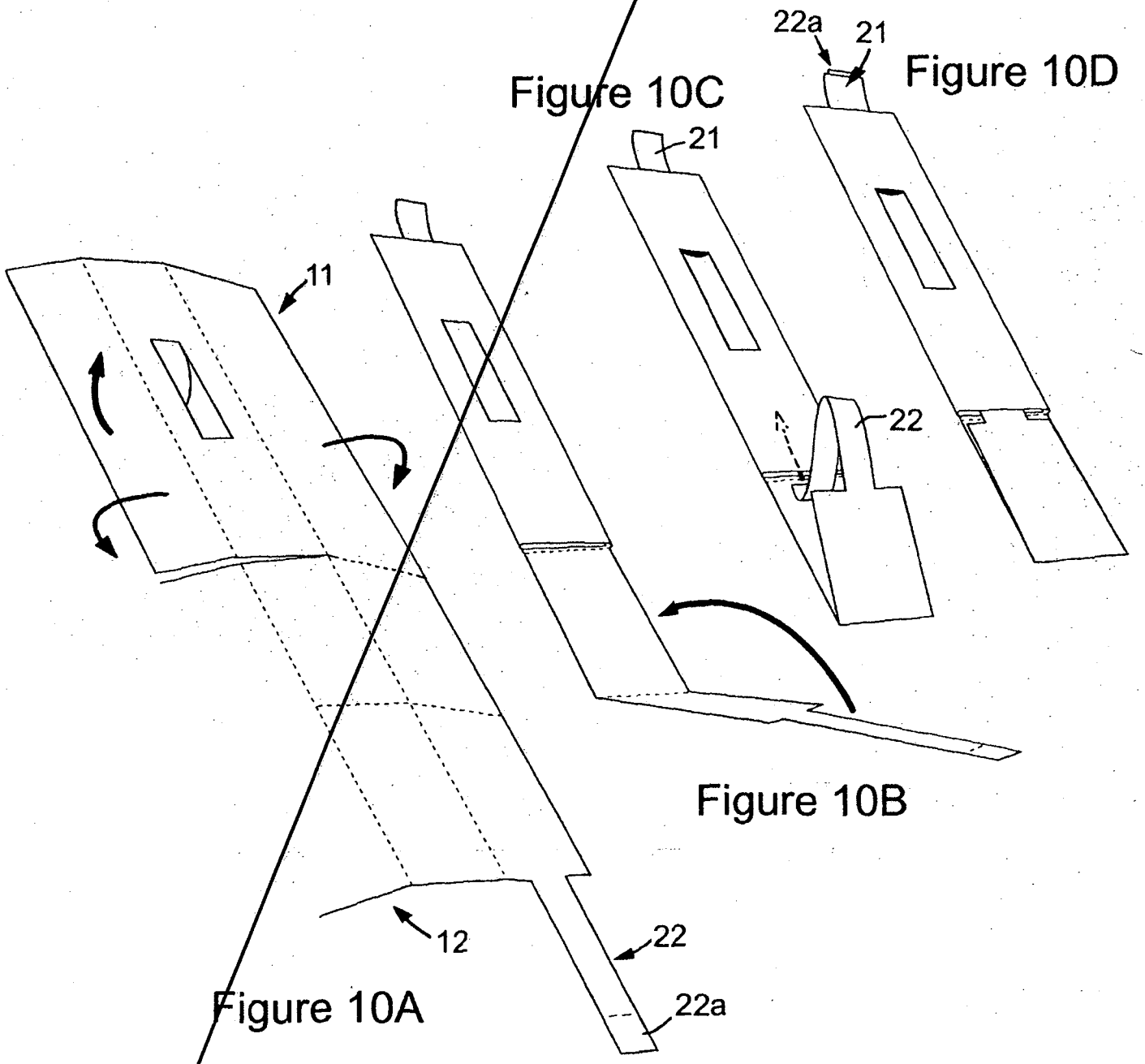


Figure 10C

Figure 10D

Figure 10B

Figure 10A

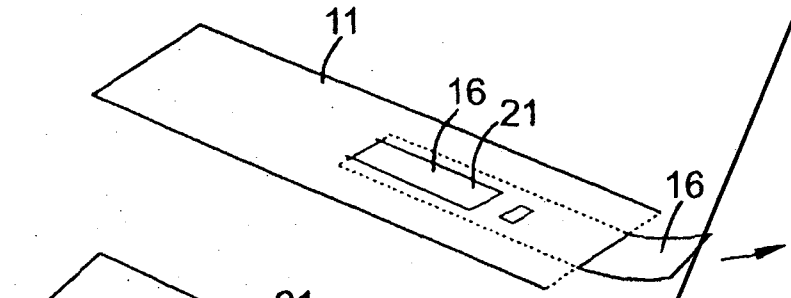


Figure 11A

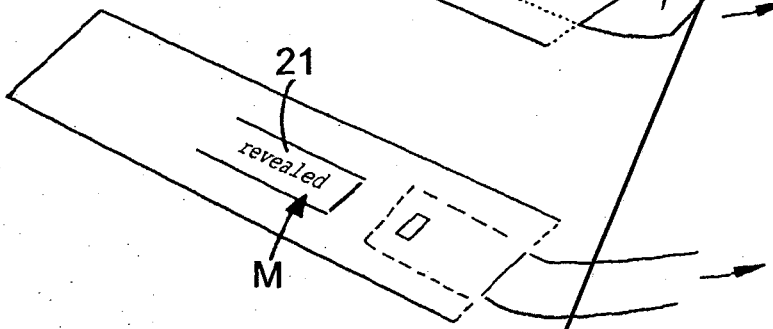


Figure 11B

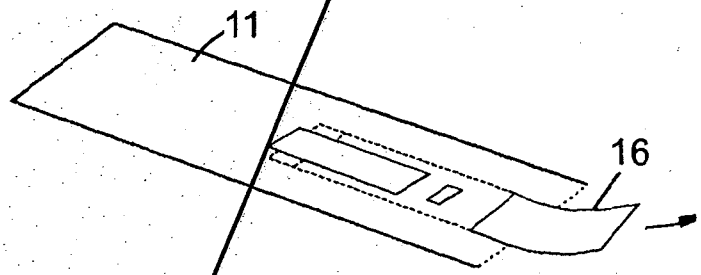


Figure 12A

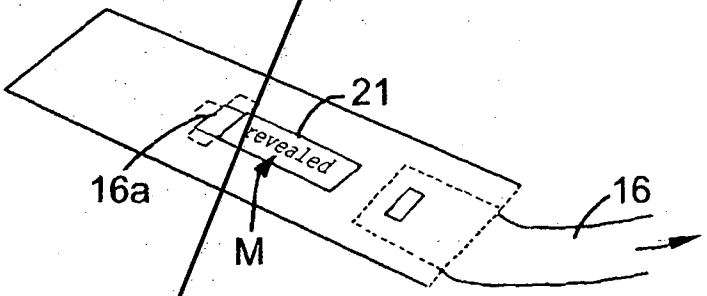


Figure 12B

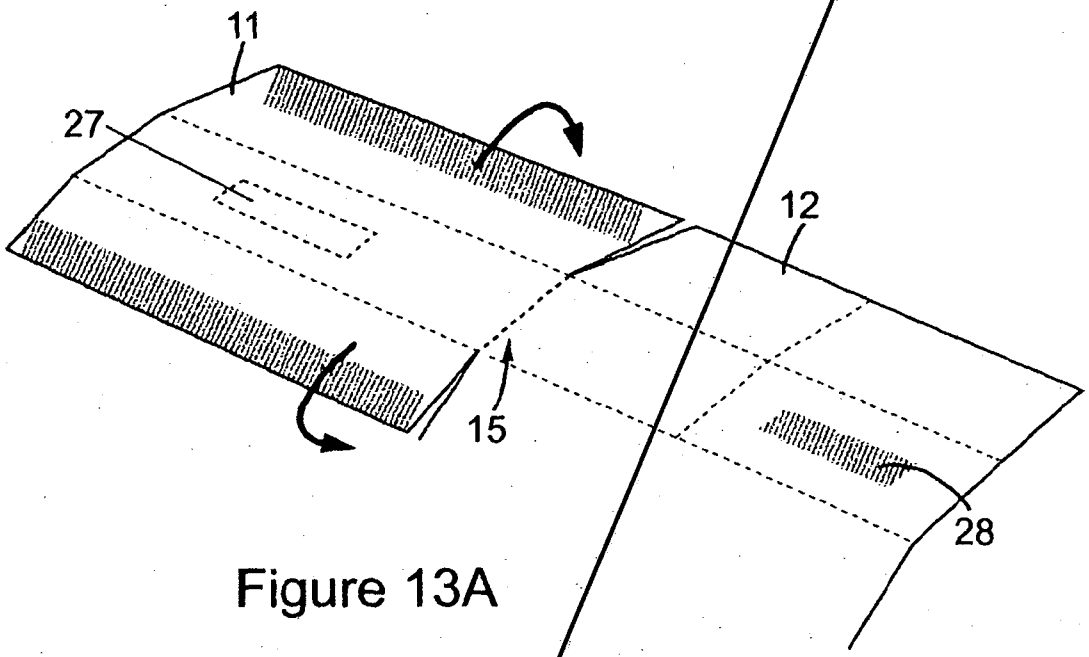


Figure 13A

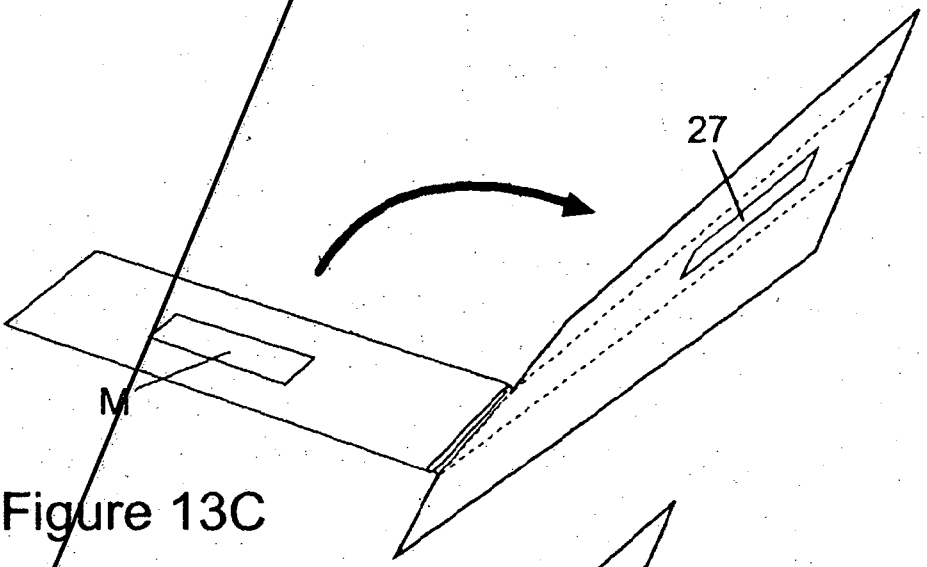


Figure 13C

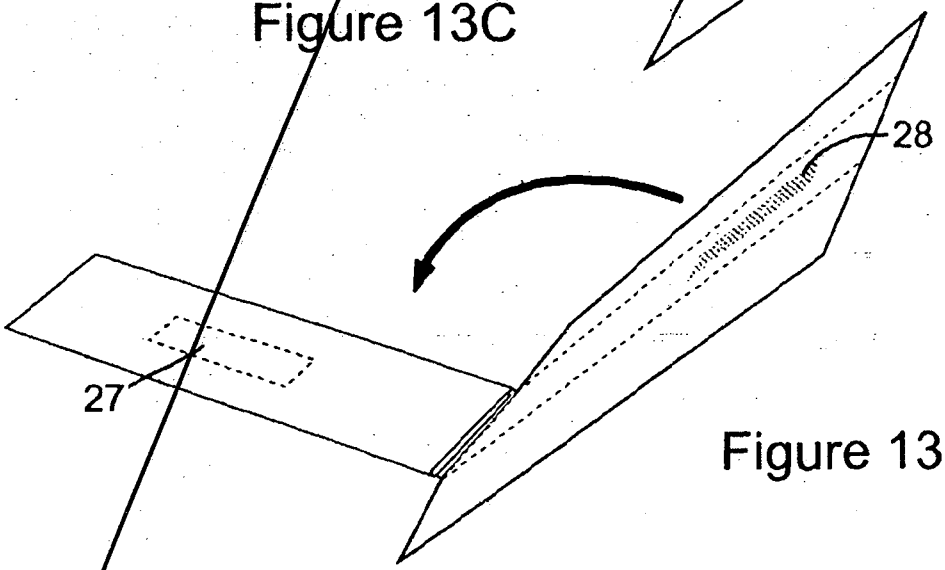


Figure 13B

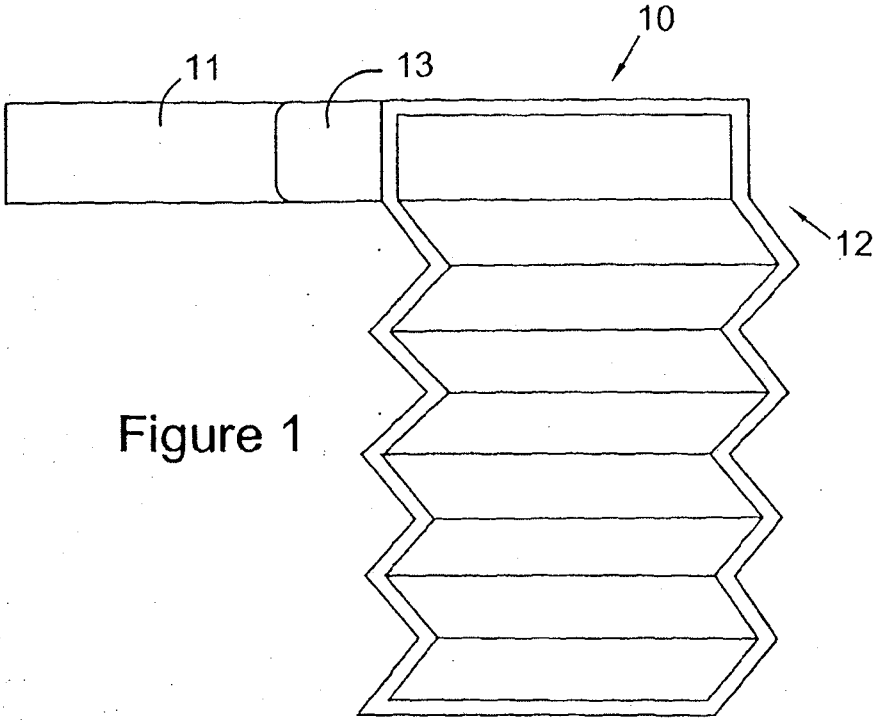


Figure 1

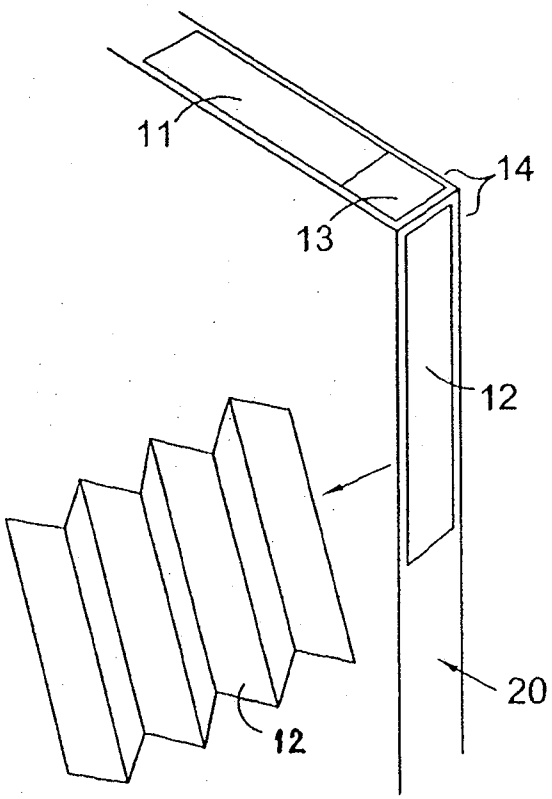


Figure 2

Figure 3A

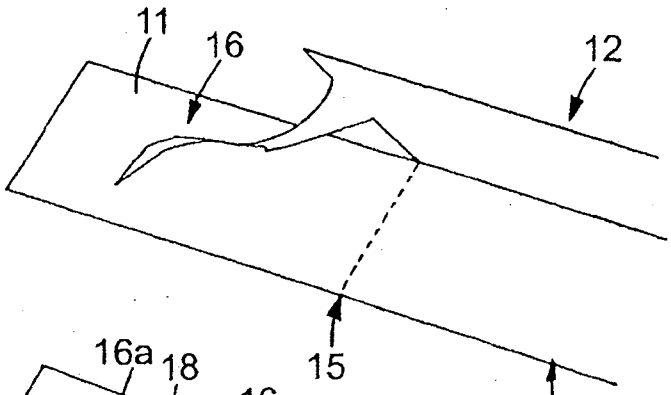


Figure 3B

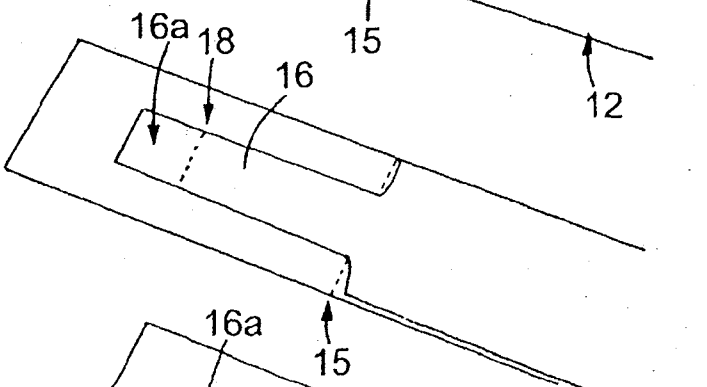


Figure 3C

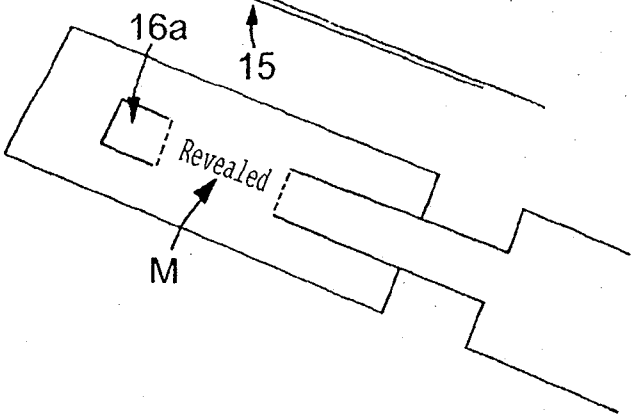


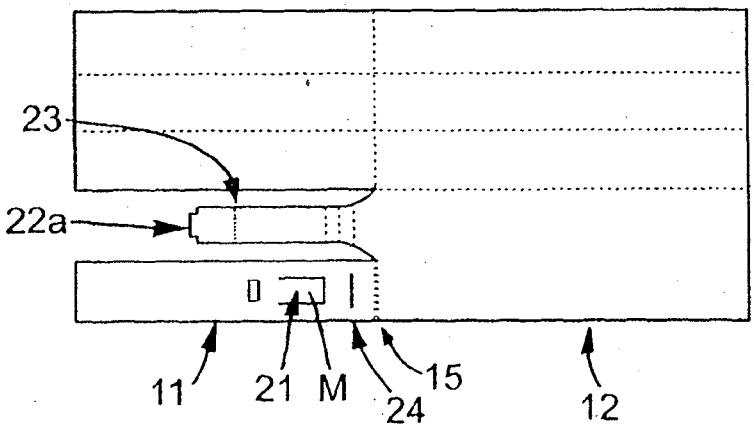


Figure 4A

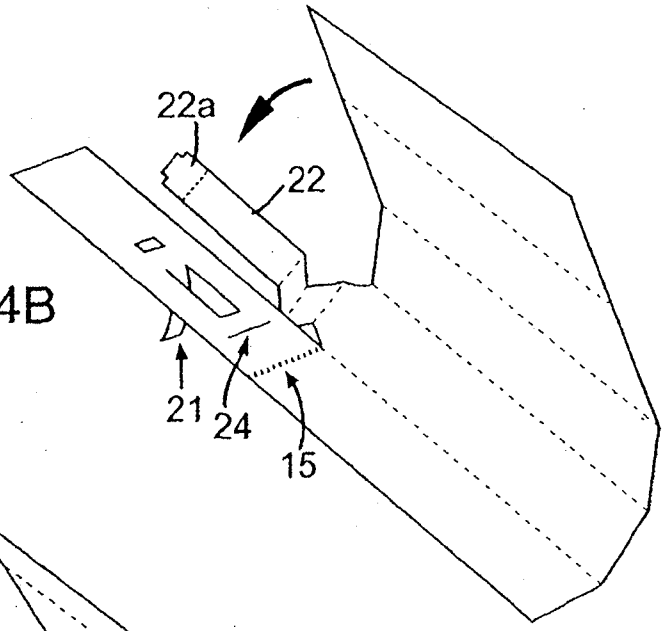


Figure 4B

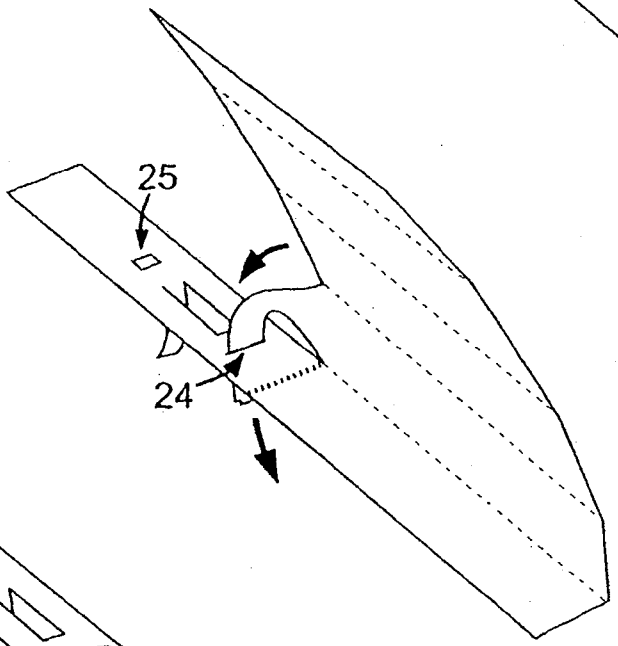


Figure 4C

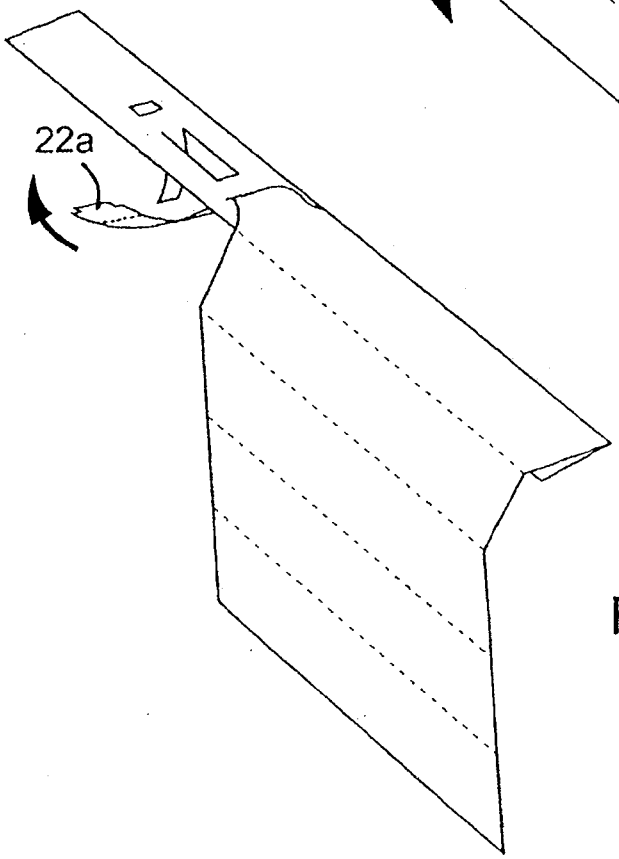


Figure 4D

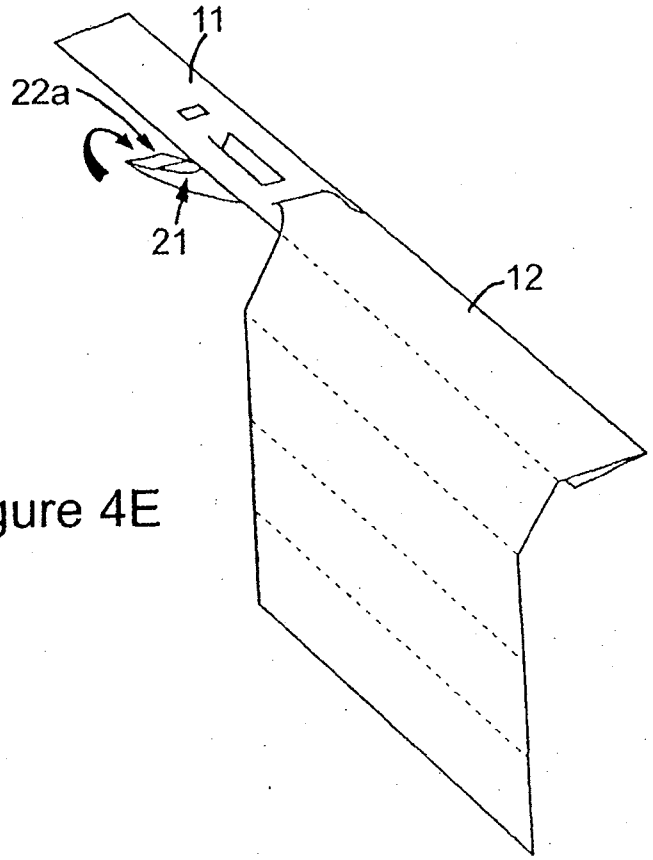


Figure 4E

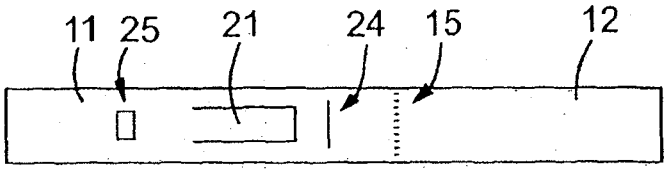


Figure 4F

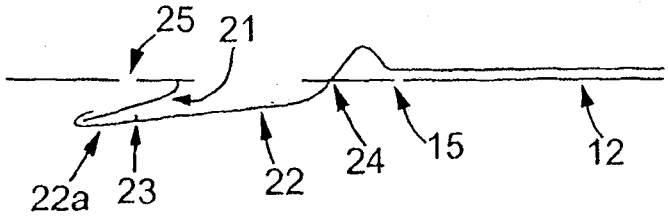


Figure 4G

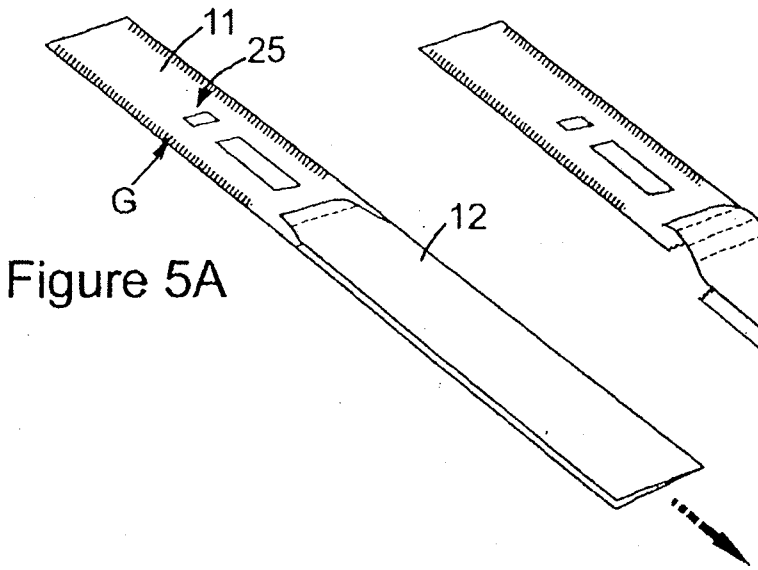


Figure 5A

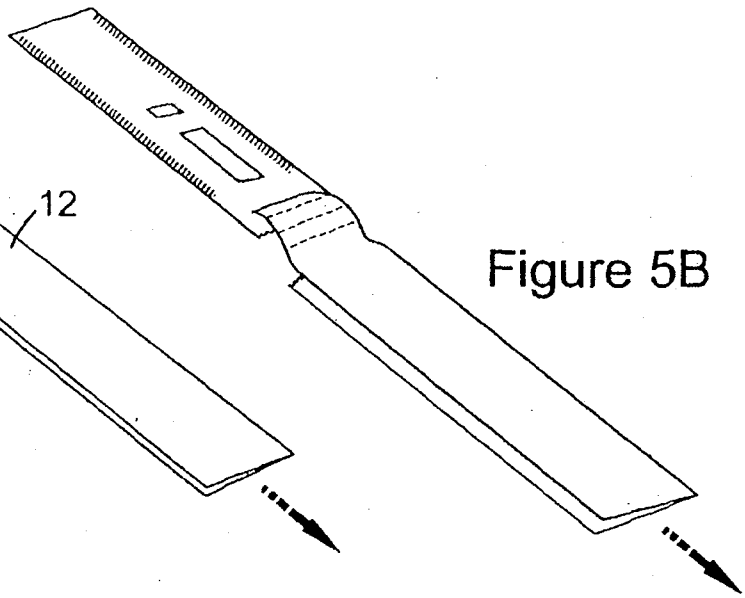

Figure 5B

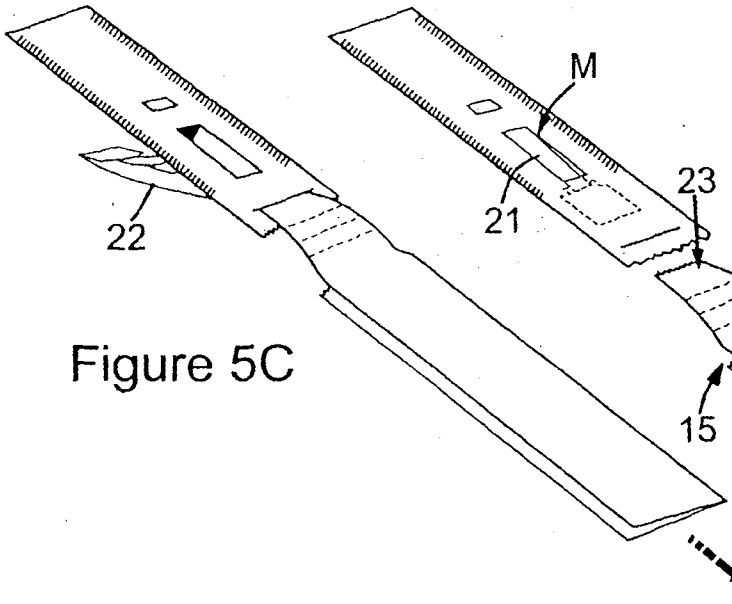


Figure 5C




Figure 5D

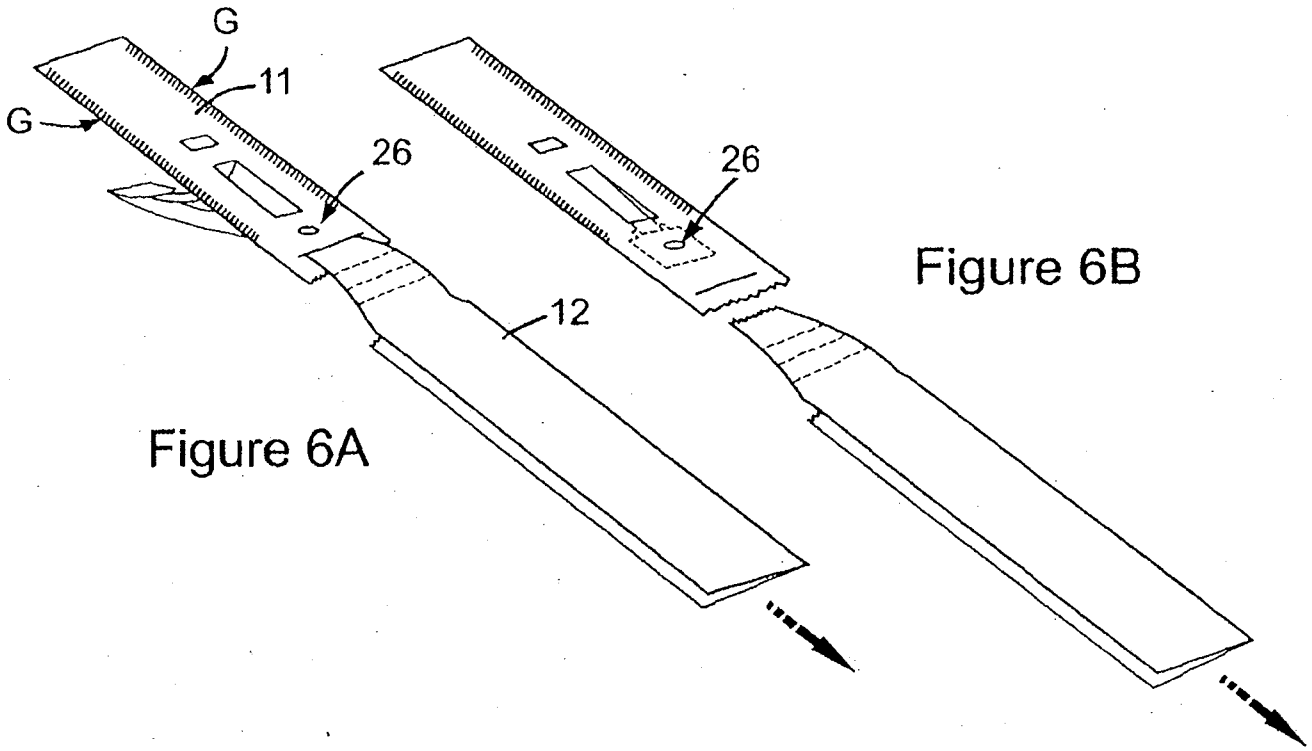


Figure 6A

Figure 6B

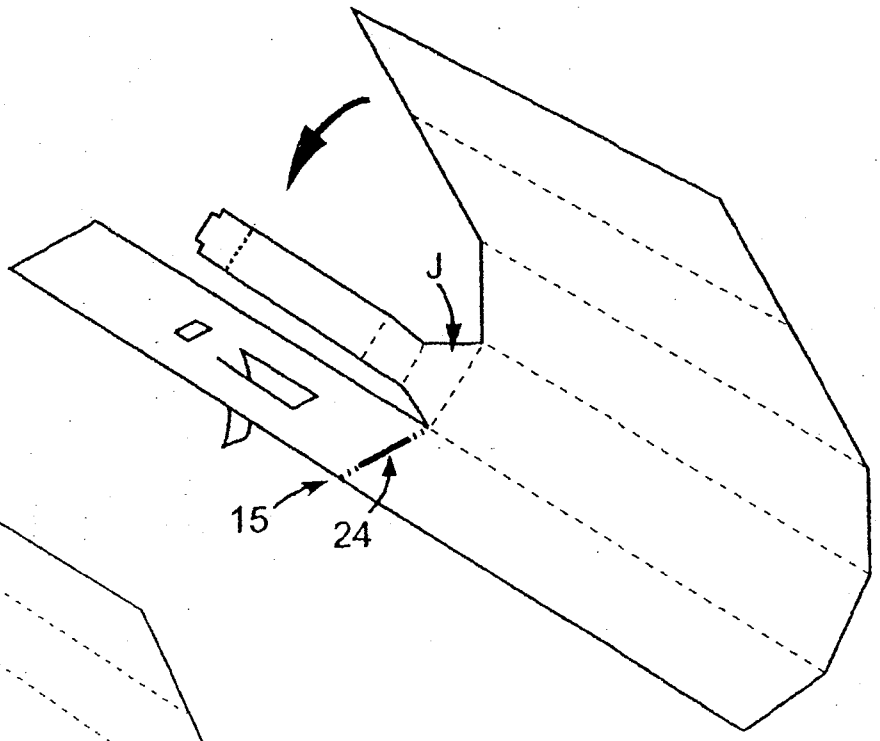


Figure 7

Figure 8

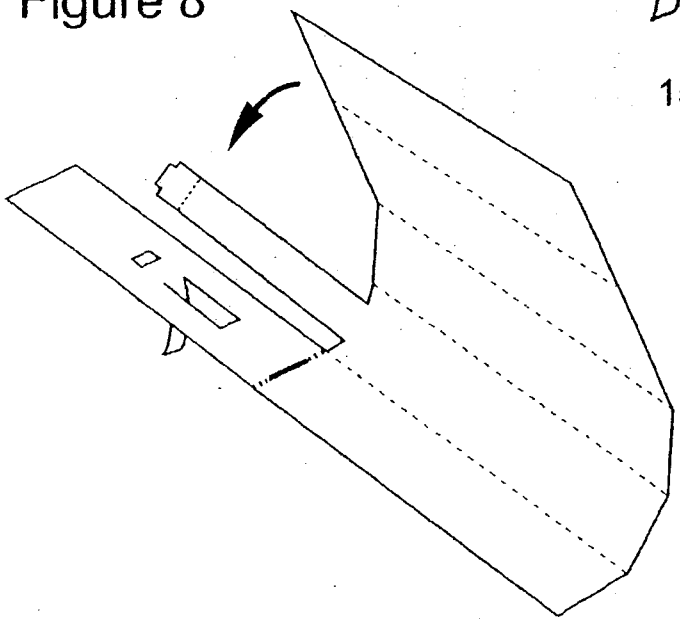

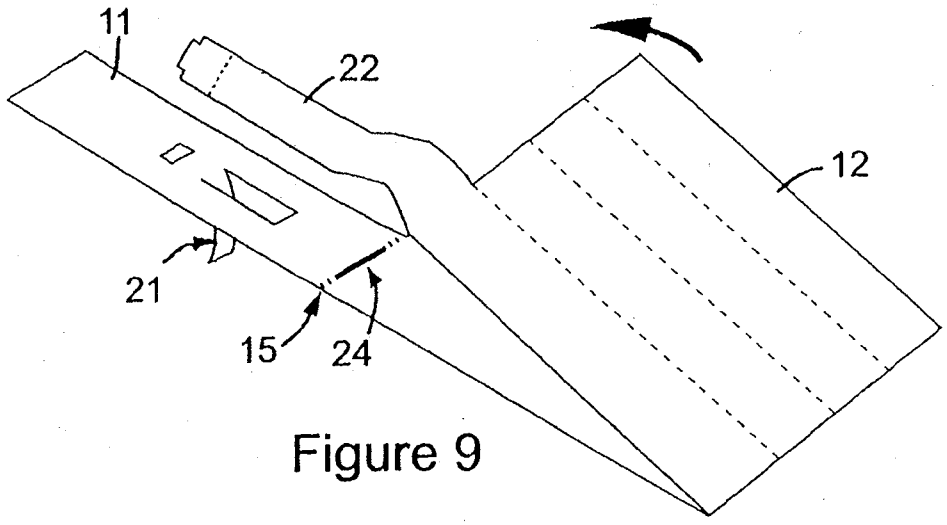


Figure 9




Figure 10C

Figure 10D

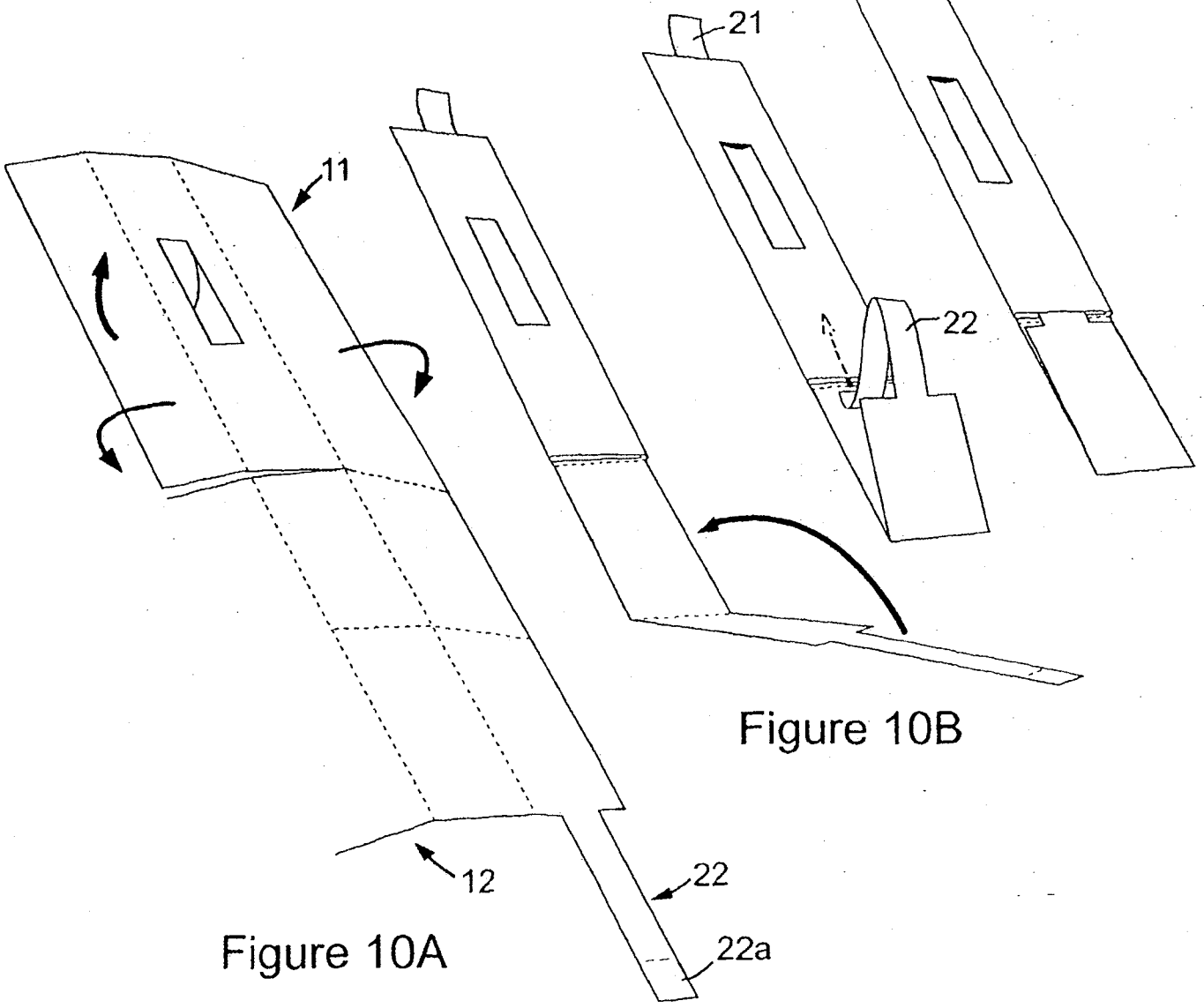


Figure 10B

Figure 10A

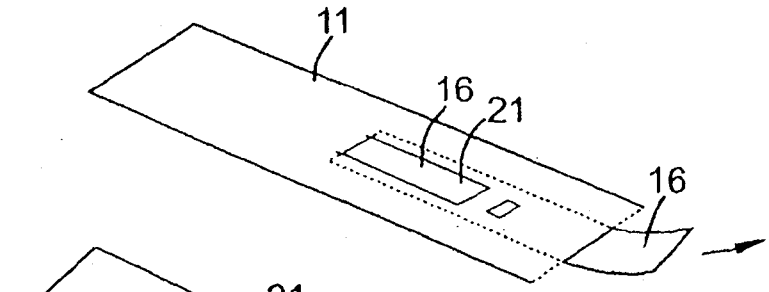


Figure 11A

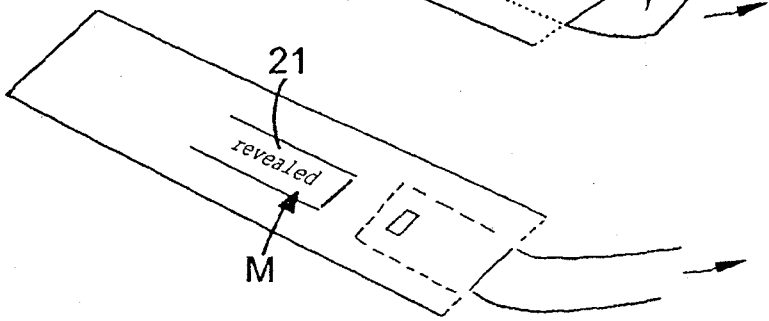


Figure 11B

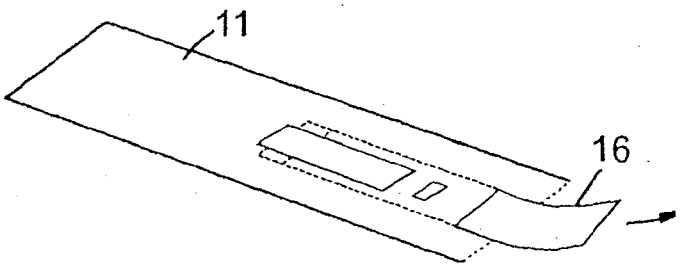


Figure 12A

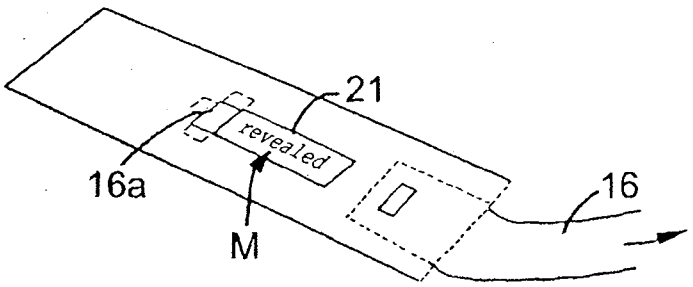


Figure 12B

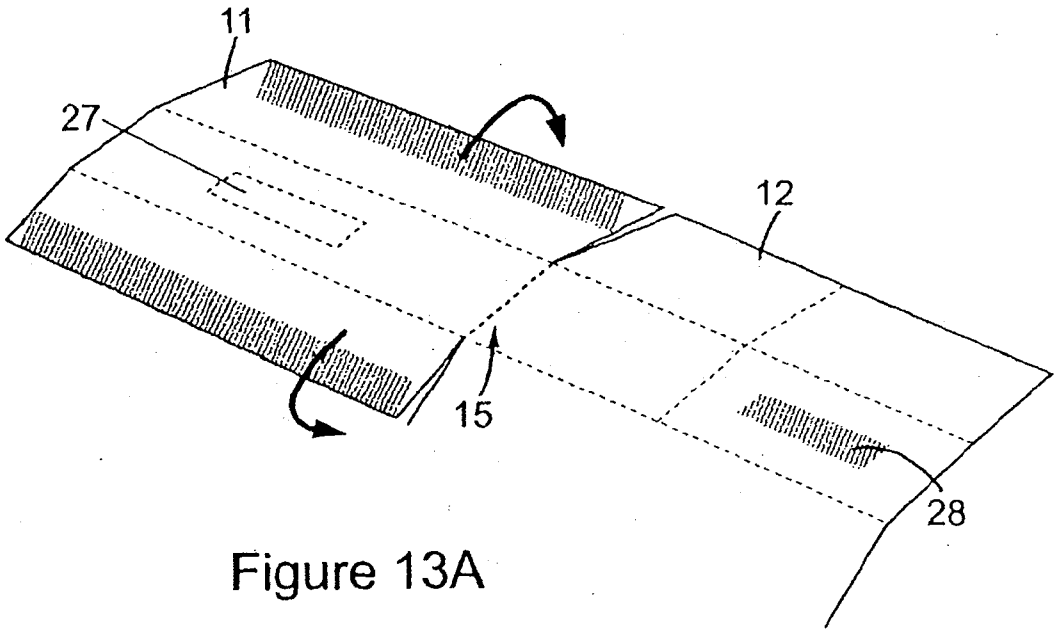


Figure 13A

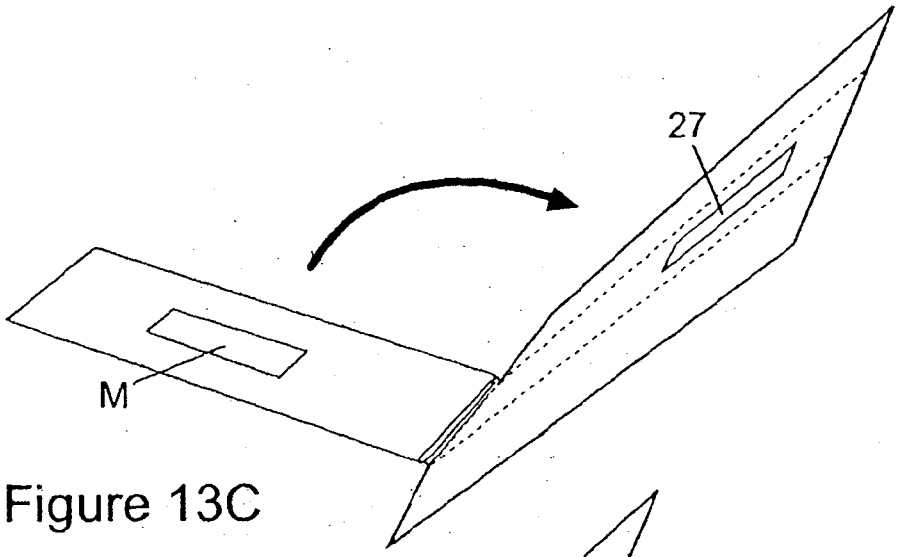


Figure 13C

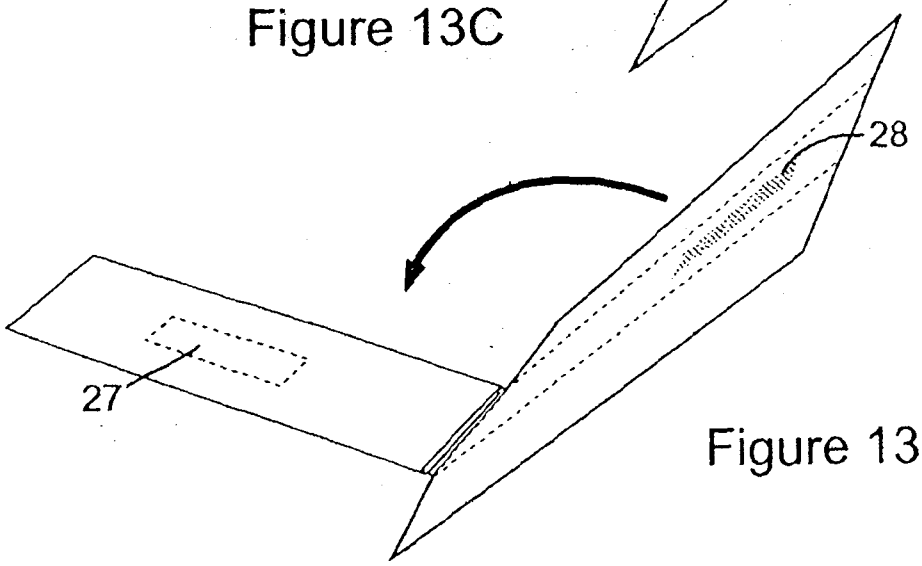


Figure 13B