FIG. 1

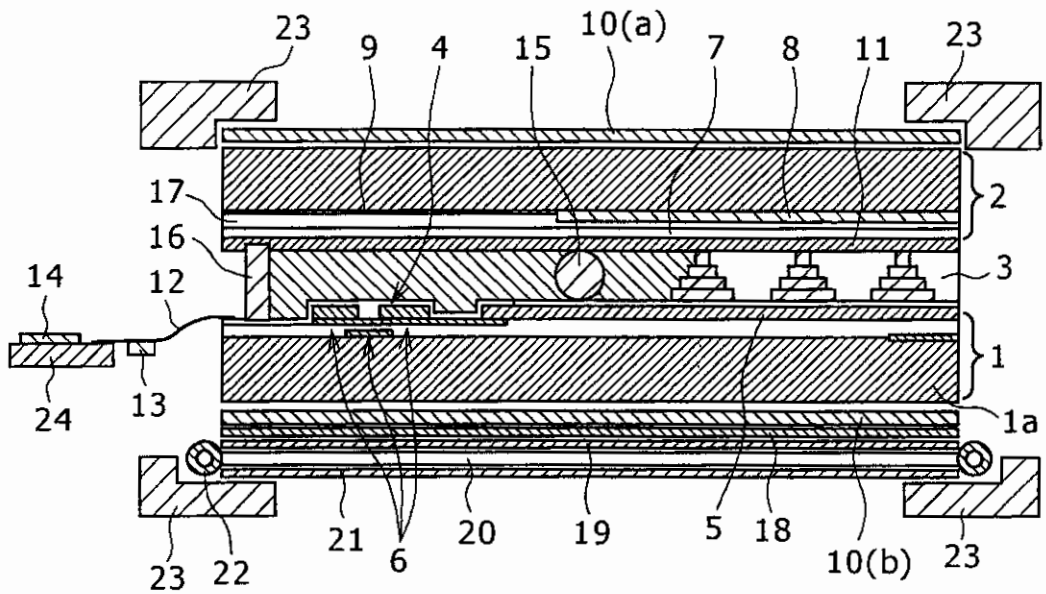


FIG. 2

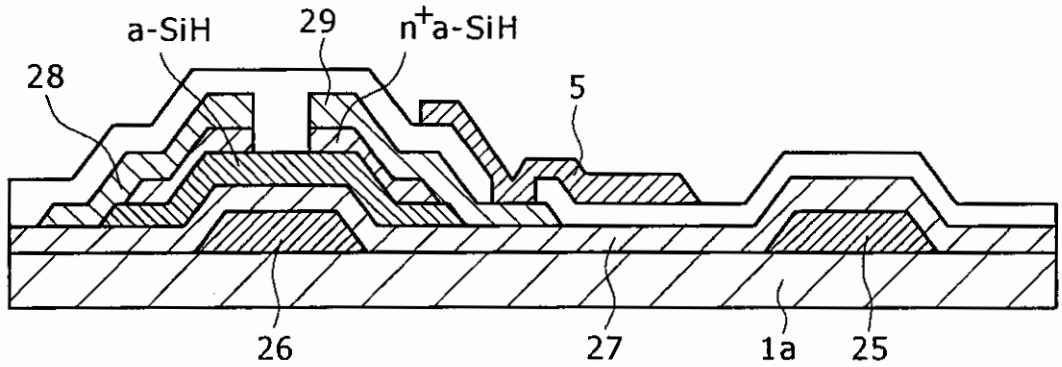


FIG. 3

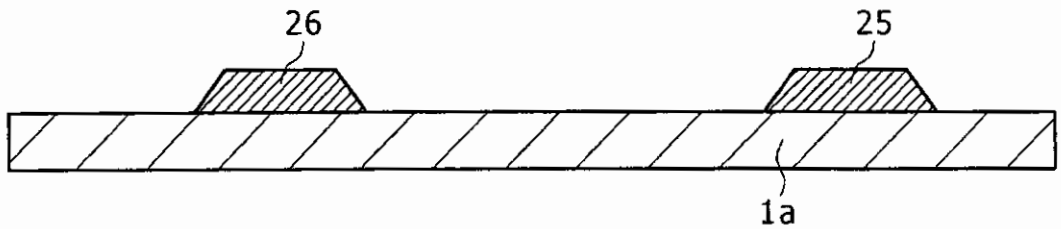

FIG. 4

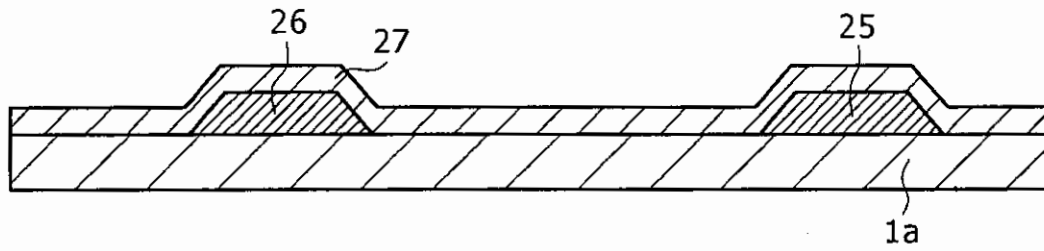


FIG. 5

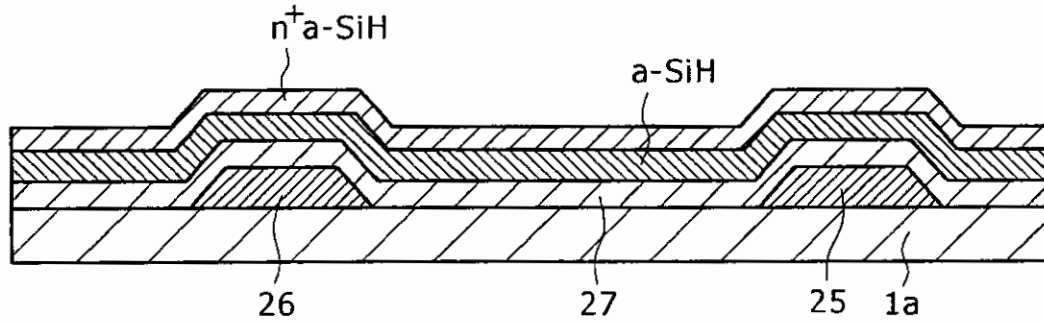


FIG. 6

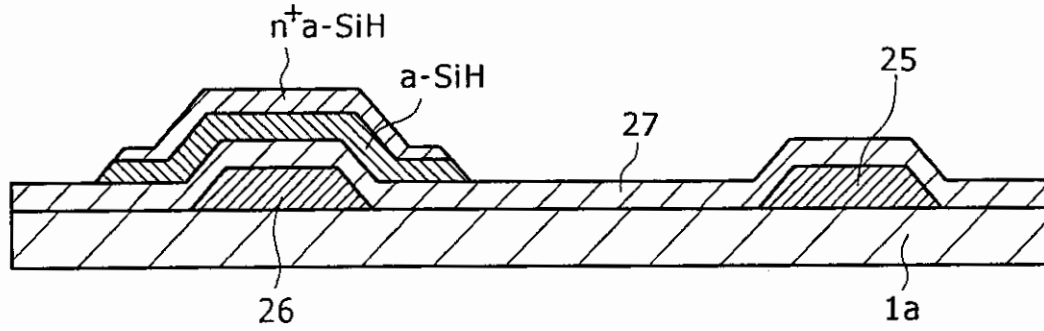

FIG. 7

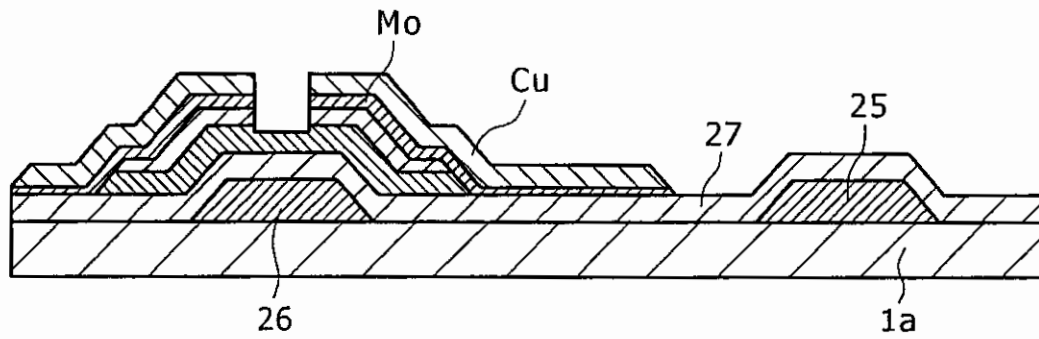


FIG. 8

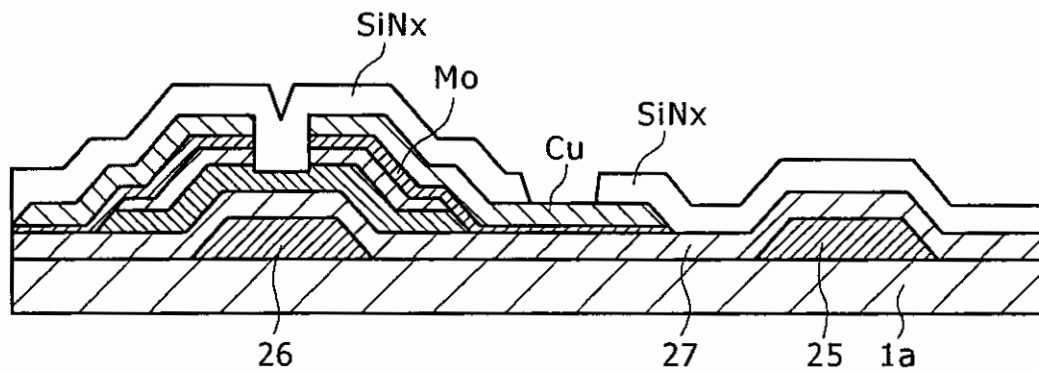


FIG. 9

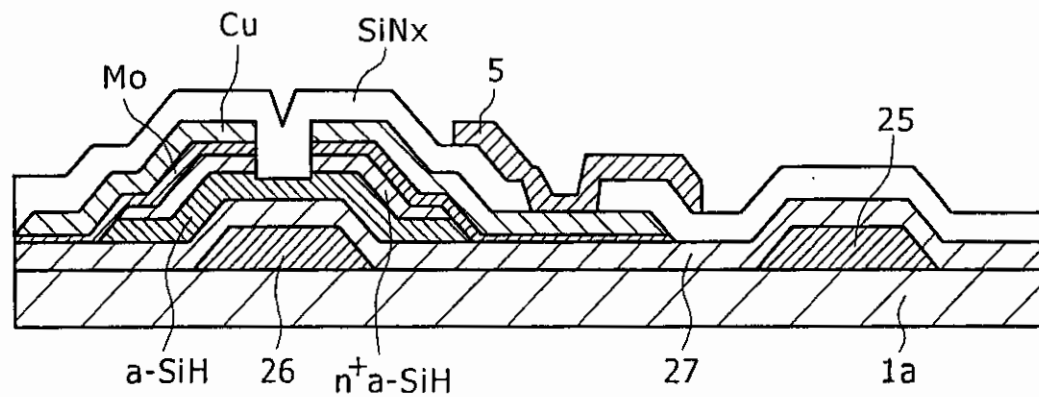

FIG. 10

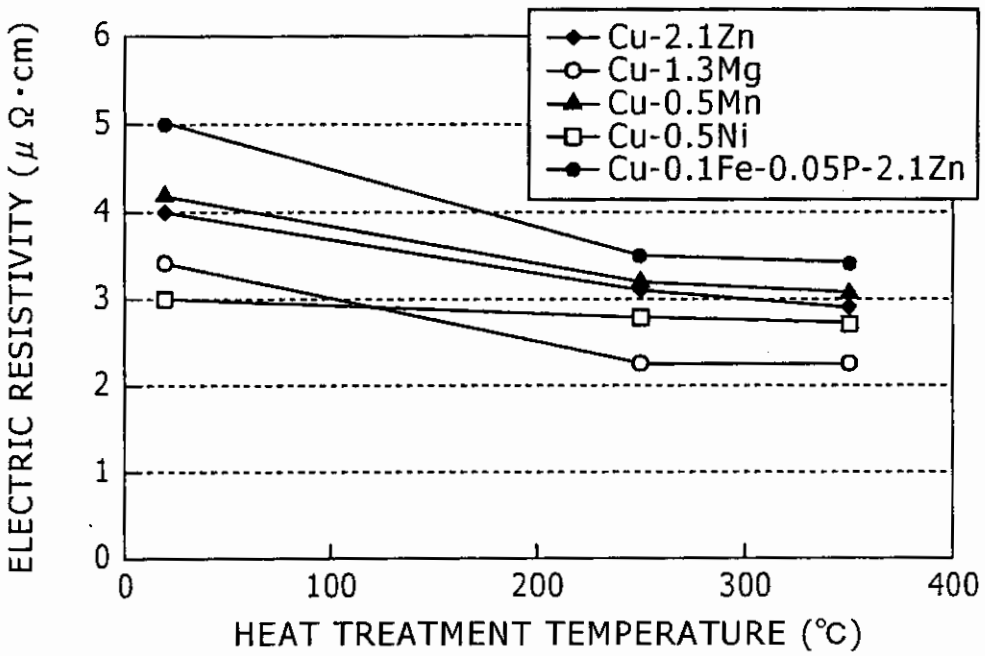
ELECTRIC RESISTIVITY (μΩ·cm)
HEAT TREATMENT TEMPERATURE (℃)
Cu-2.1Zn
Cu-1.3Mg
Cu-0.5Mn
Cu-0.5Ni
Cu-0.1Fe-0.05P-2.1Zn
0
1
2
3
4
5
6
0
100
200
300
400

FIG. 11

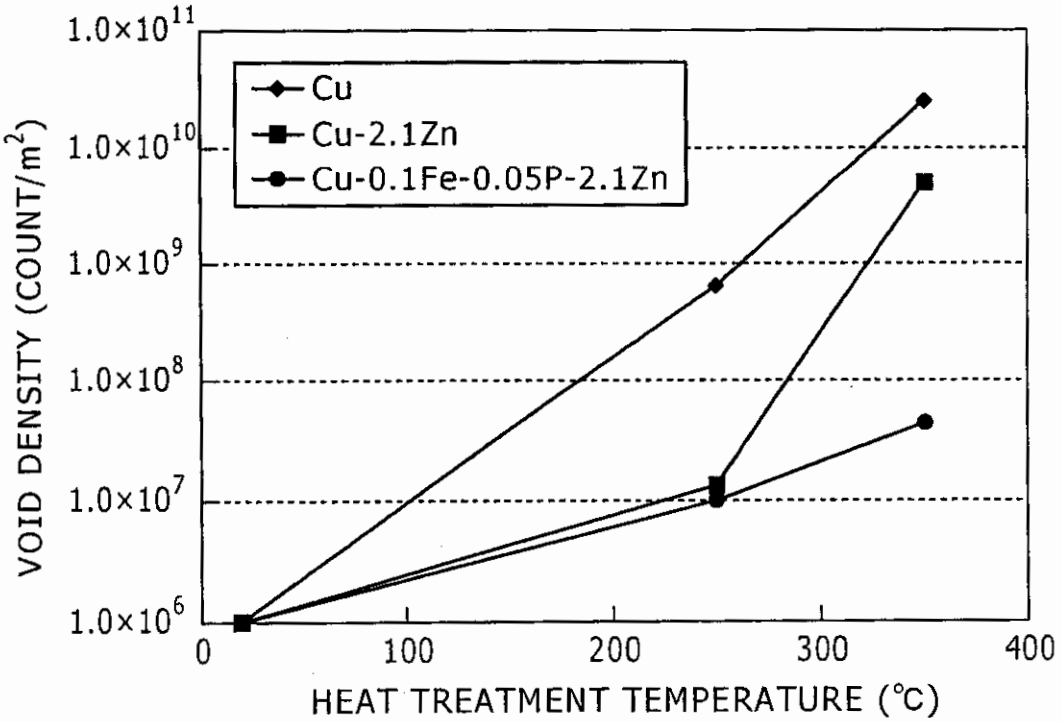
VOID DENSITY (COUNT/m²)
HEAT TREATMENT TEMPERATURE (℃)
Cu
Cu-2.1Zn
Cu-0.1Fe-0.05P-2.1Zn
1.0×10¹¹
1.0×10¹⁰
1.0×10⁹
1.0×10⁸
1.0×10⁷
1.0×10⁶
0
100
200
300
400