Fig. 1

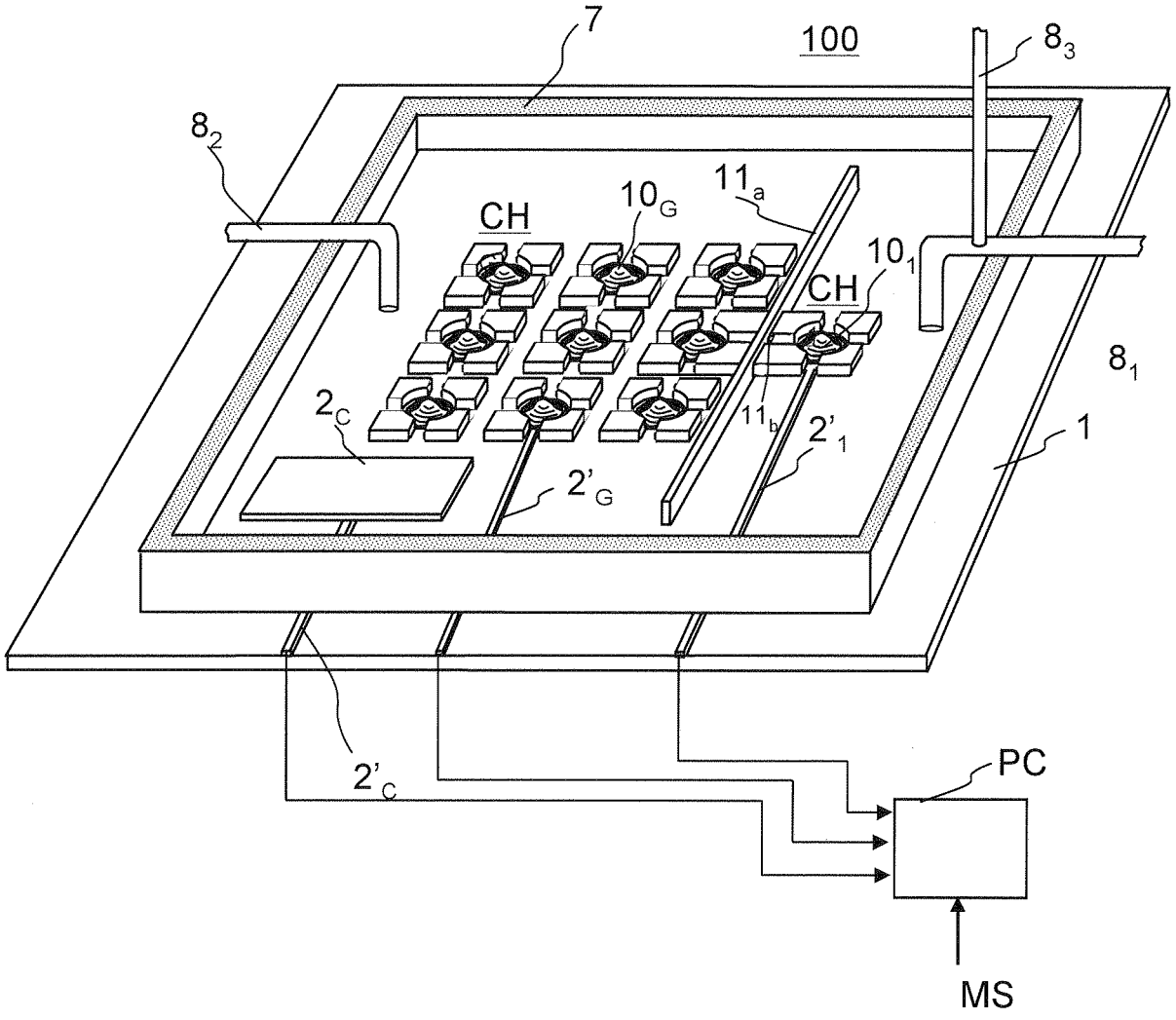

Fig. 2

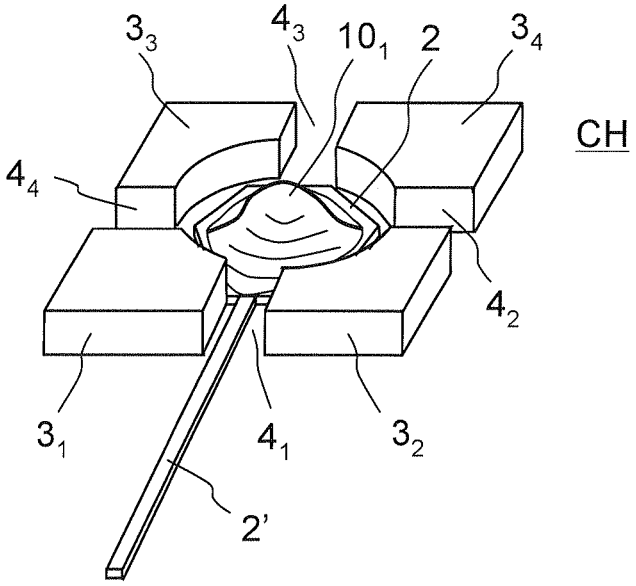

Fig. 3

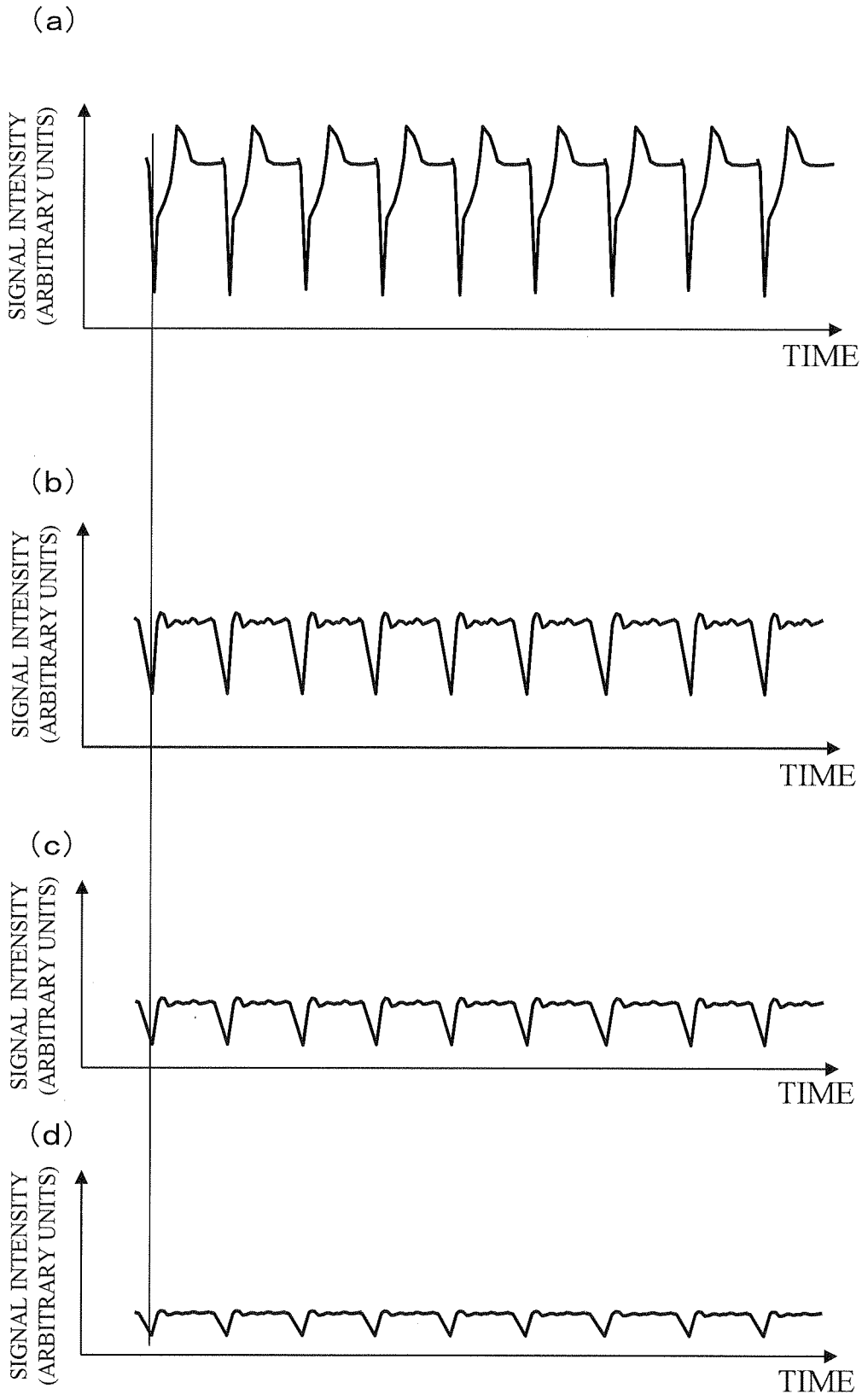
(a)
SIGNAL INTENSITY (ARBITRARY UNITS)
TIME
(b)
SIGNAL INTENSITY (ARBITRARY UNITS)
TIME
(c)
SIGNAL INTENSITY (ARBITRARY UNITS)
TIME
(d)
SIGNAL INTENSITY (ARBITRARY UNITS)
TIME

Fig. 4

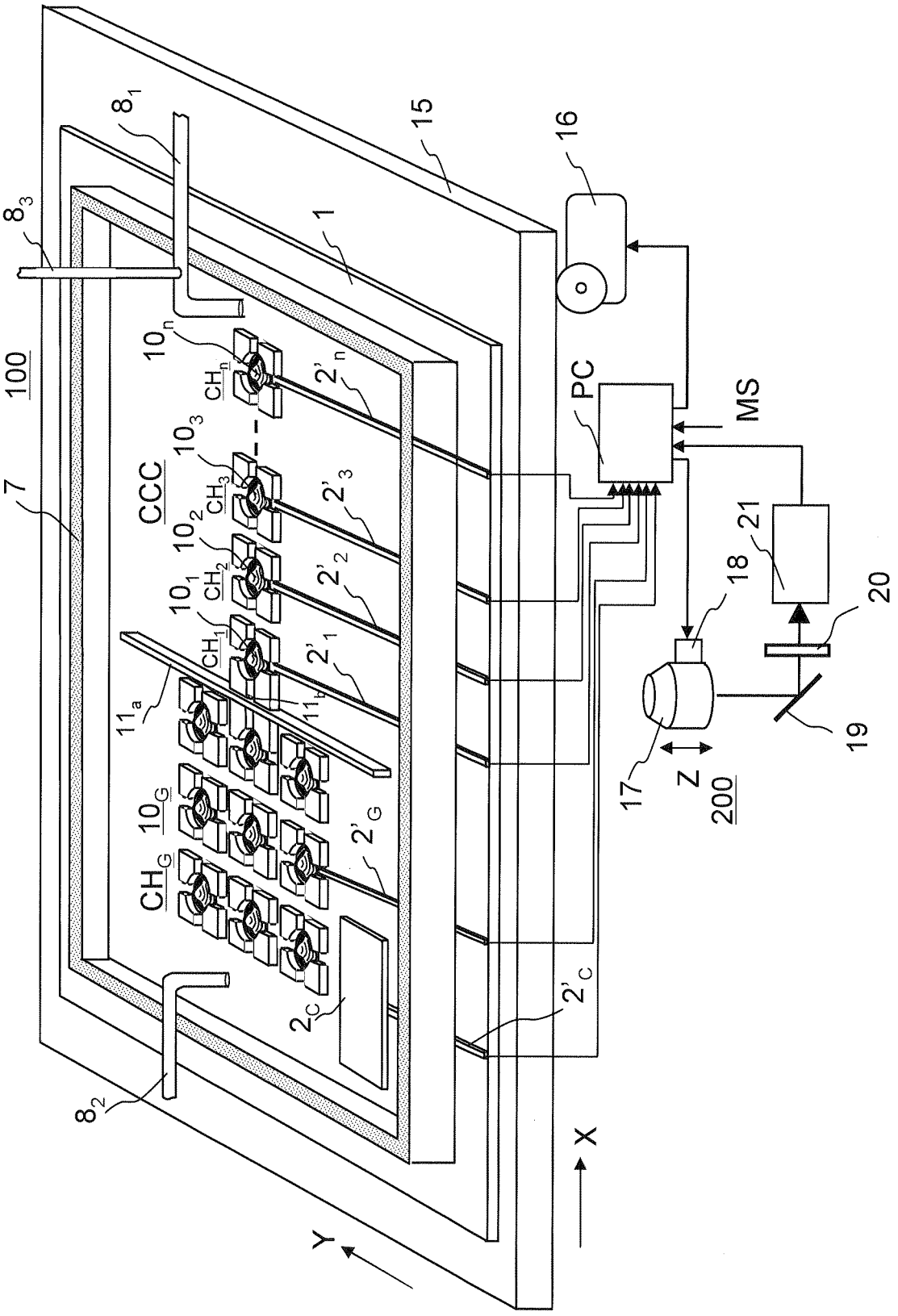

100
7
8₁
8₂
8₃
15
16
1
CCC
10₁
10₂
10₃
10ₙ
CH₁
CH₂
CH₃
CHₙ
2'₁
2'₂
2'₃
2'ₙ
11ₐ
11ₒ
10G
CHG
2'G
2C
2'C
PC
MS
17
18
19
20
21
Z
200
X
Y

Fig. 5

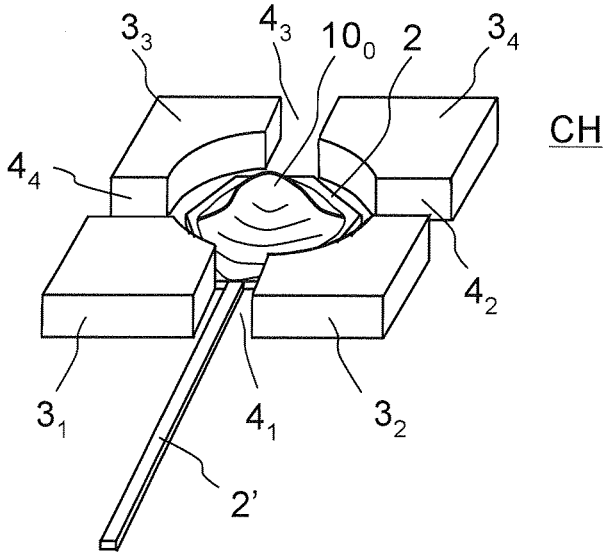
3_3
4_3
10_0
2
3_4
CH
4_4
4_2
3_1
4_1
3_2
2'

Fig. 6

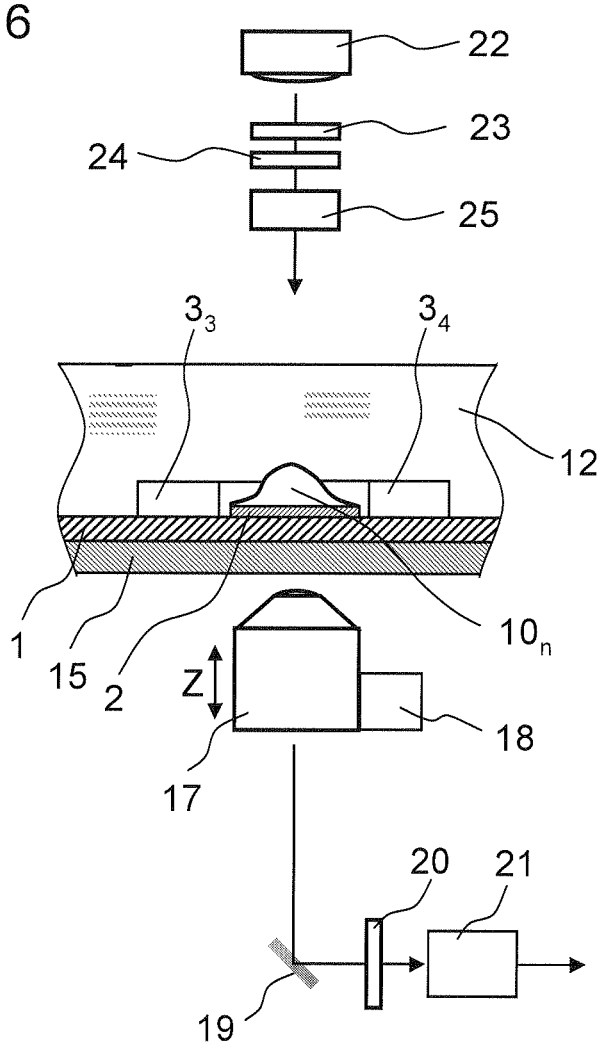
22
23
24
25
3_3
3_4
12
1
15
2
Z
10_n
18
17
20
21
19

Fig. 7

(a) PULSATION OF CELL POPULATION

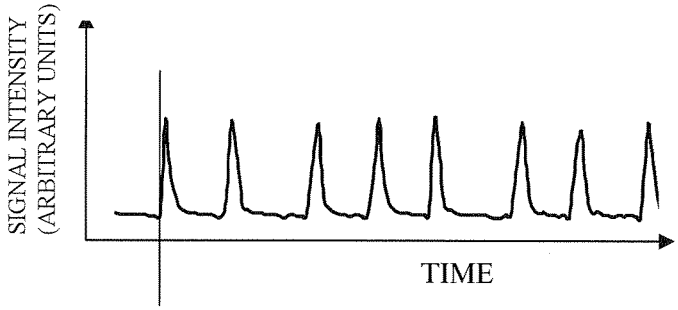

(b) PULSATION OF TARGET CELLS
(NORMAL STATE)

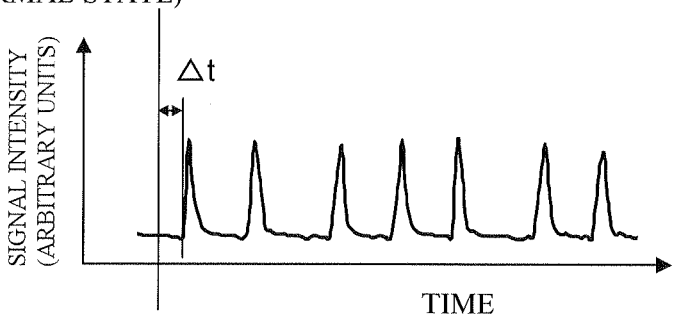

(c) PULSATION OF TARGET CELLS
(NORMAL STATE)

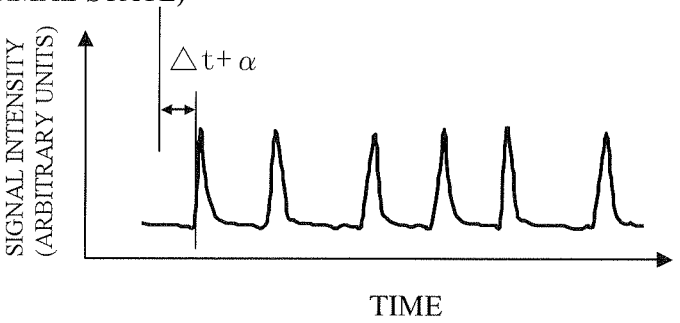

Fig. 8

(a) CHANGE IN VOLUME OF CELLS DUE TO PULSATION OF CELL POPULATION

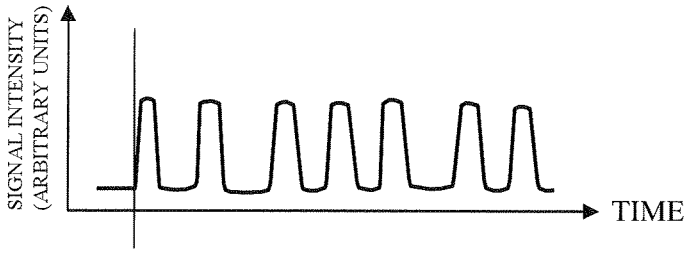

(b) CHANGE IN VOLUME OF CELLS DUE TO PULSATION OF TARGET CELLS (NORMAL)

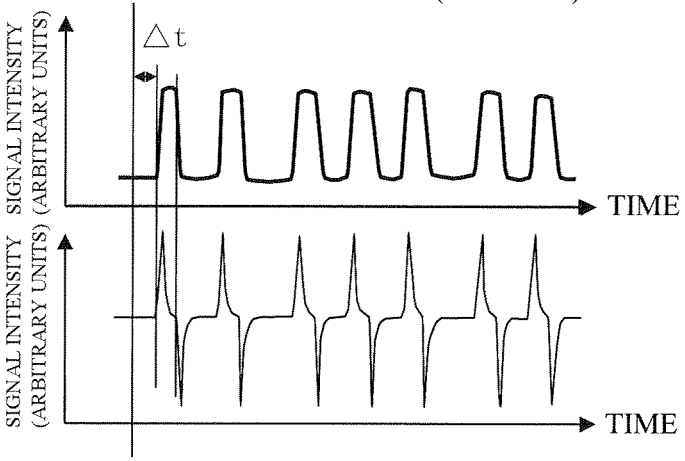

(c) CHANGE IN VOLUME OF CELLS DUE TO PULSATION OF TARGET CELLS (DRUG ACTING)

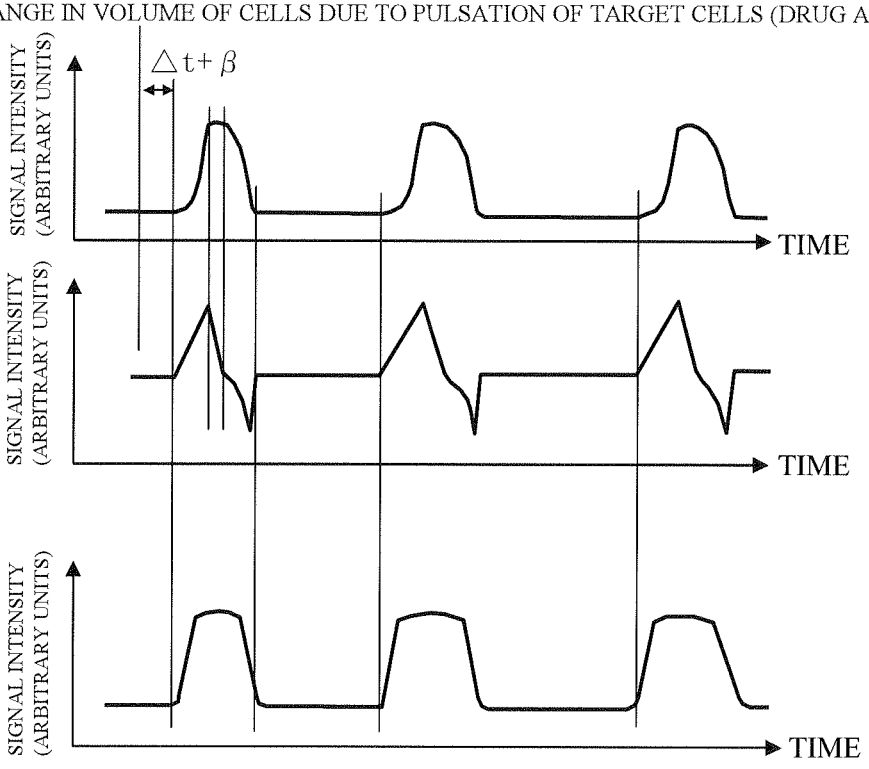

Fig. 9

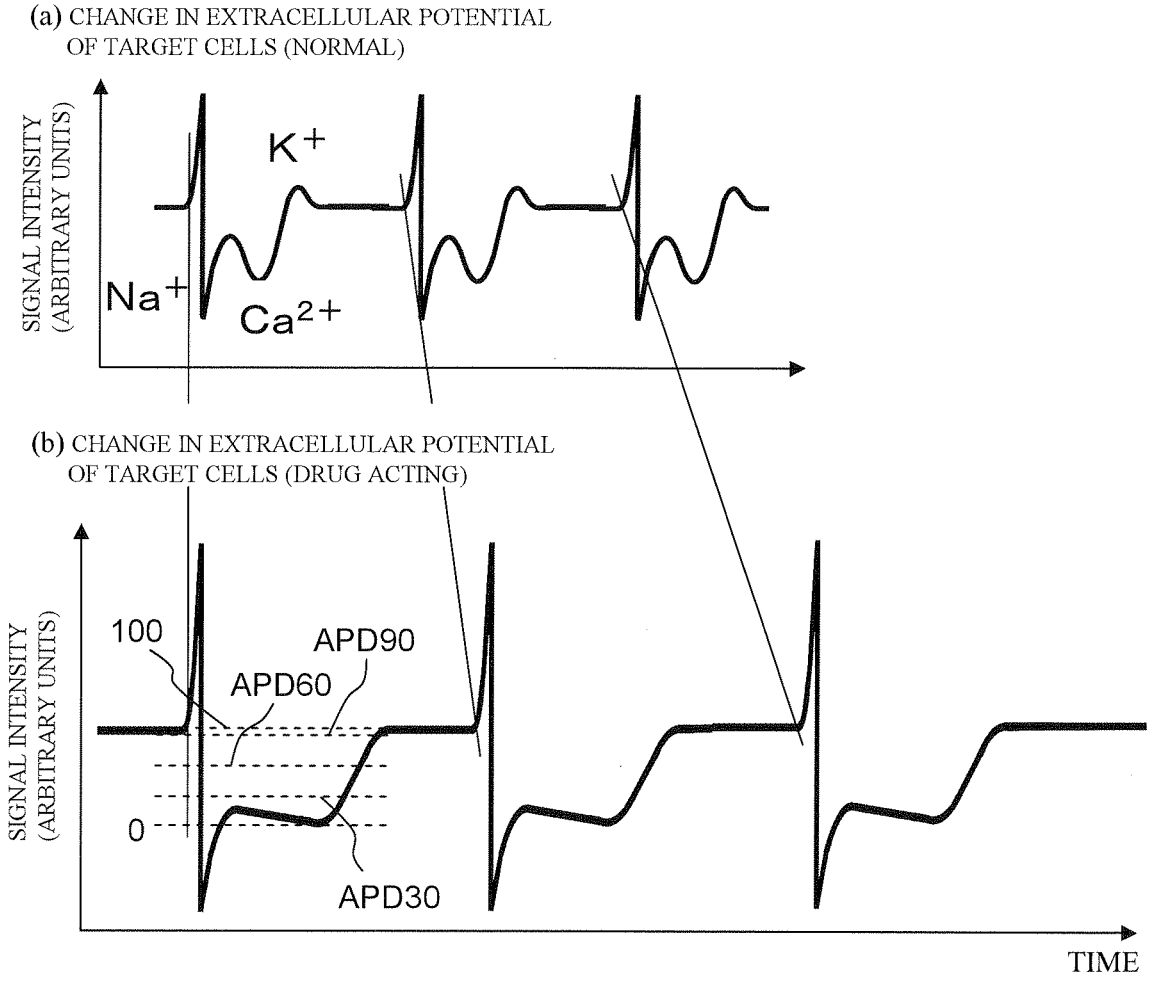
(a) CHANGE IN EXTRACELLULAR POTENTIAL OF TARGET CELLS (NORMAL)
SIGNAL INTENSITY (ARBITRARY UNITS)
K+
Na+
Ca2+
(b) CHANGE IN EXTRACELLULAR POTENTIAL OF TARGET CELLS (DRUG ACTING)
SIGNAL INTENSITY (ARBITRARY UNITS)
100
APD90
APD60
0
APD30
TIME