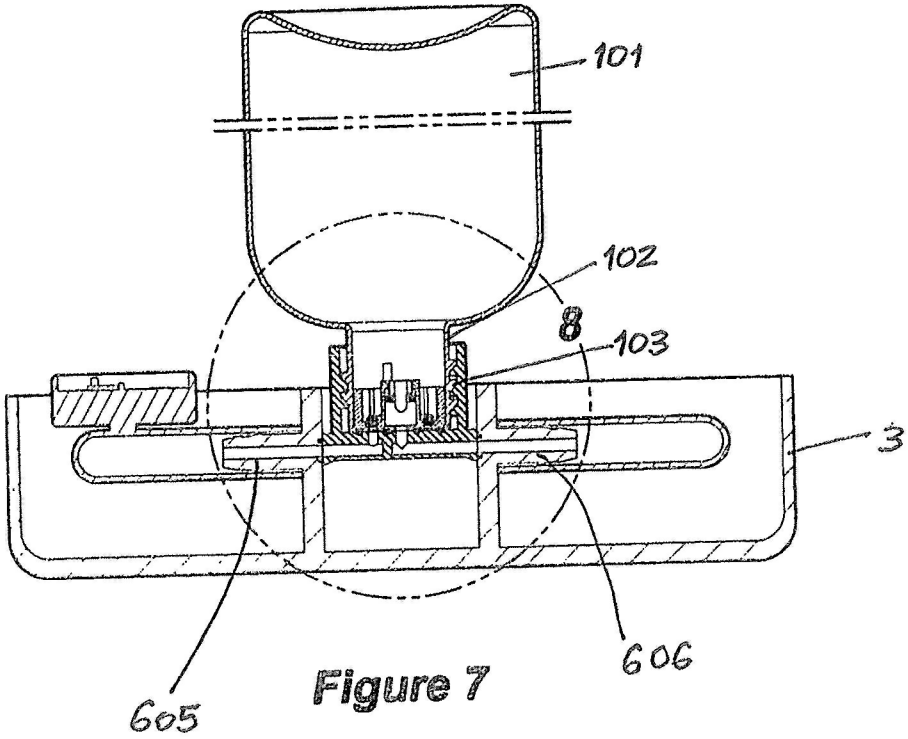

Figure 7

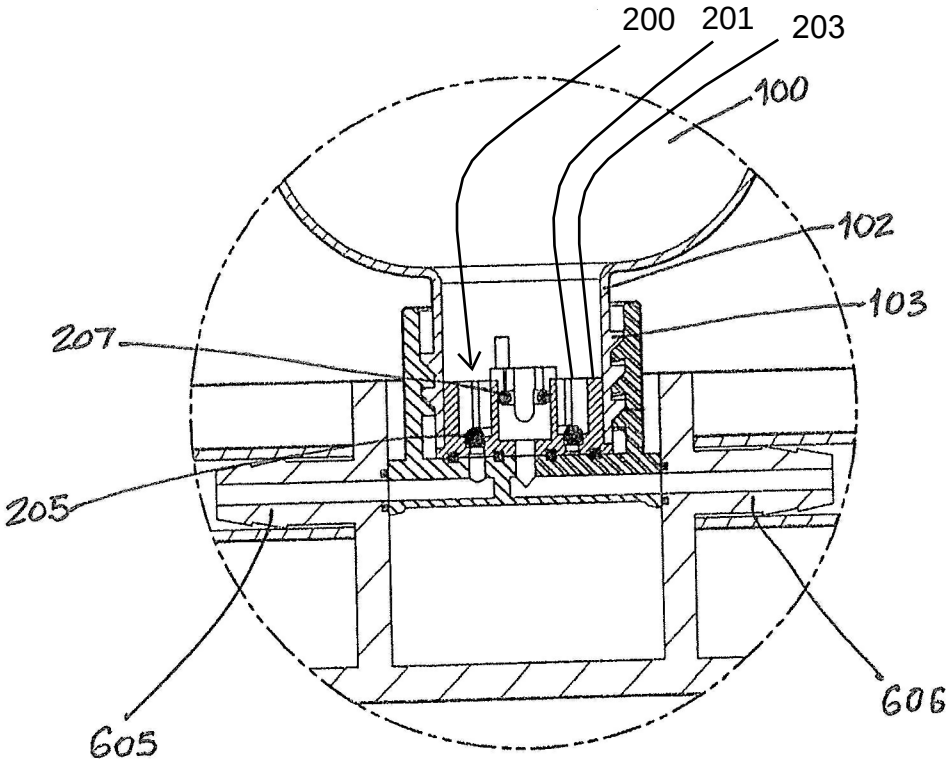

Figure 8

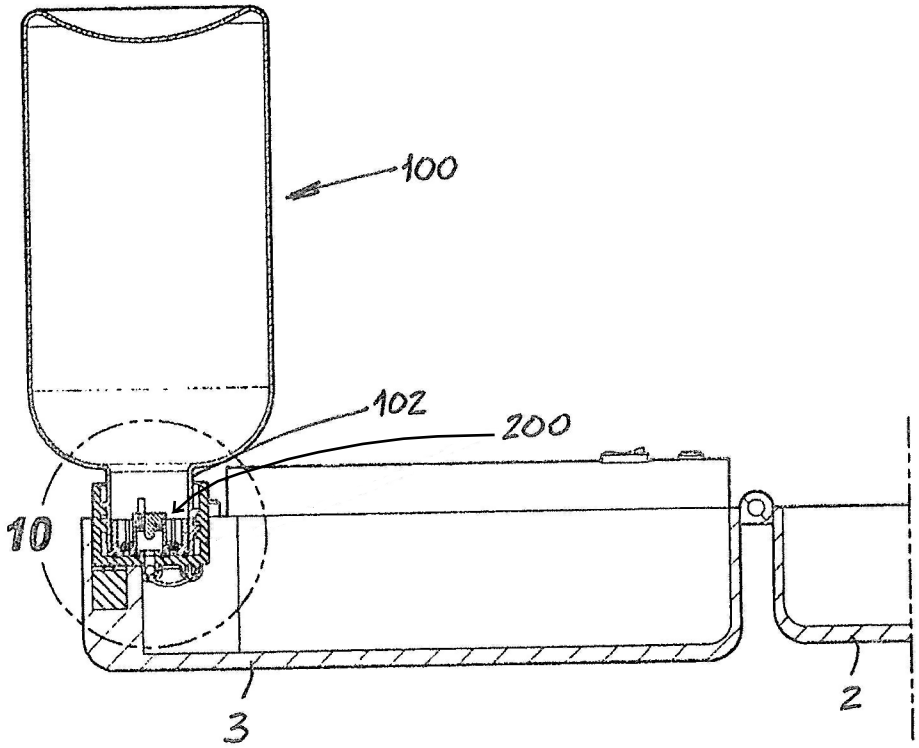

Figure 9

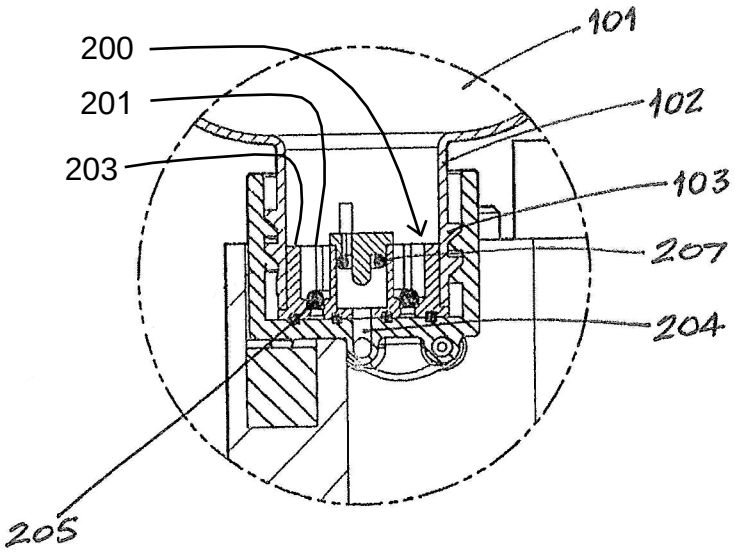

Figure 10

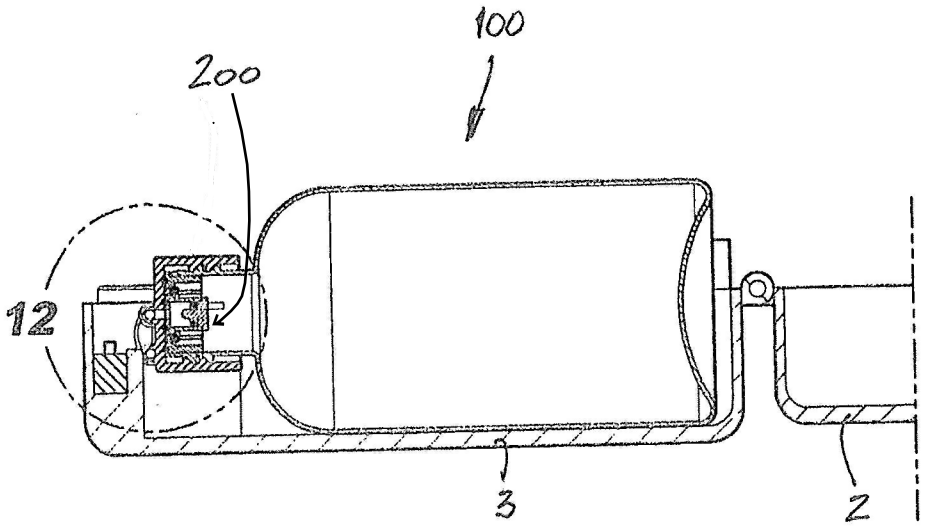

Figure 11

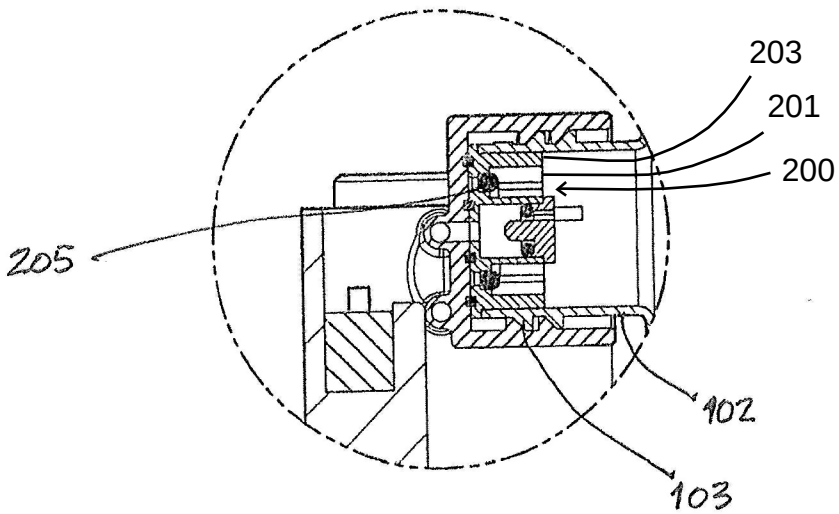

Figure 12