Multi-layer Stackable Worm Bin with Temperature and Humidity Monitoring

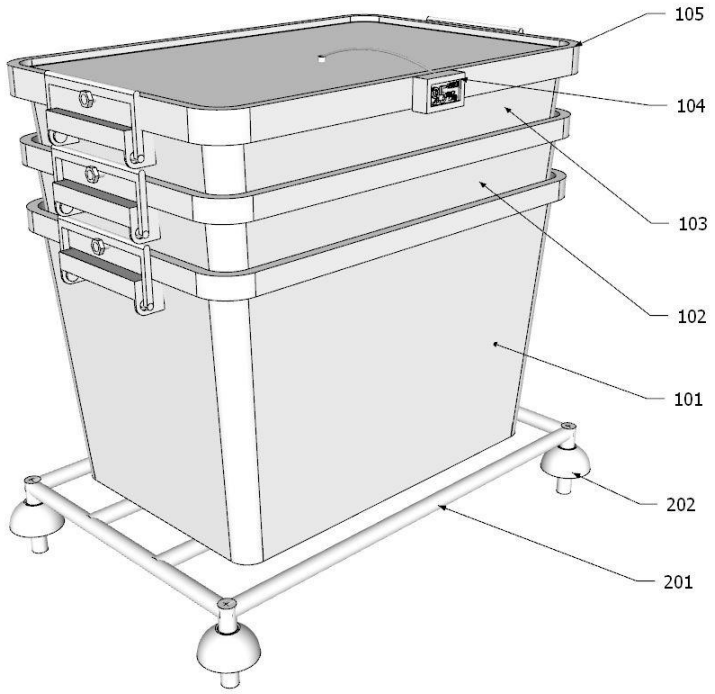

Figure 1

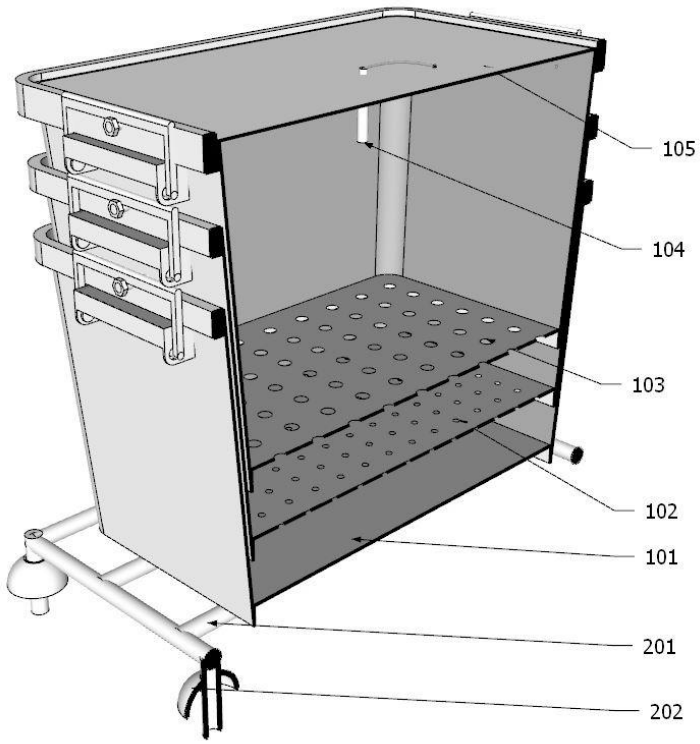

Figure 2

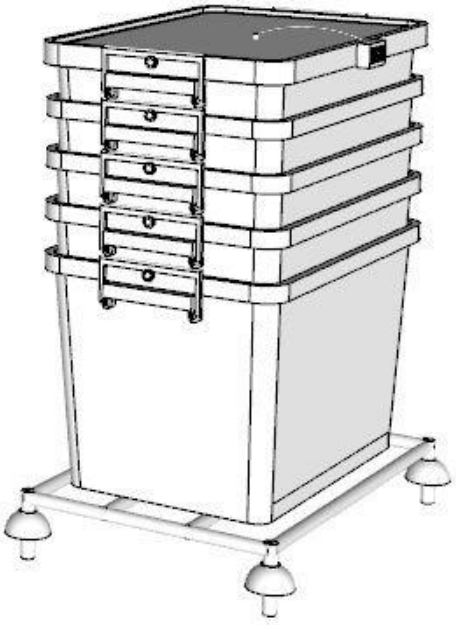

Figure 3

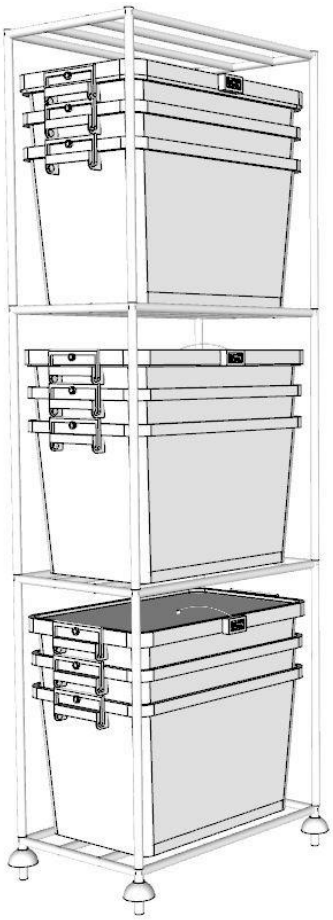

Figure 4