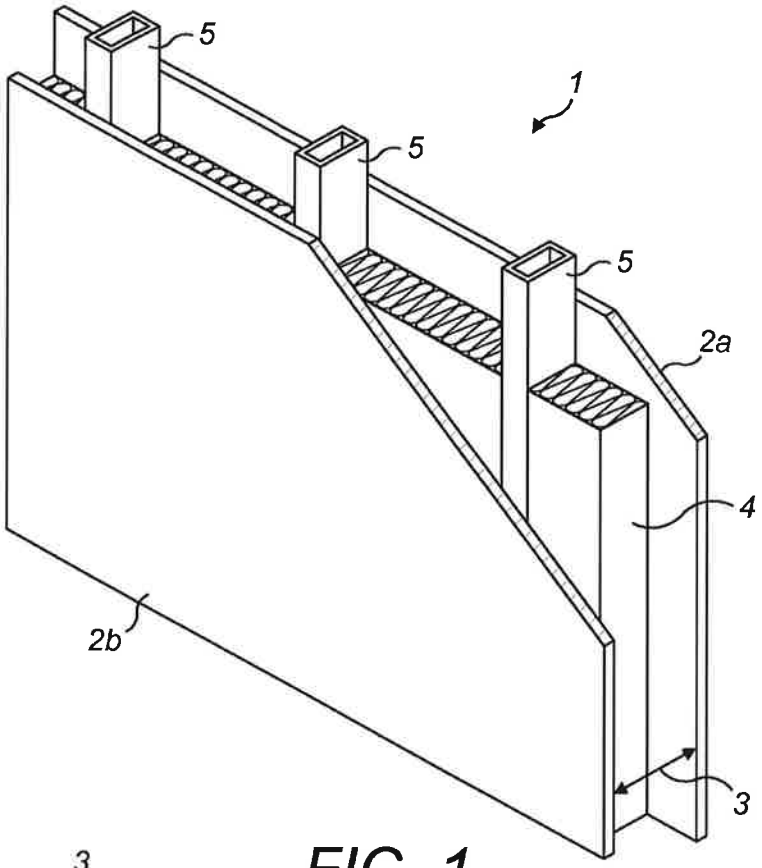

FIG. 1

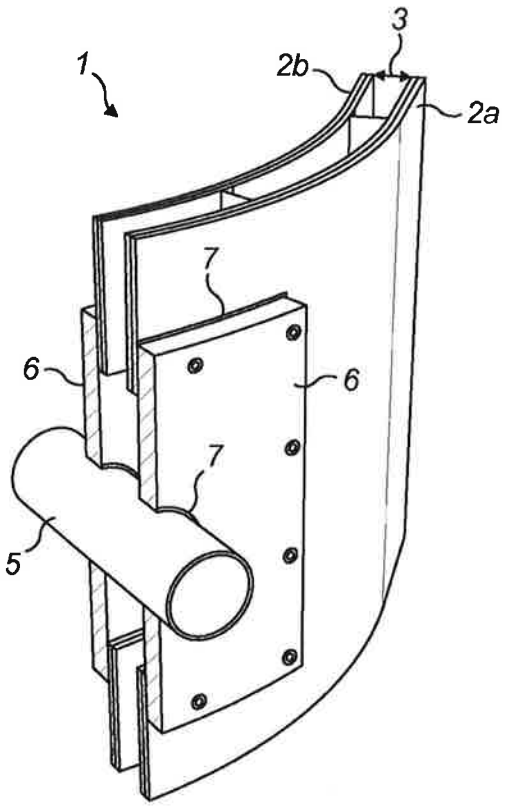

FIG. 2
Prior Art

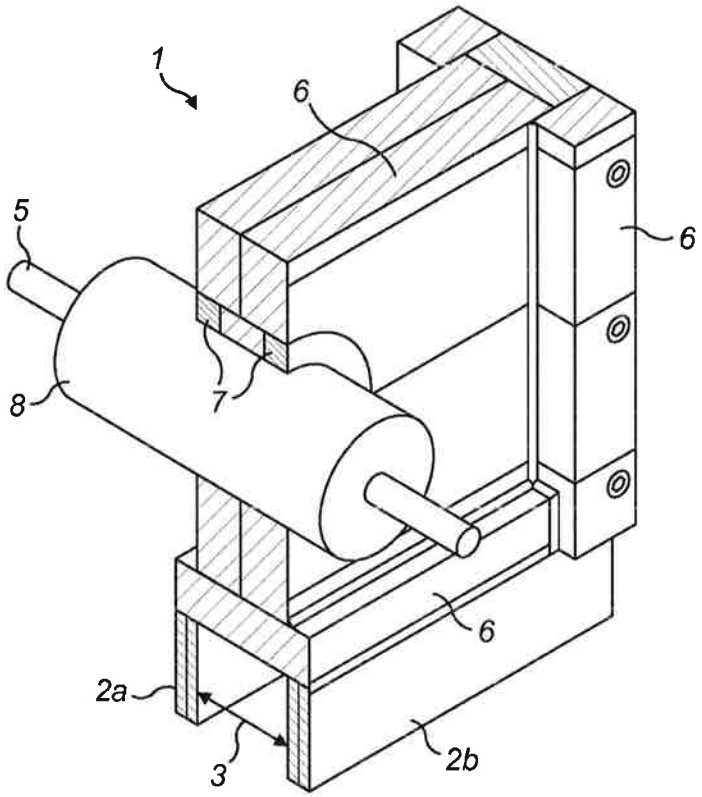

FIG. 3
Prior Art

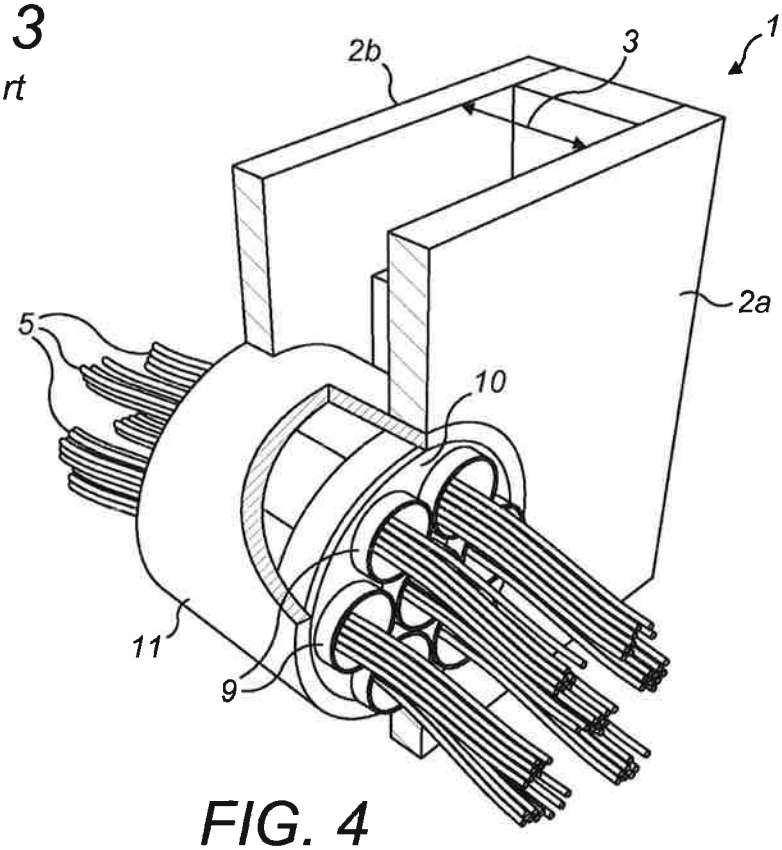

FIG. 4
Prior Art

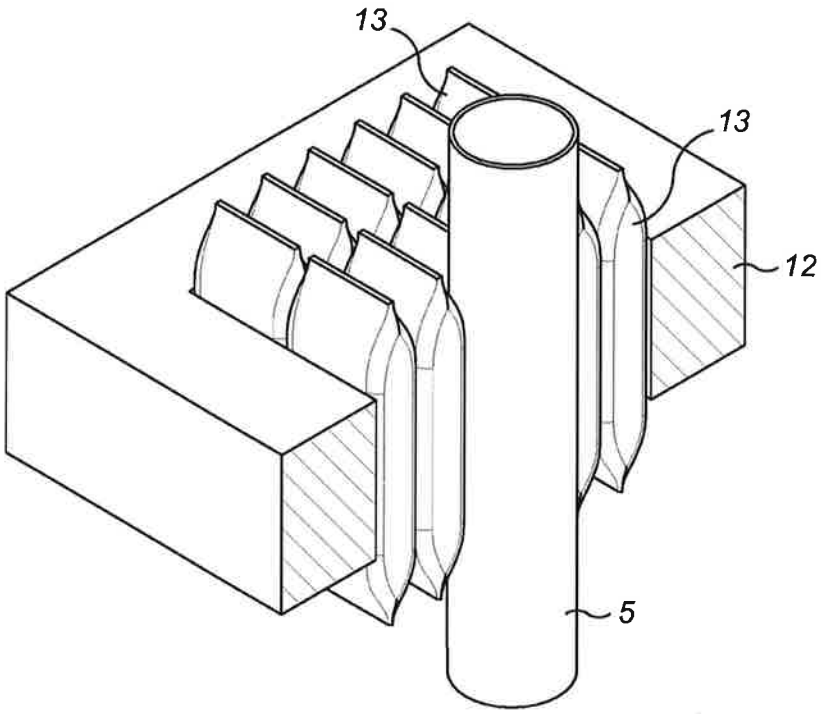

FIG. 5
Prior Art

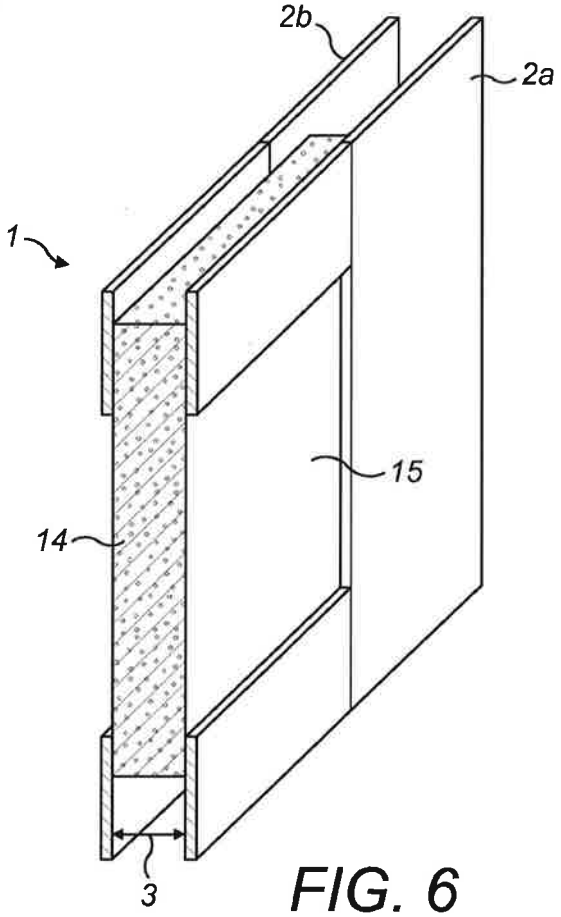

FIG. 6

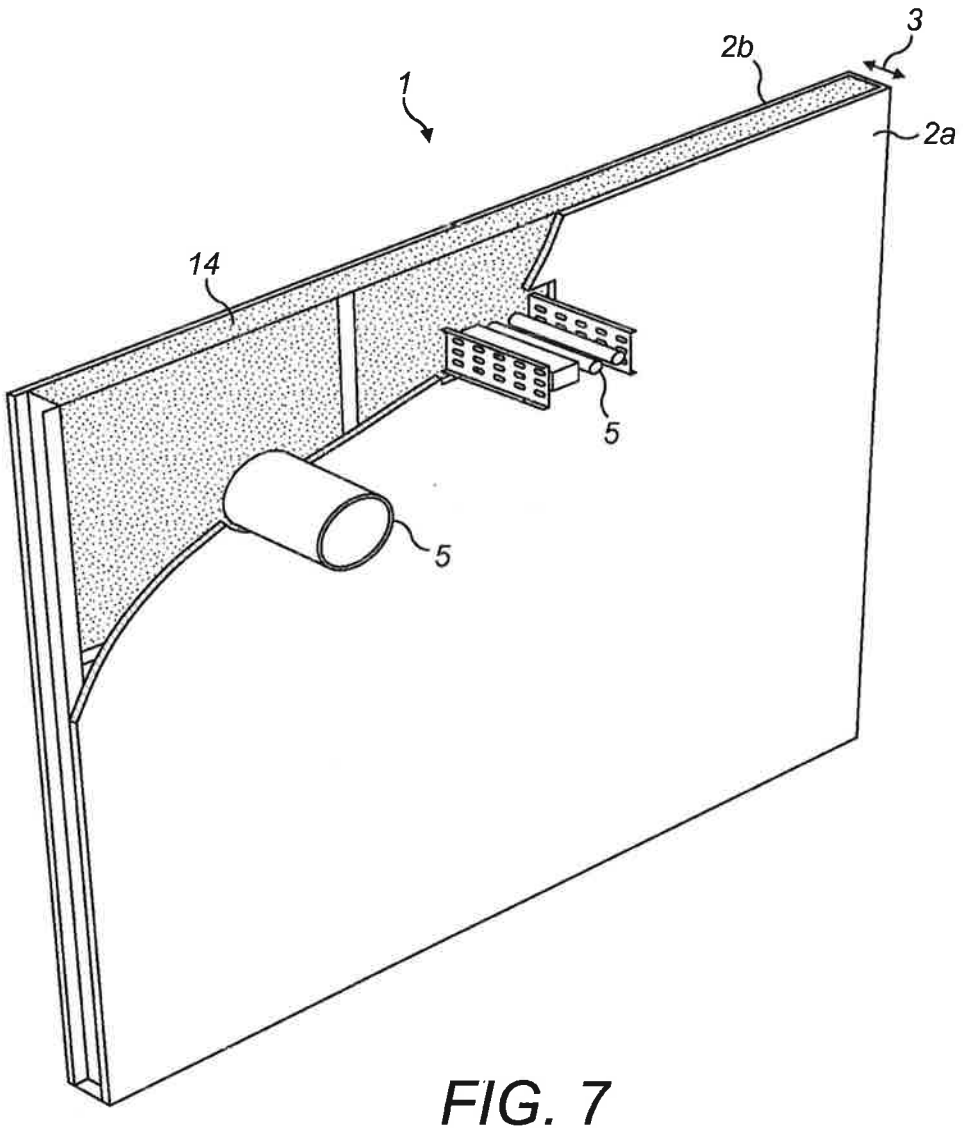

FIG. 7