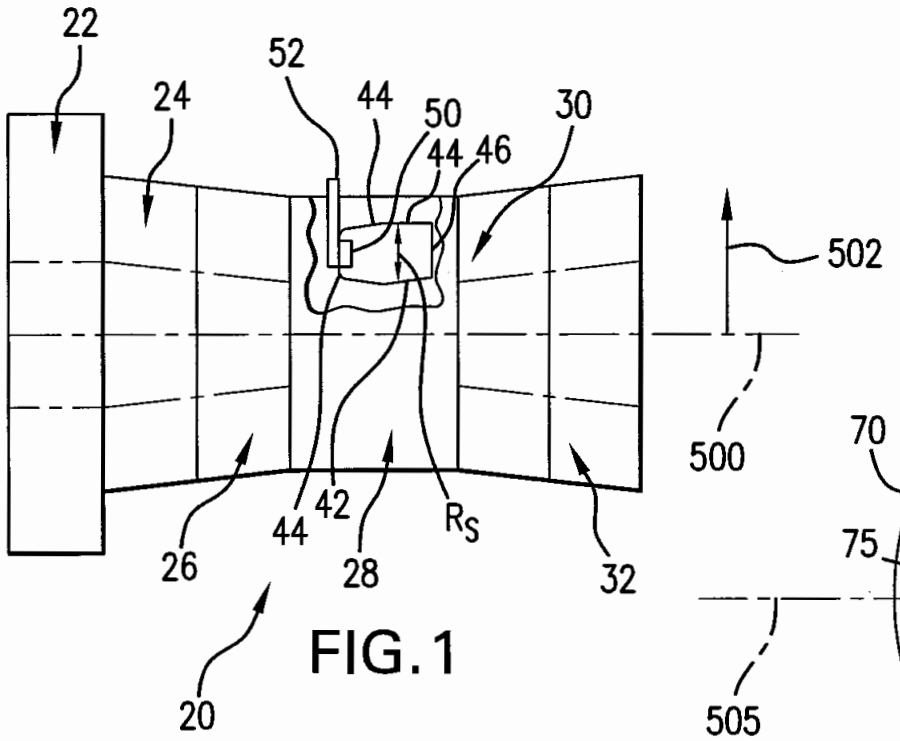

FIG. 1

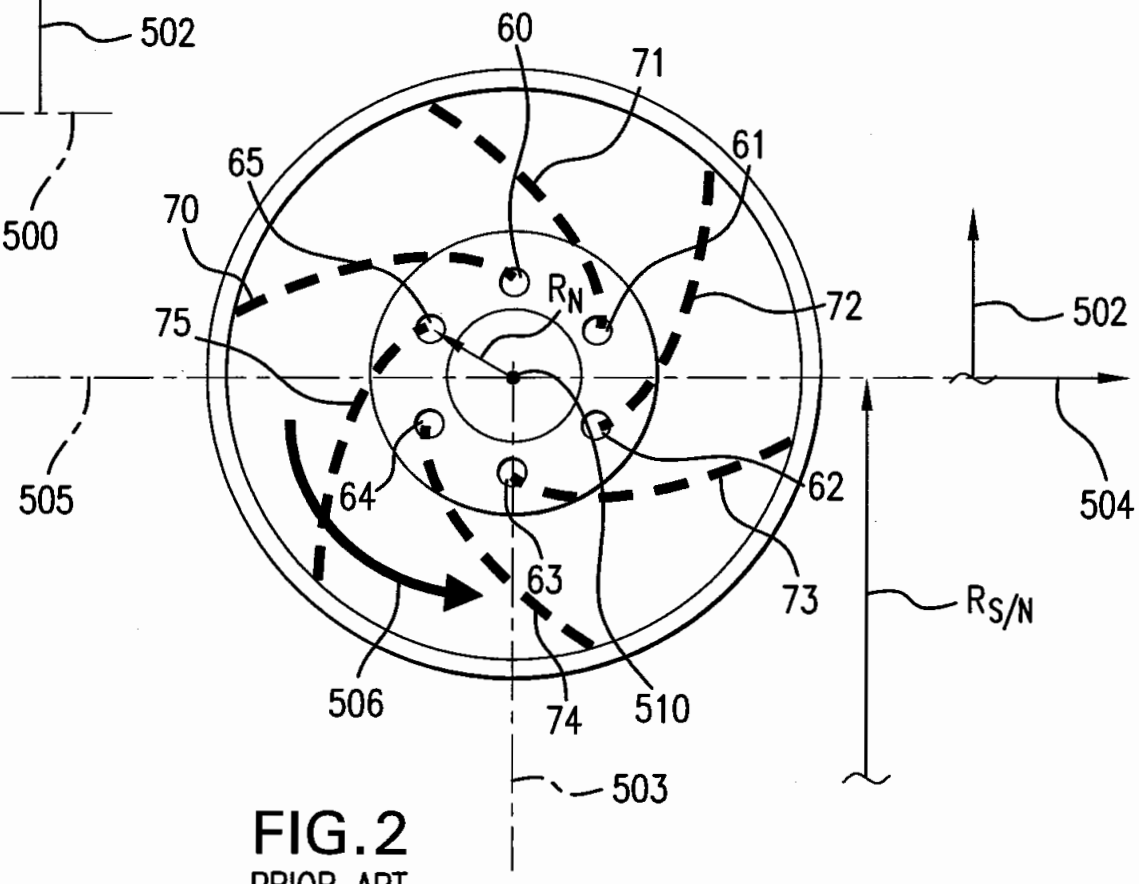

FIG. 2
PRIOR ART

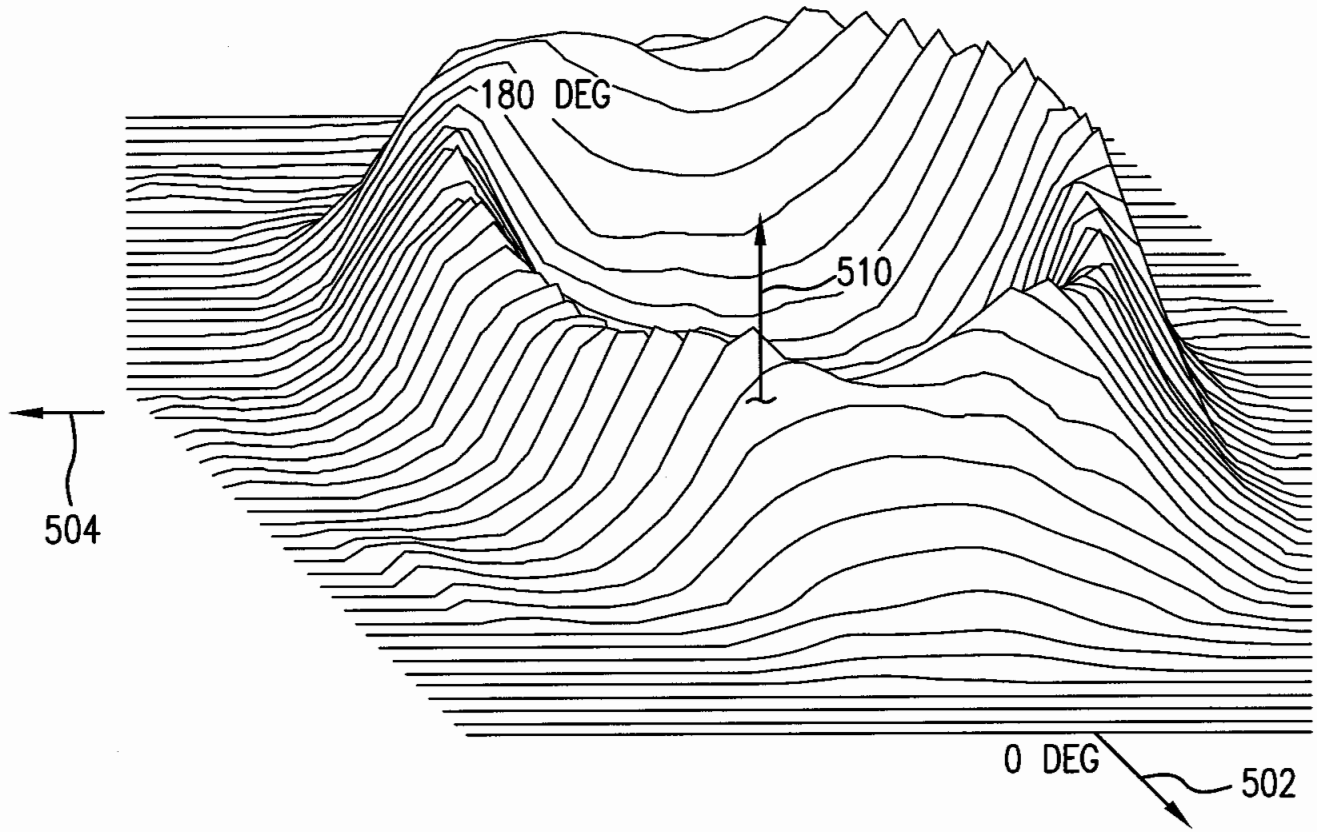

FIG.3

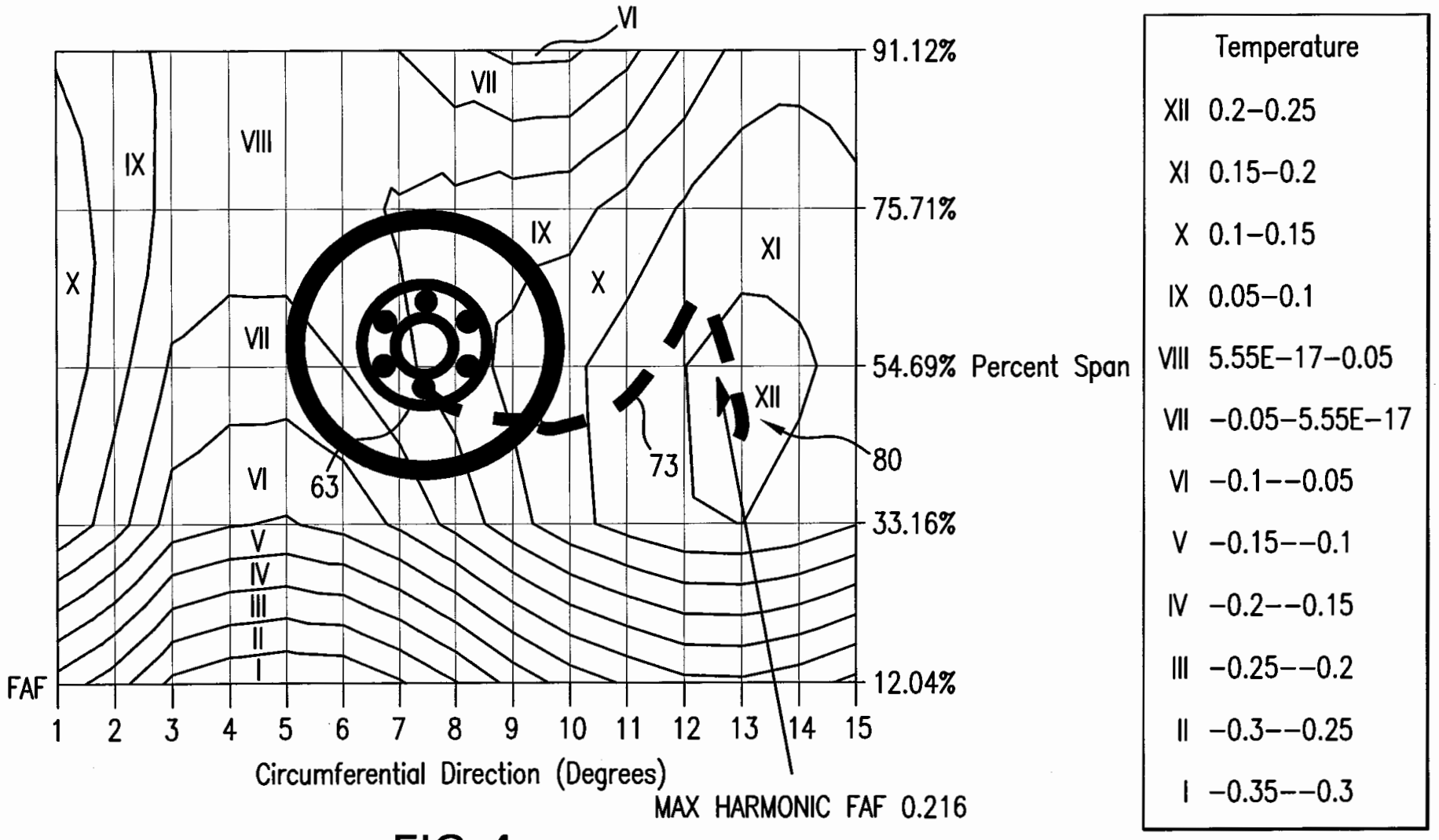
VI
VII
VIII
IX
X
XI
XII
91.12%
75.71%
54.69%
33.16%
12.04%
Percent Span
63
73
80
FAF
1 2 3 4 5 6 7 8 9 10 11 12 13 14 15
Circumferential Direction (Degrees)
MAX HARMONIC FAF 0.216
Temperature
XII 0.2–0.25
XI 0.15–0.2
X 0.1–0.15
IX 0.05–0.1
VIII 5.55E–17–0.05
VII –0.05–5.55E–17
VI –0.1–-0.05
V –0.15–-0.1
IV –0.2–-0.15
III –0.25–-0.2
II –0.3–-0.25
I –0.35–-0.3

FIG.4

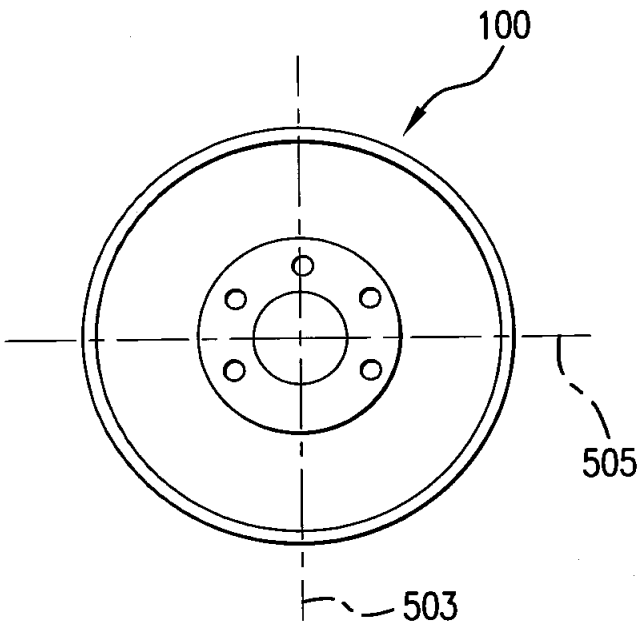

FIG.5

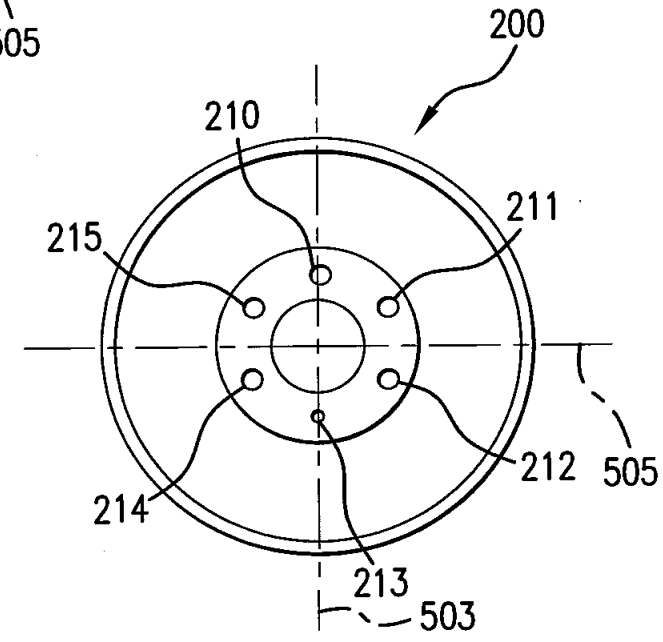

FIG.7

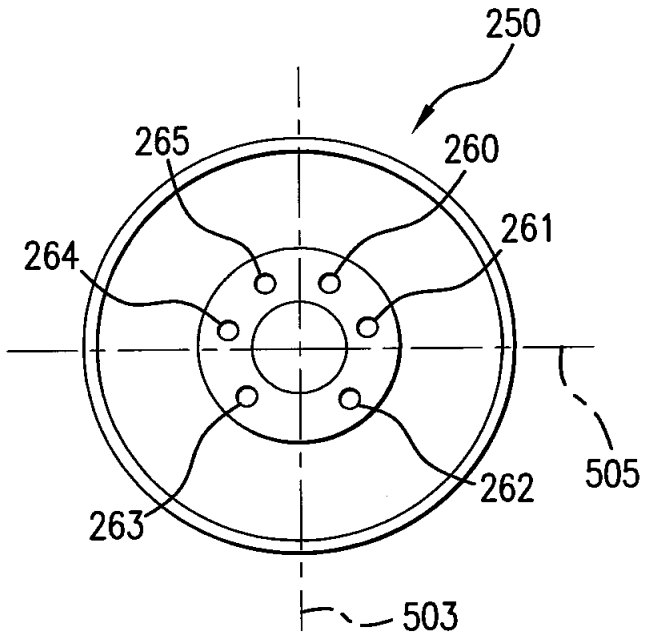

FIG.8

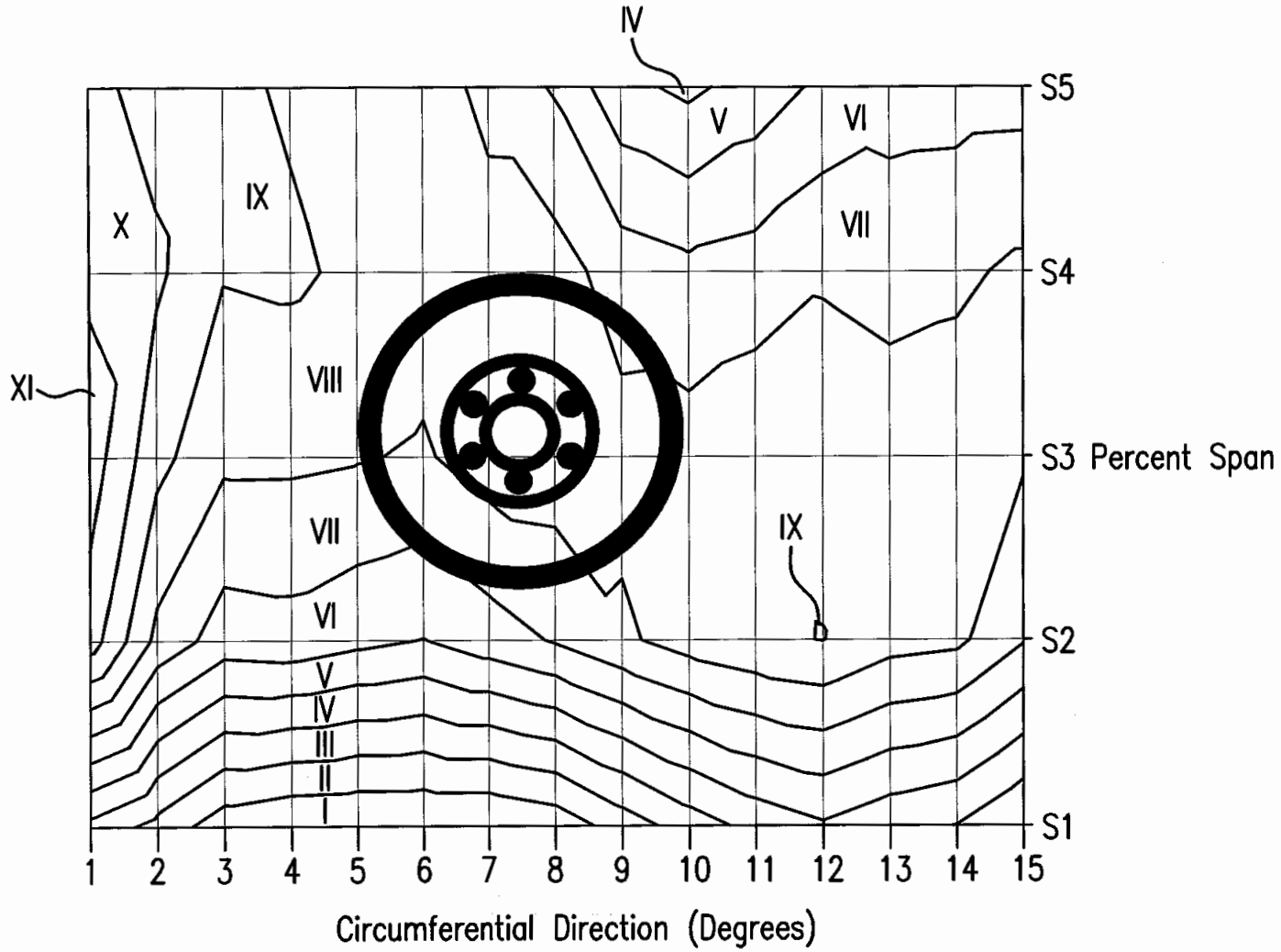

Temperature	
XIV	0.0675–0.07
XIII	0.065–0.0675
XII	0.0625–0.065
XI	0.06–0.0625
X	0.0575–0.06
IX	0.055–0.0575
VIII	0.0525–0.055
VII	0.05–0.0525
VI	0.0475–0.05
V	0.045–0.0475
IV	0.0425–0.045
III	0.04–0.0425
II	0.0375–0.04
I	0.035–0.0375

FIG.6

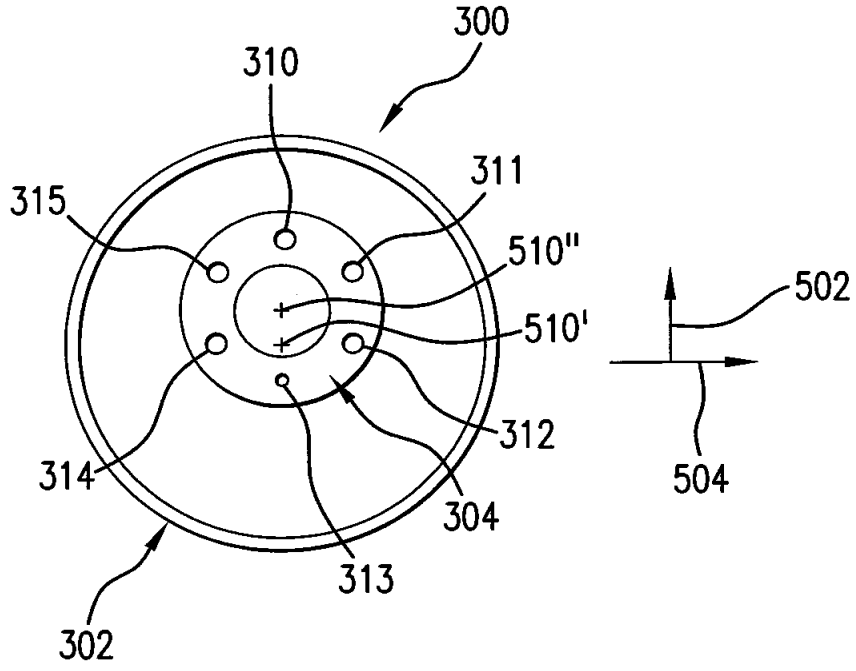

FIG.9