Fig.1

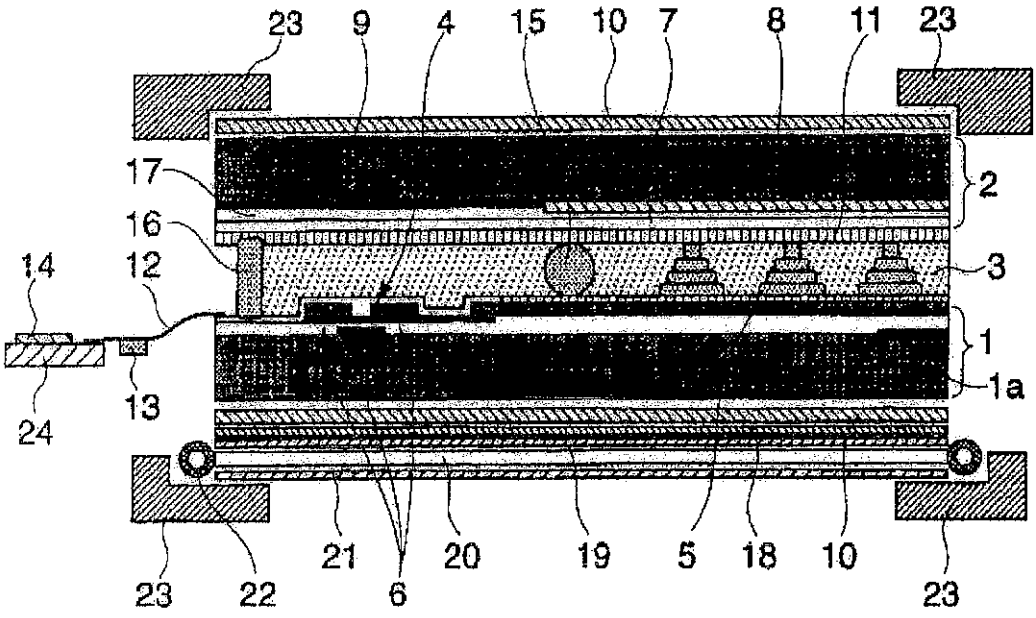

Fig.2

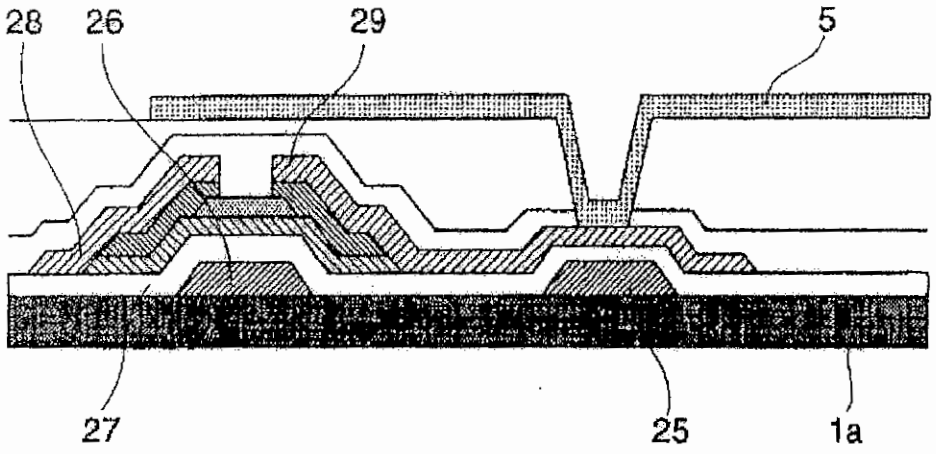

Fig.3

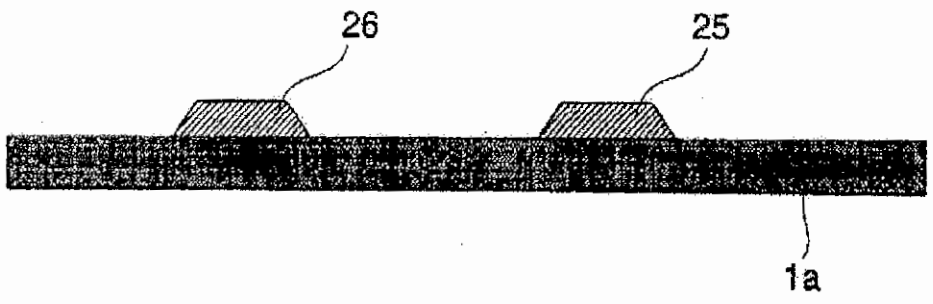

Fig.4

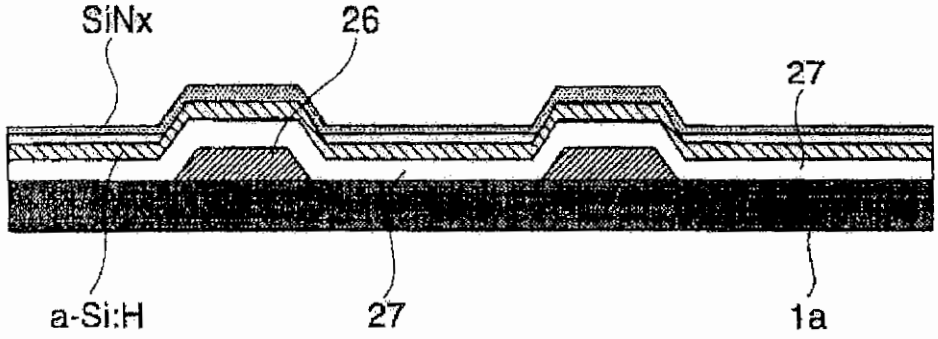

Fig.5

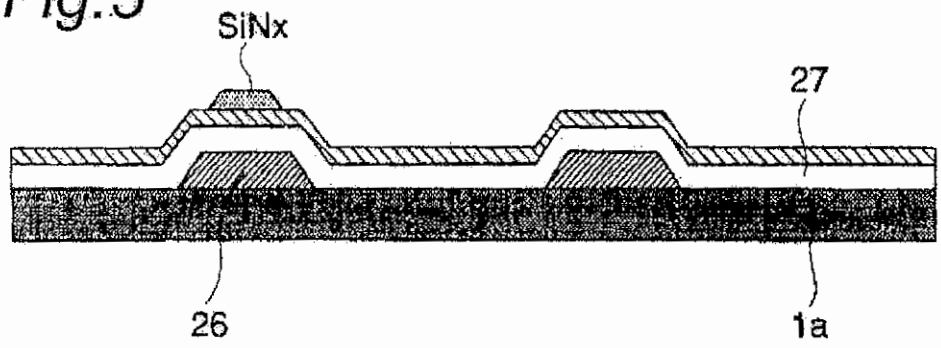

Fig.6

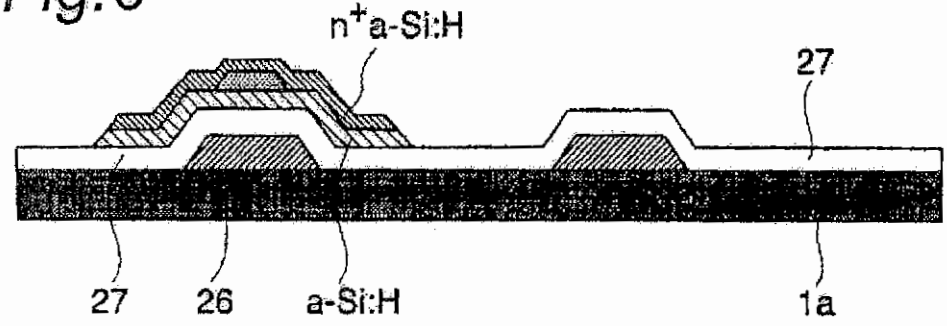

Fig.7

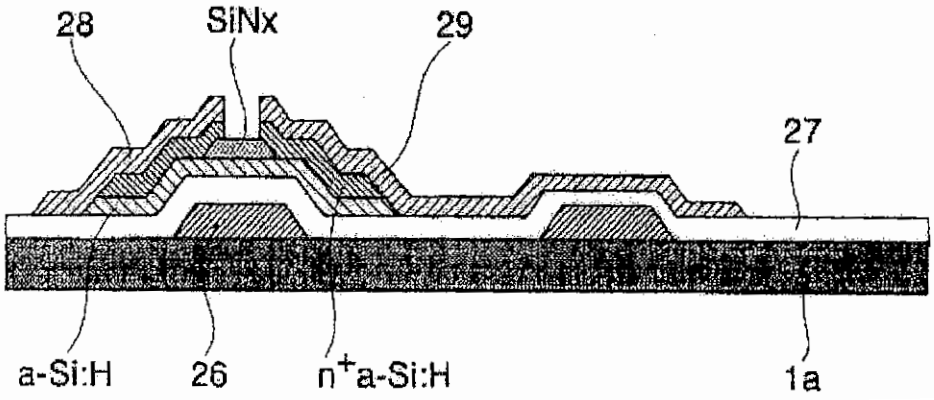

Fig.8

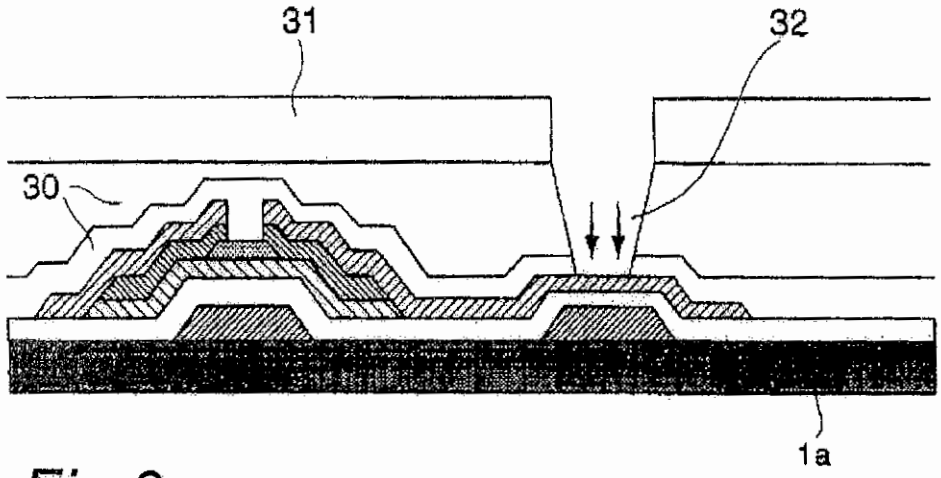

Fig.9

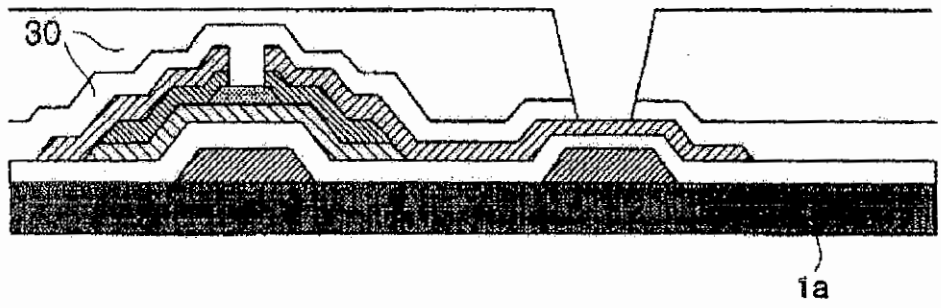

Fig.10

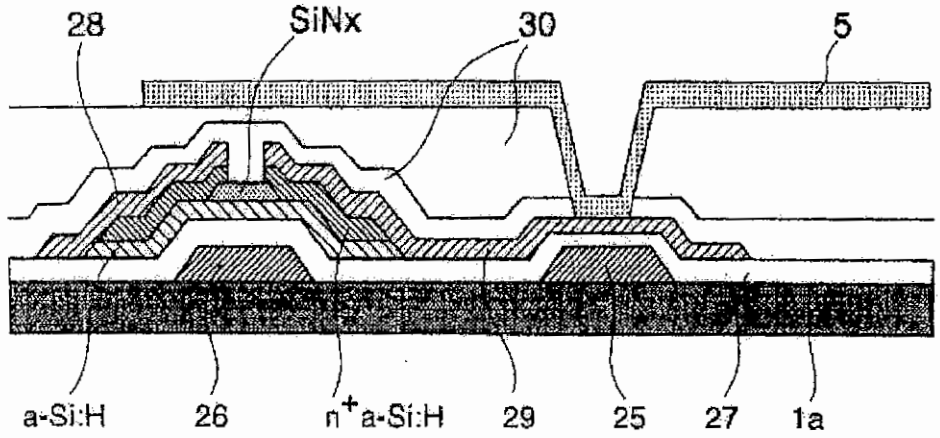

Fig.11

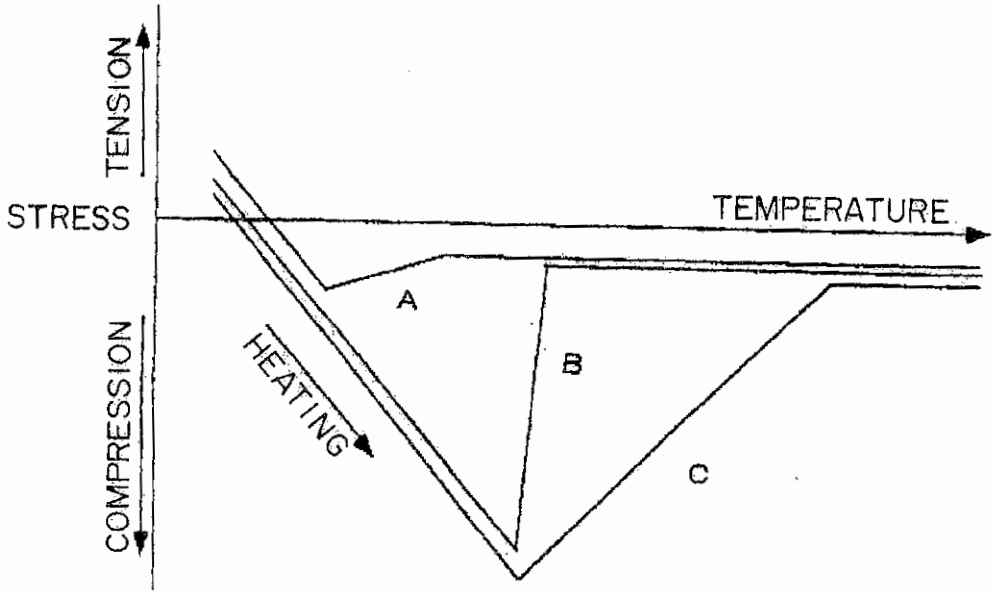

Fig.12

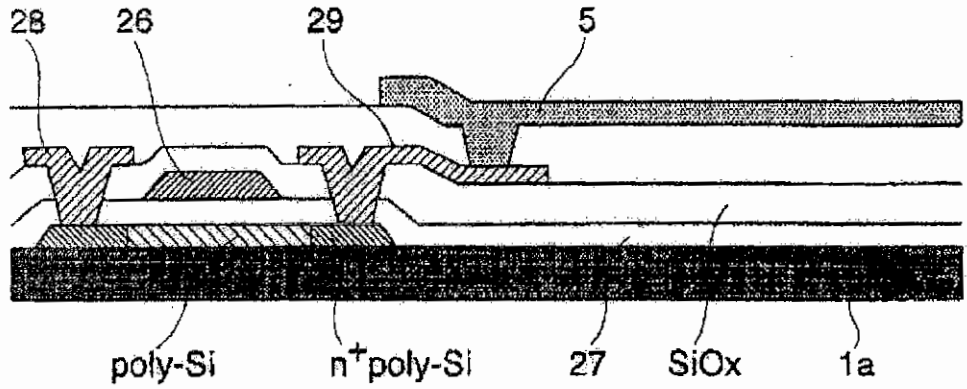

Fig.13

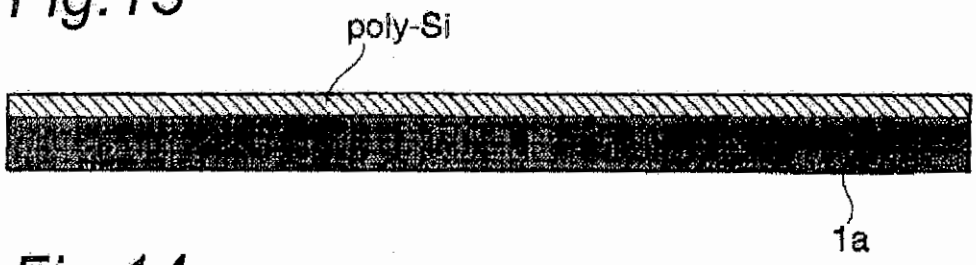

Fig.14



Fig.15

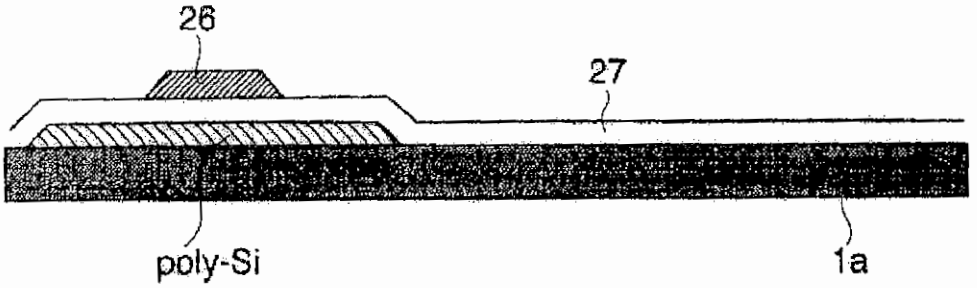

Fig.16

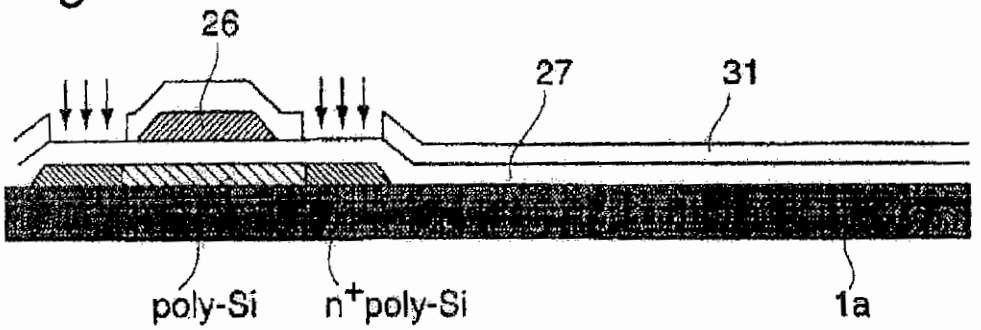

Fig.17

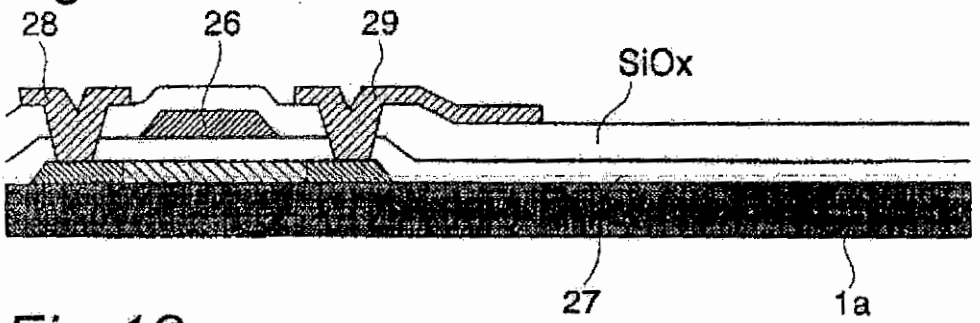

Fig.18

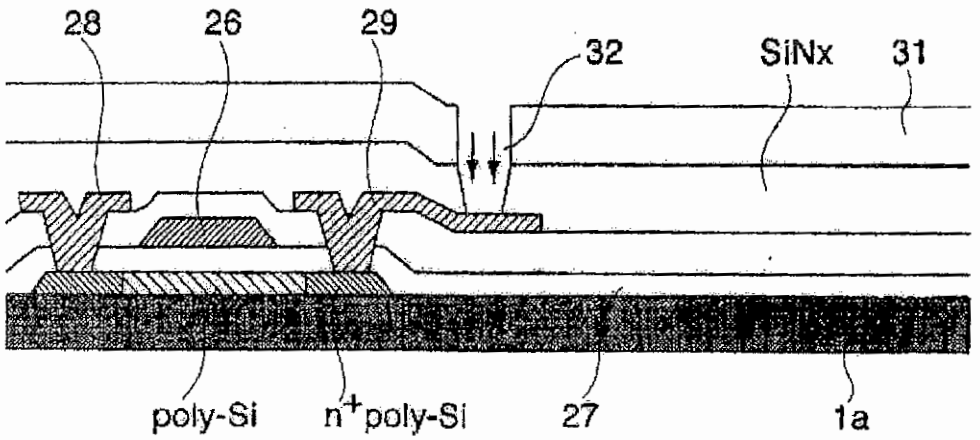

Fig.19

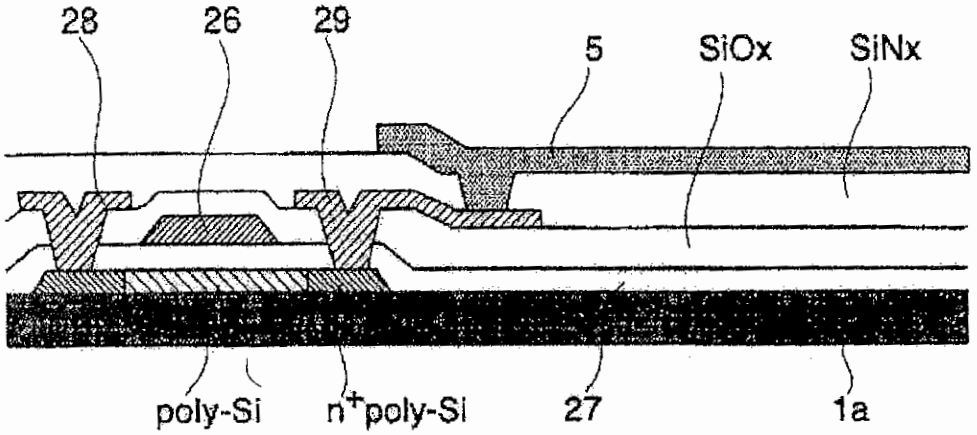
28
26
29
5
SiOx
SiNx
poly-Si
n+poly-Si
27
1a

Fig.20

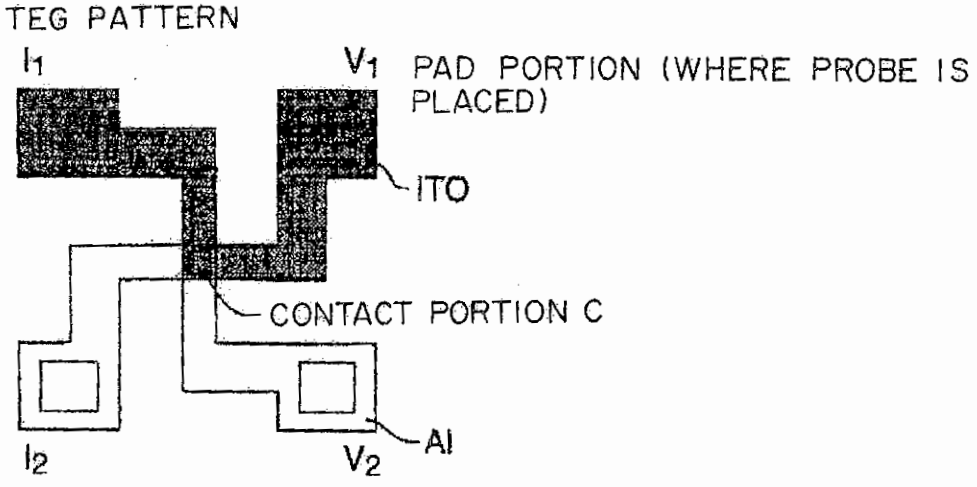
TEG PATTERN
I1
V1
PAD PORTION (WHERE PROBE IS PLACED)
ITO
CONTACT PORTION C
Al
I2
V2