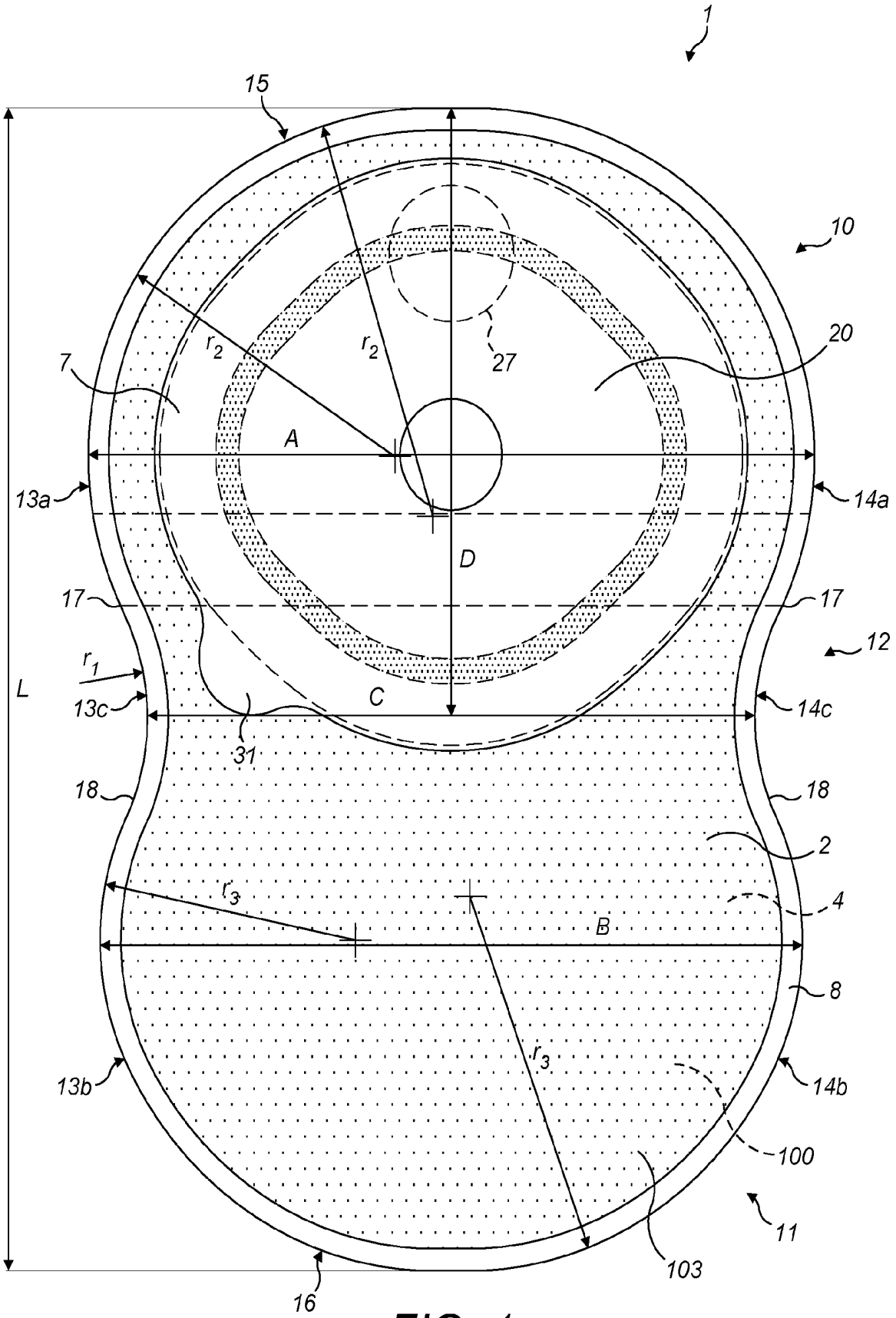
1
15
10
20
7
$r_2$
$r_2$
27
A
13a
14a
D
17
17
12
$r_1$
L
C
13c
14c
31
18
18
2
$r_3$
4
B
8
$r_3$
13b
14b
100
11
103
16

FIG. 1

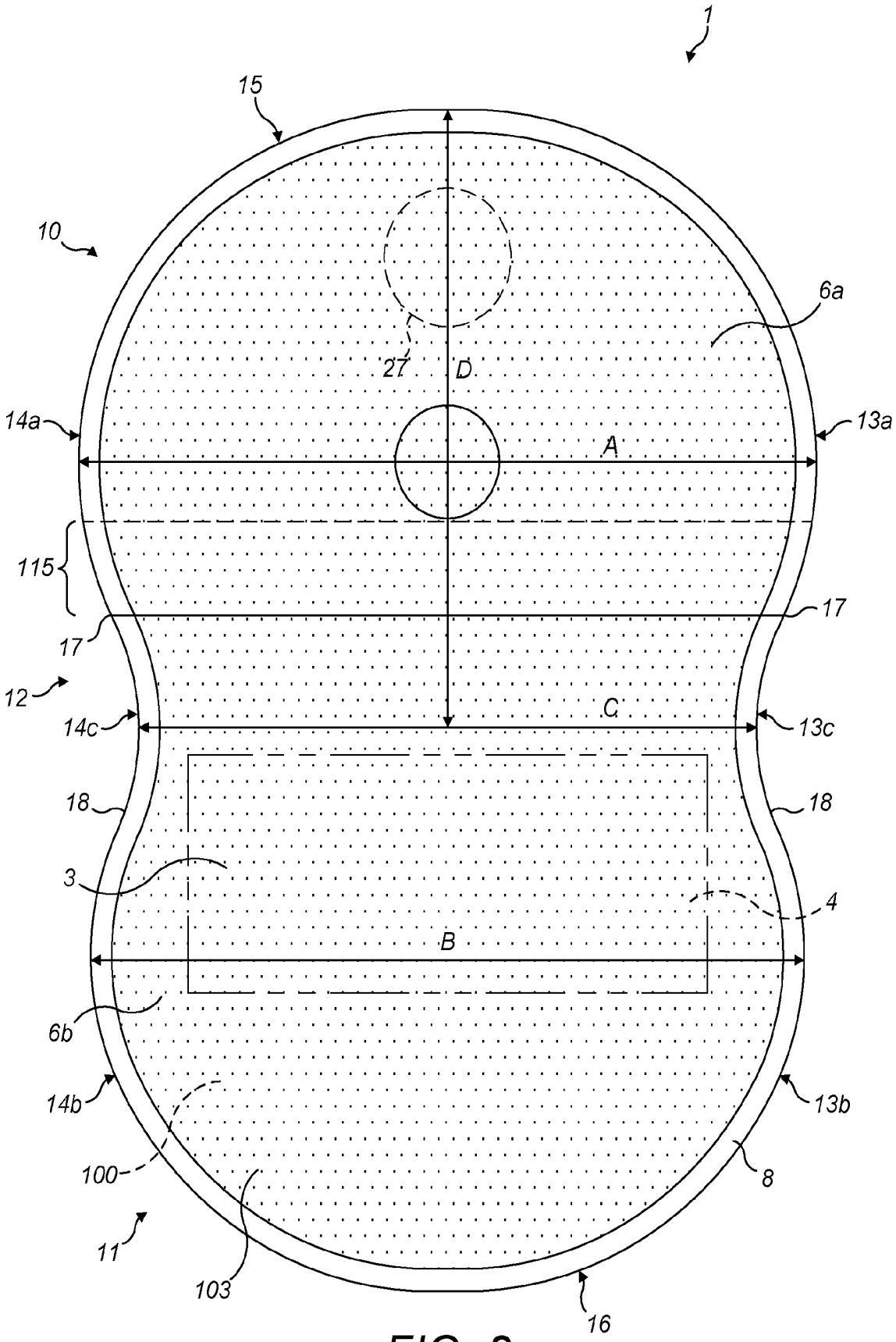
1
15
10
6a
27
D
14a
13a
A
115
17
17
12
C
14c
13c
18
18
3
4
B
6b
14b
13b
100
8
11
103
16

FIG. 2

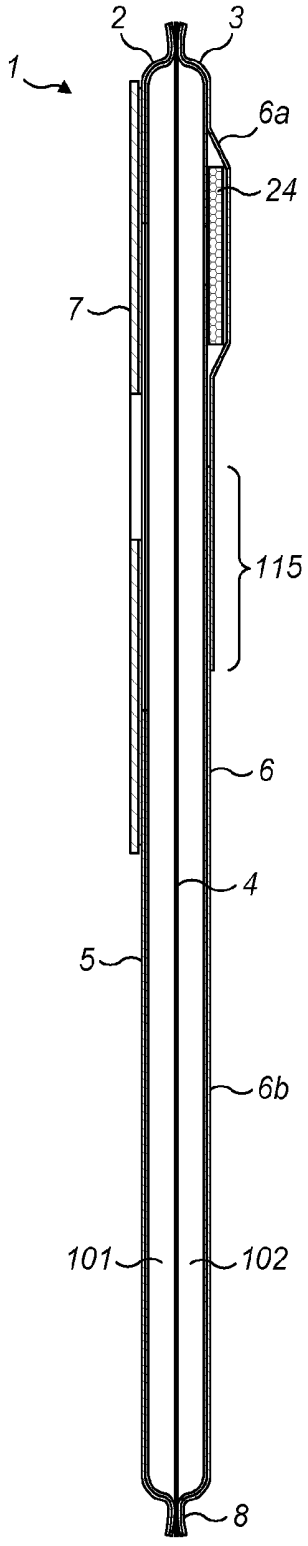


FIG. 3

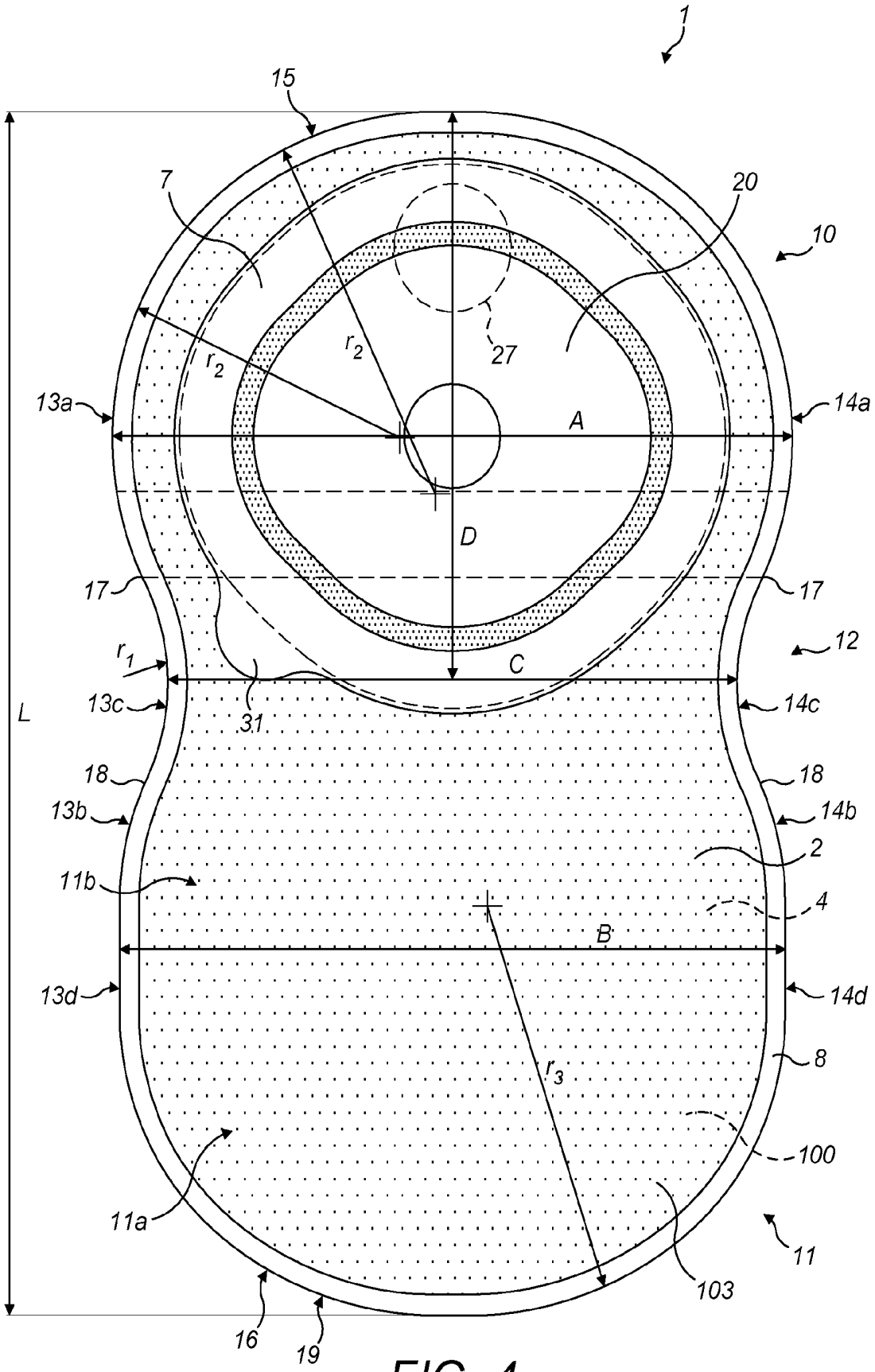
1
15
7
20
10
$r_2$
$r_2$
27
13a
14a
A
D
17
17
$r_1$
12
C
L
13c
14c
31
18
18
13b
14b
2
11b
4
B
13d
14d
8
$r_3$
100
11a
11
103
16
19

FIG. 4

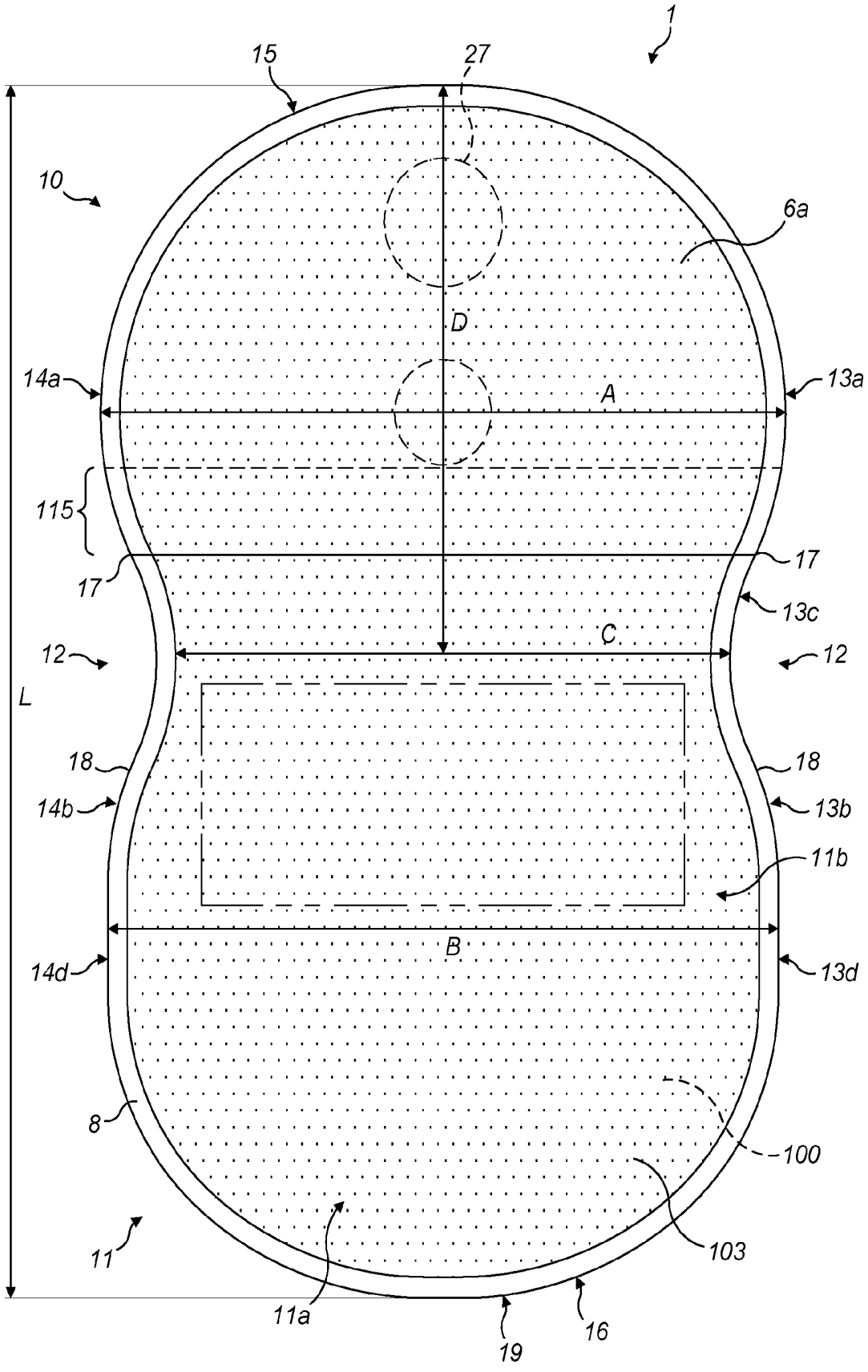
1
15
27
10
6a
D
14a
A
13a
115
17
17
13c
C
12
12
L
18
18
14b
13b
11b
B
14d
13d
8
100
103
11
11a
19
16

FIG. 5

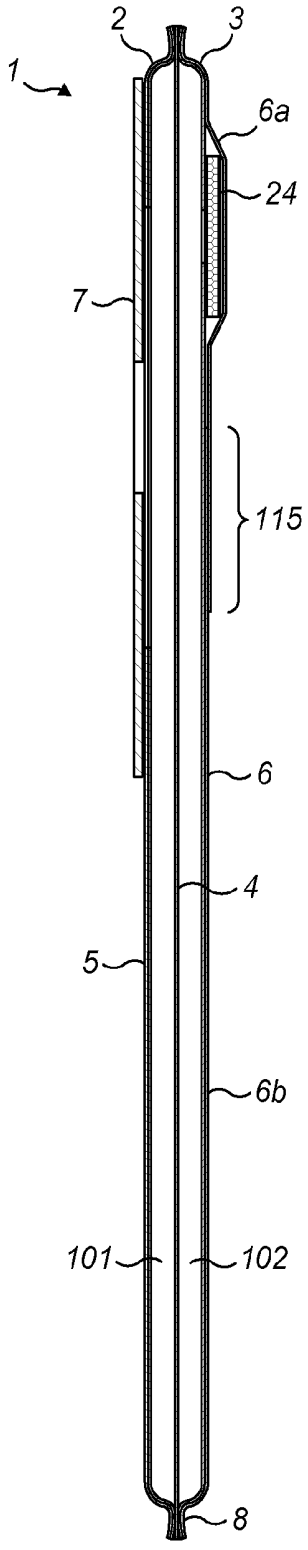


FIG. 6

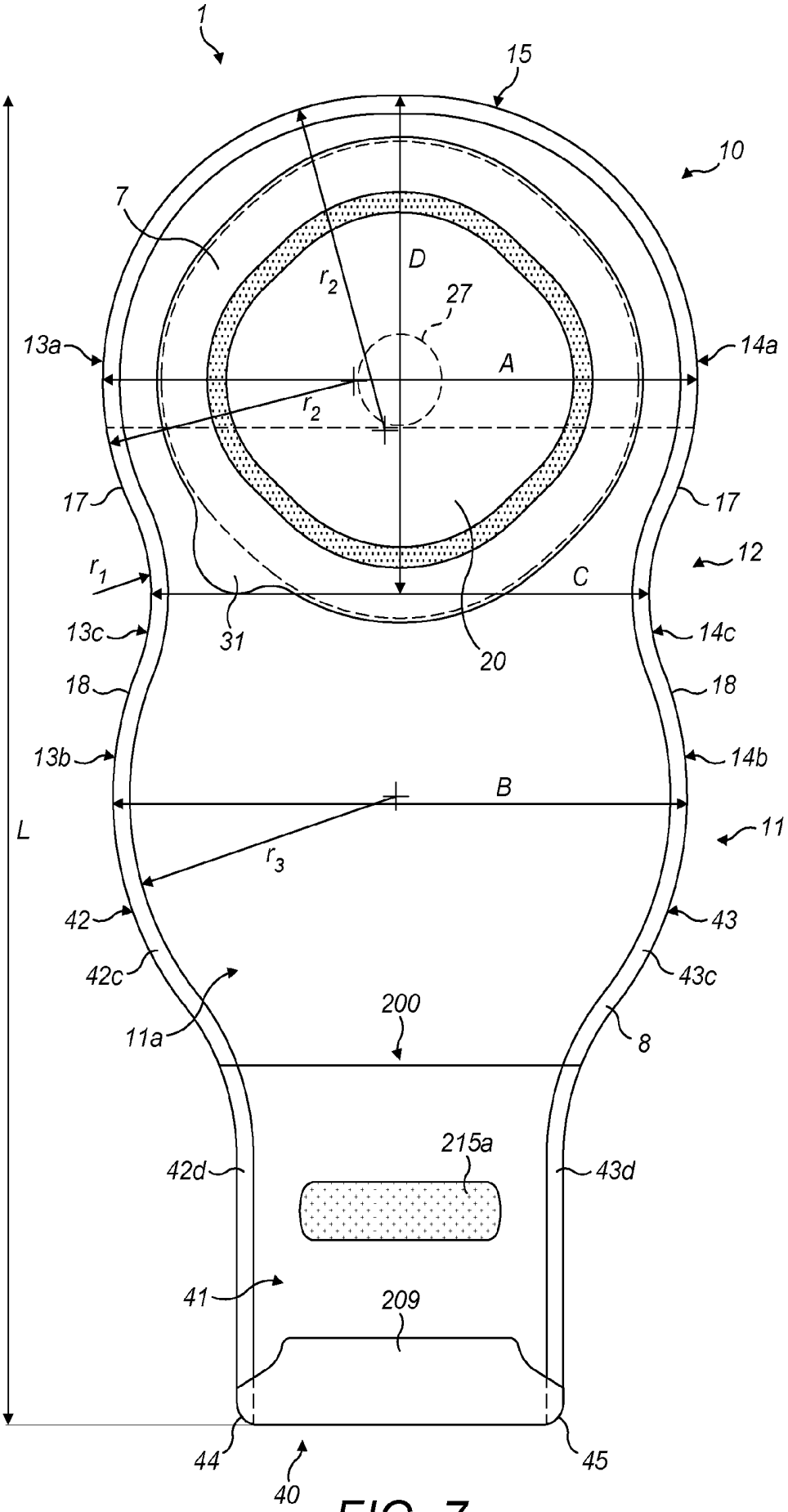
1
15
10
7
D
$r_2$
27
13a
14a
A
$r_2$
17
17
12
$r_1$
C
13c
14c
31
20
18
18
13b
14b
B
L
11
$r_3$
42
43
42c
43c
200
11a
8
215a
42d
43d
41
209
44
45
40

FIG. 7

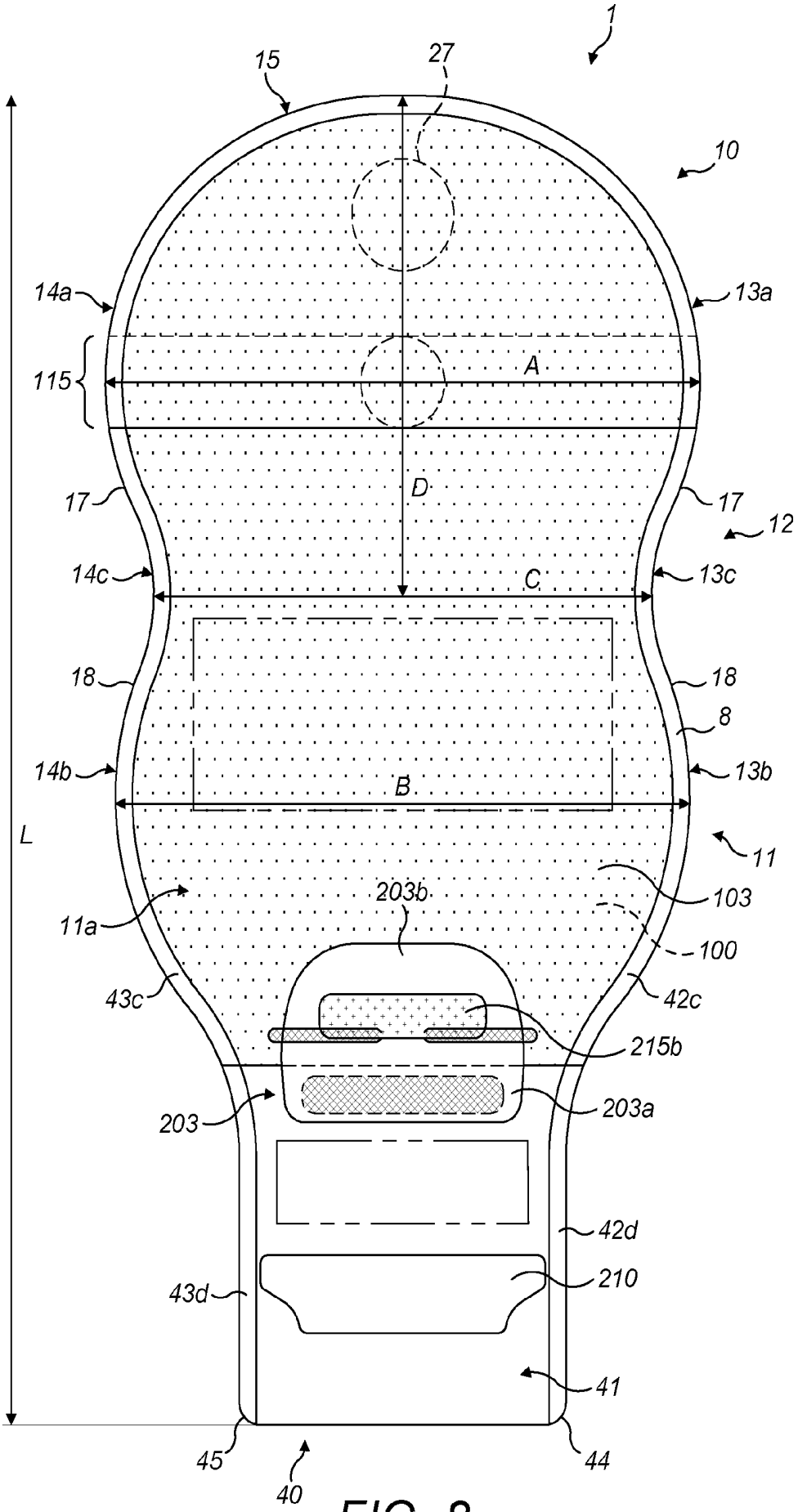
1
15
27
10
14a
13a
115
A
D
17
17
12
14c
C
13c
18
18
8
14b
13b
B
L
11
203b
103
11a
100
43c
42c
215b
203
203a
42d
43d
210
41
45
40
44

FIG. 8

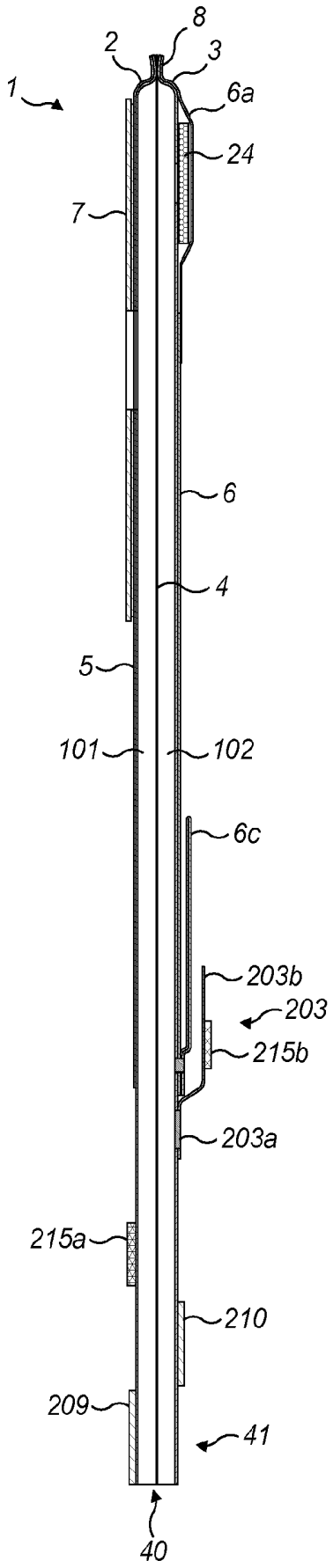


FIG. 9

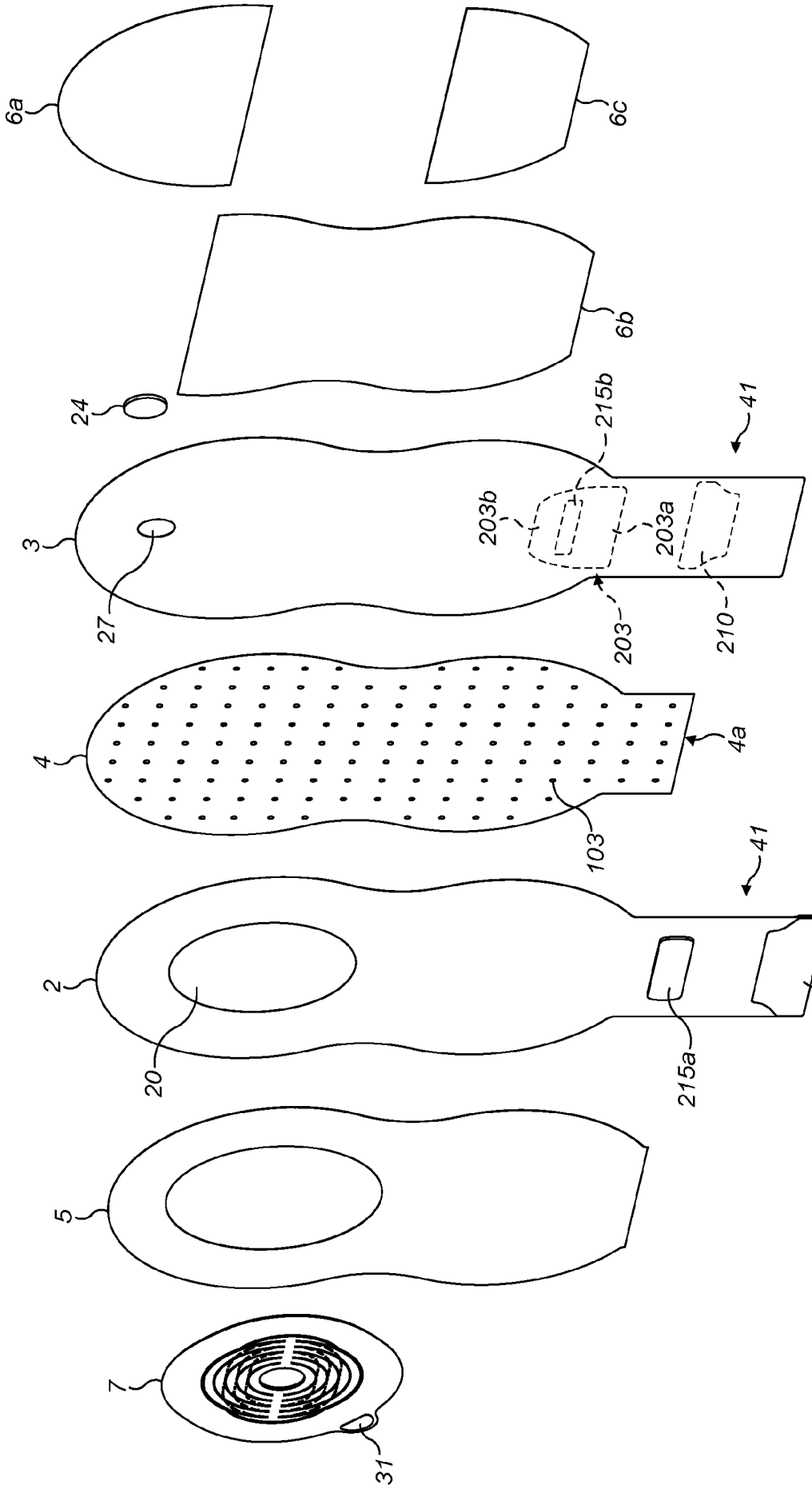
6a
6c
6b
24
215b
41
3
203b
203a
27
203
210
4
4a
103
41
2
209
20
215a
5
7
31

FIG. 10

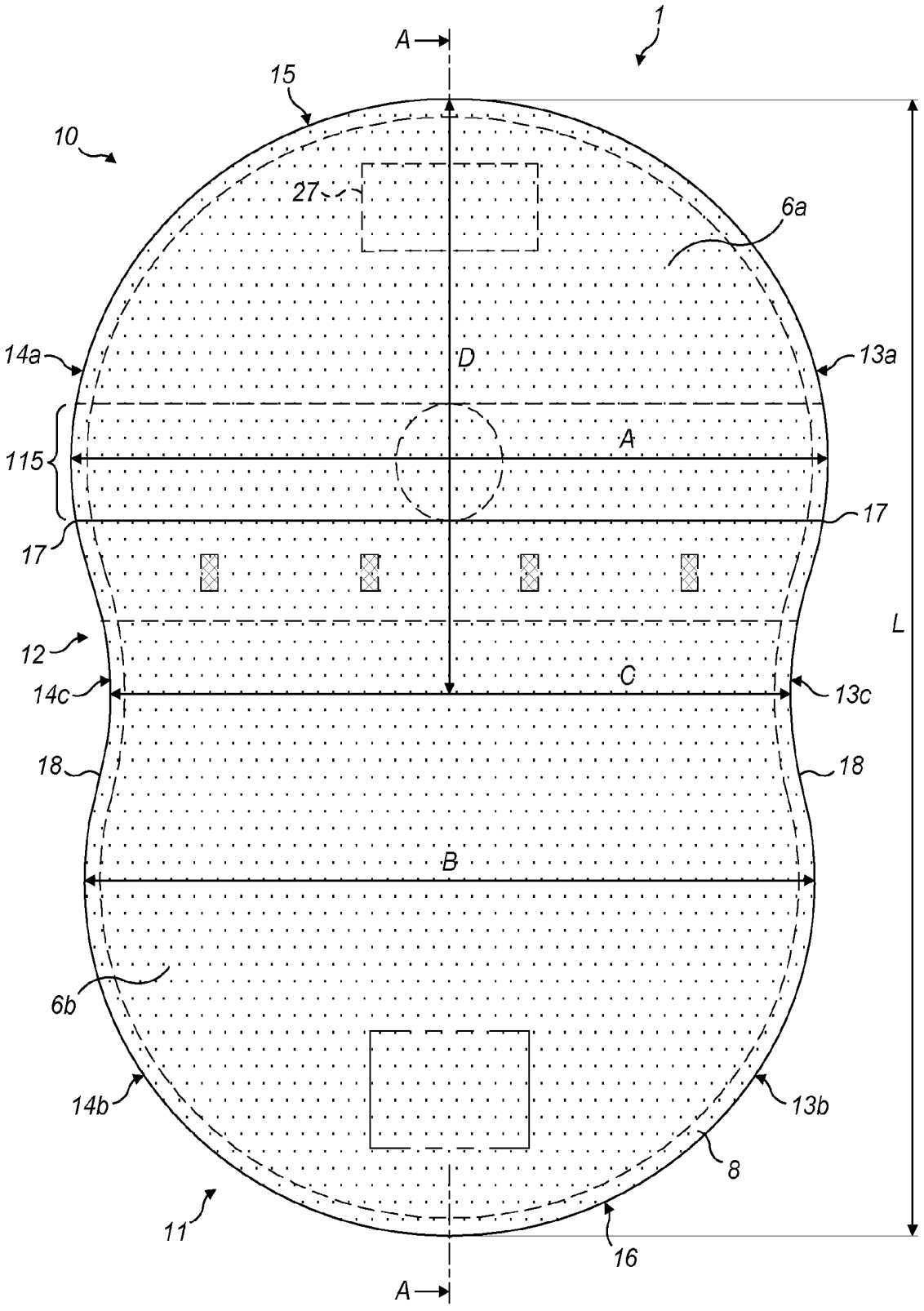
1
A
15
10
27
6a
14a
D
13a
115
A
17
17
12
L
C
14c
13c
18
18
B
6b
14b
13b
8
11
16
A

FIG. 11A

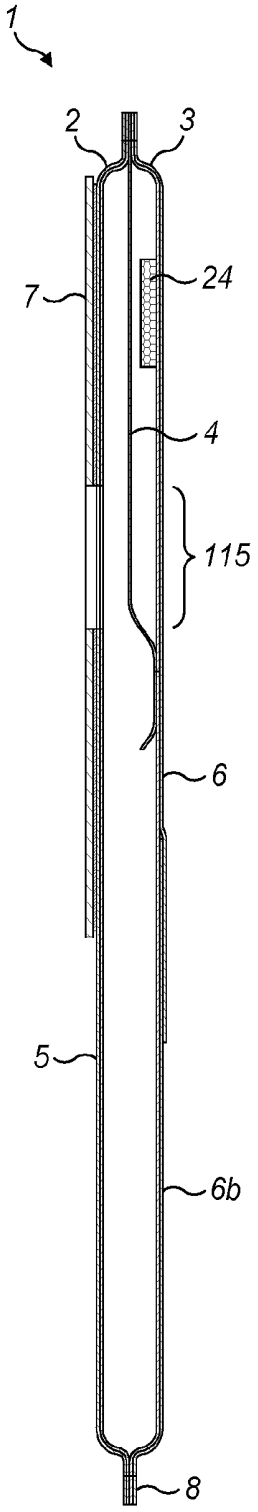


FIG. 11B

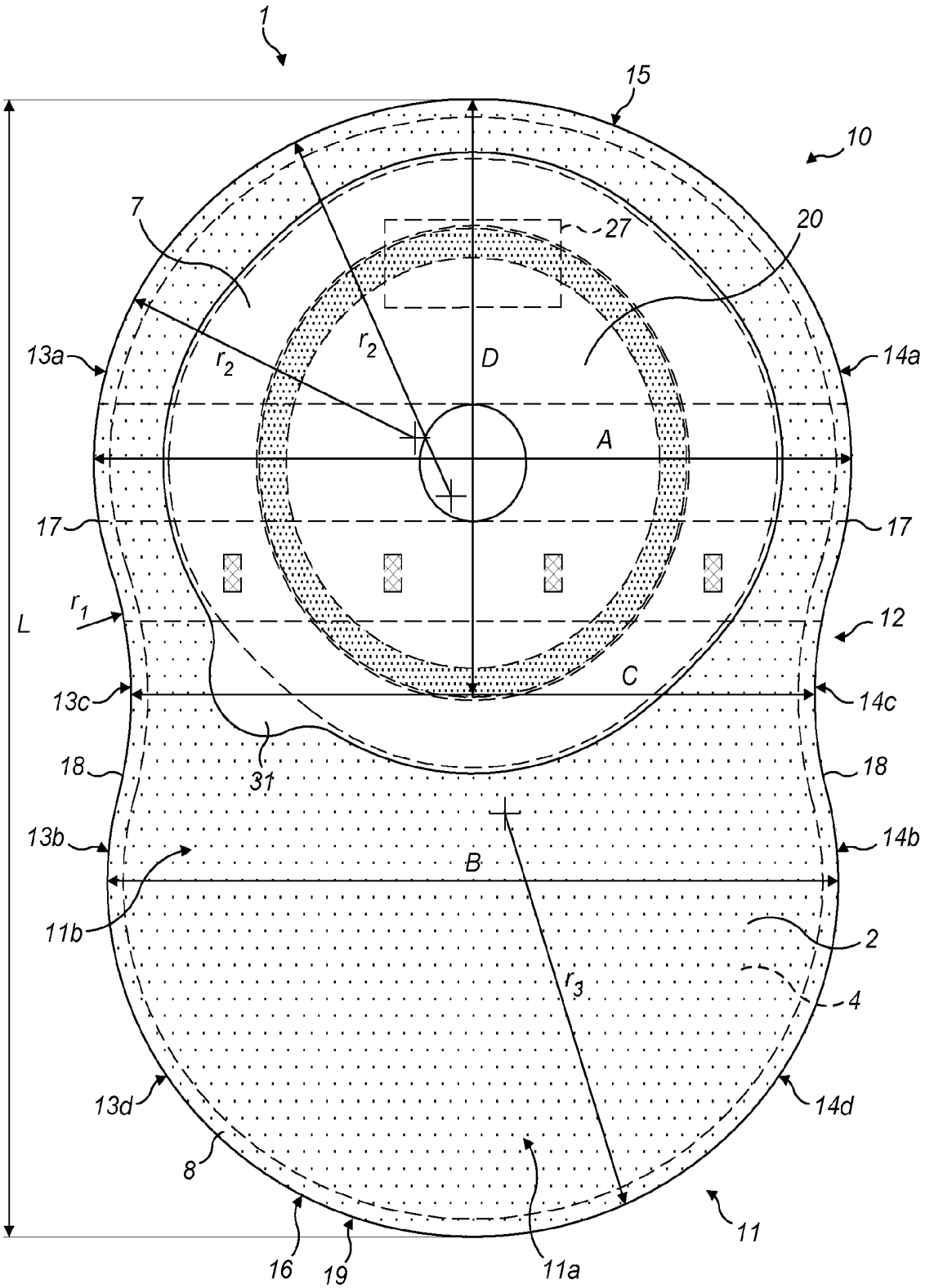
1
15
10
7
27
20
13a
$r_2$
$r_2$
D
14a
A
17
17
$r_1$
L
12
C
13c
14c
18
31
18
13b
14b
B
11b
2
$r_3$
4
13d
14d
8
11
16
19
11a

FIG. 11C

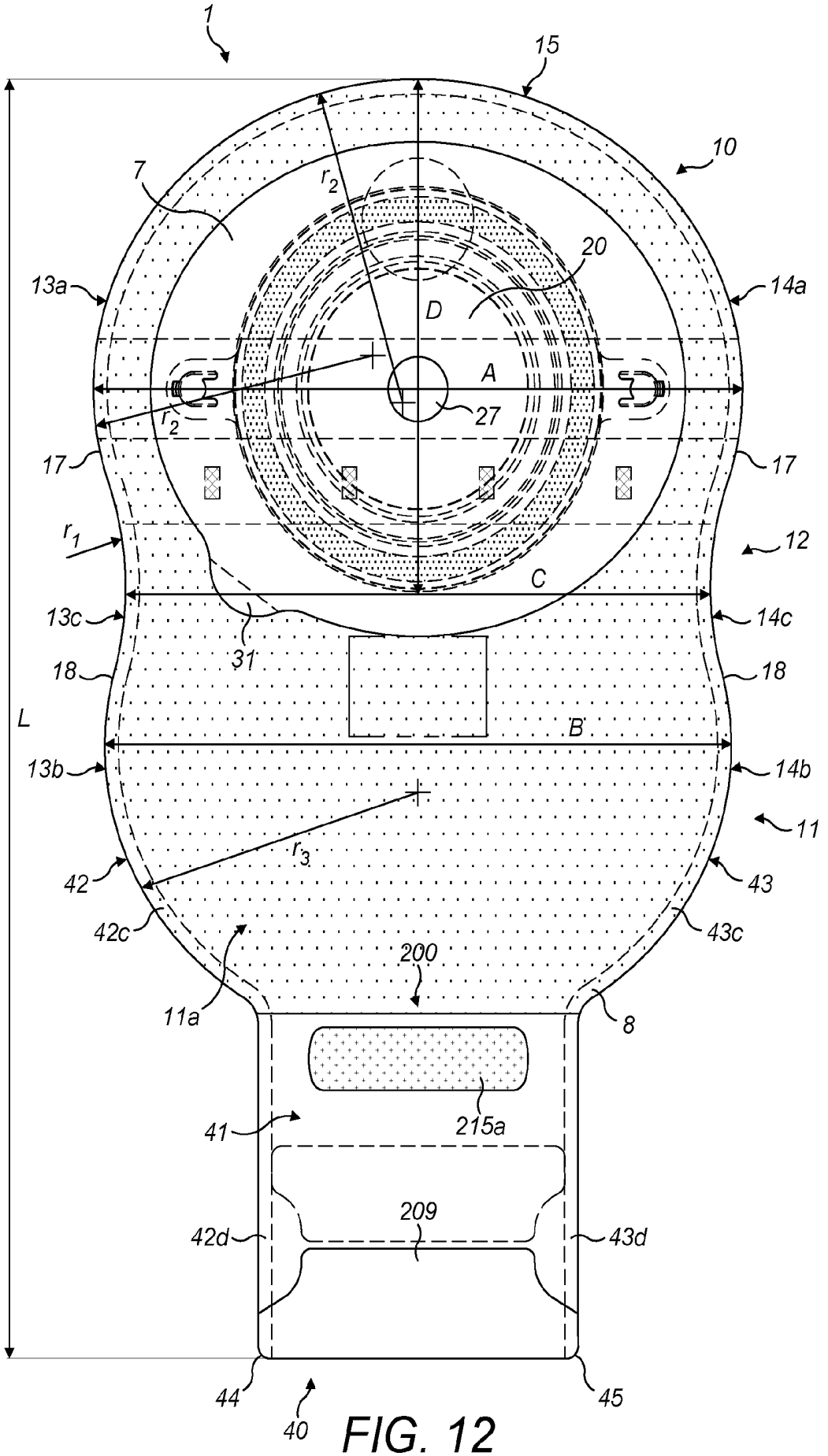
1
15
10
7
$r_2$
20
13a
14a
D
A
27
$r_2$
17
17
$r_1$
12
C
13c
14c
31
18
18
L
B
13b
14b
11
$r_3$
42
43
42c
43c
200
11a
8
215a
41
209
42d
43d
44
45
40

FIG. 12

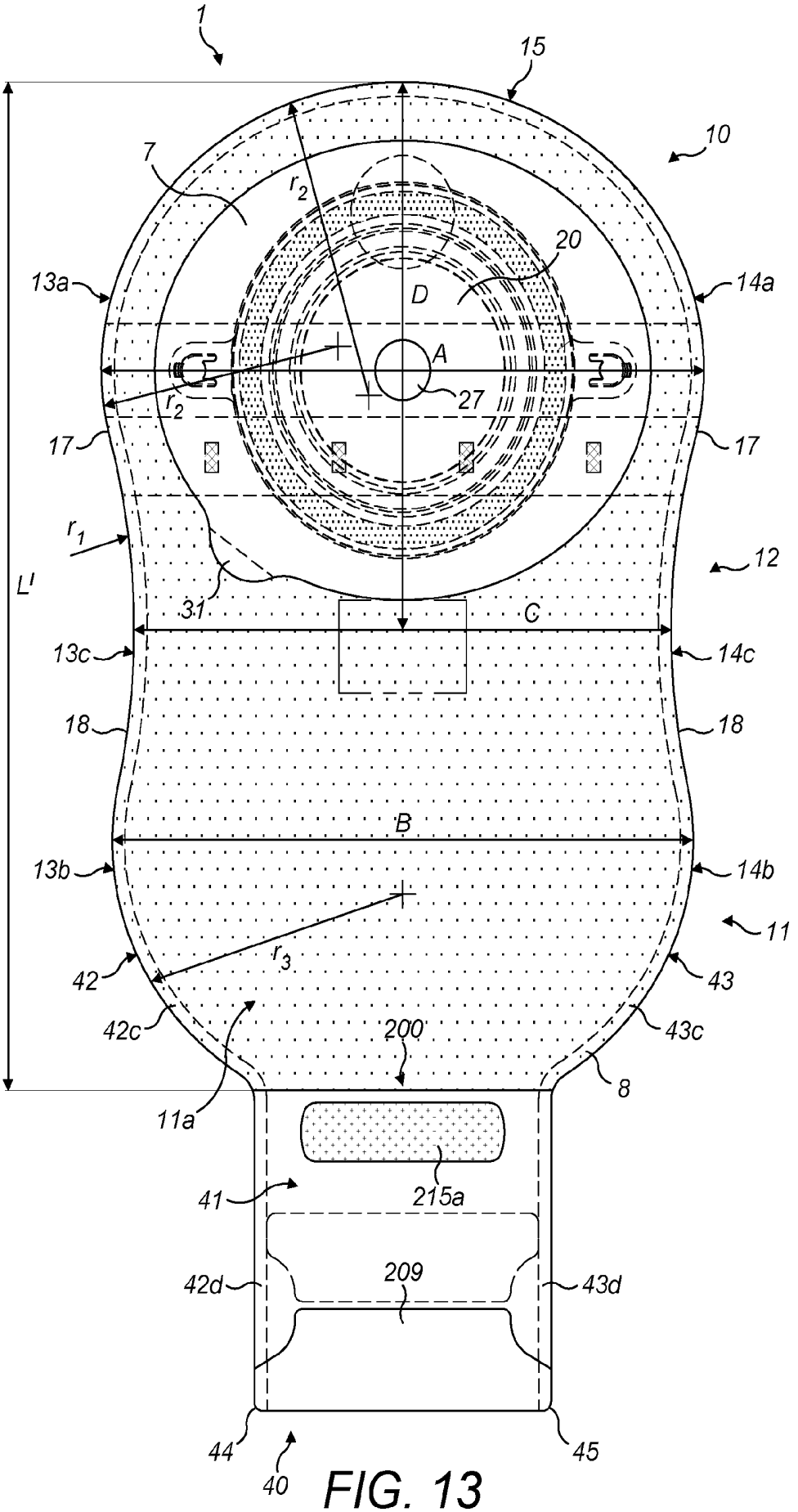
1
15
10
7
$r_2$
20
13a
14a
D
A
27
$r_2$
17
17
$r_1$
12
L'
31
C
13c
14c
18
18
B
13b
14b
11
$r_3$
42
43
42c
43c
200
8
11a
215a
41
209
42d
43d
44
45
40

FIG. 13

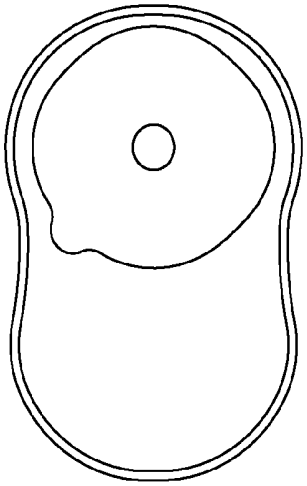

Example 1

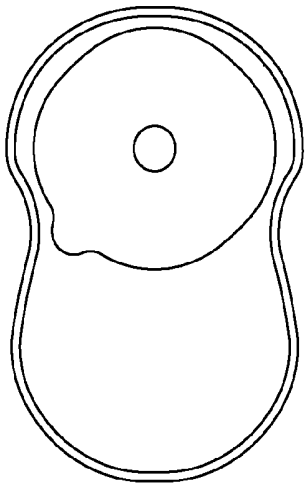

Example 2

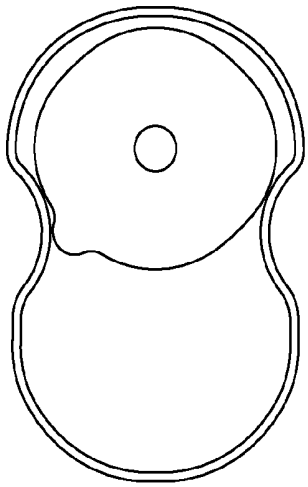

Example 3

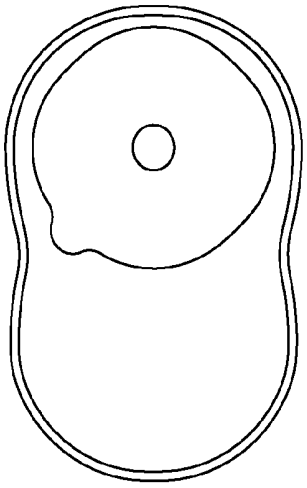

Example 4

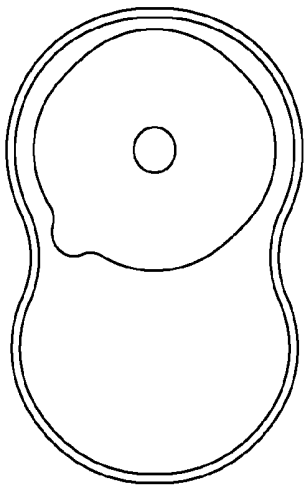

Example 5

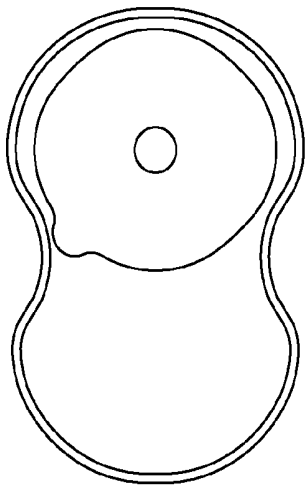

Example 6

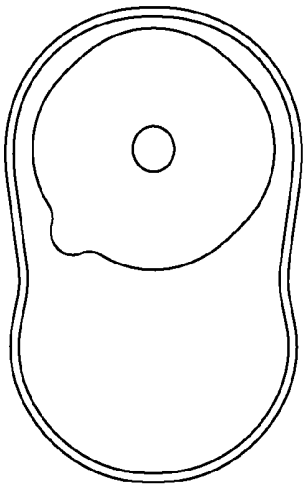

Example 7

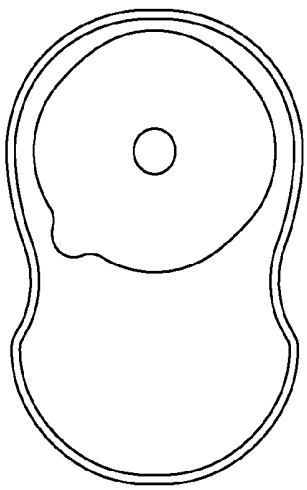

Example 8

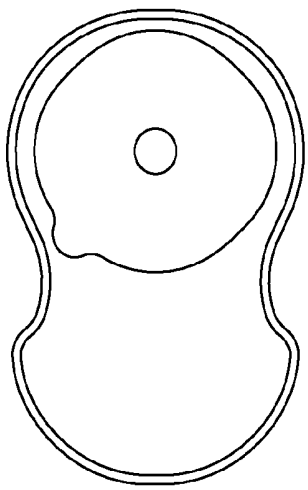

Example 9

FIG. 14

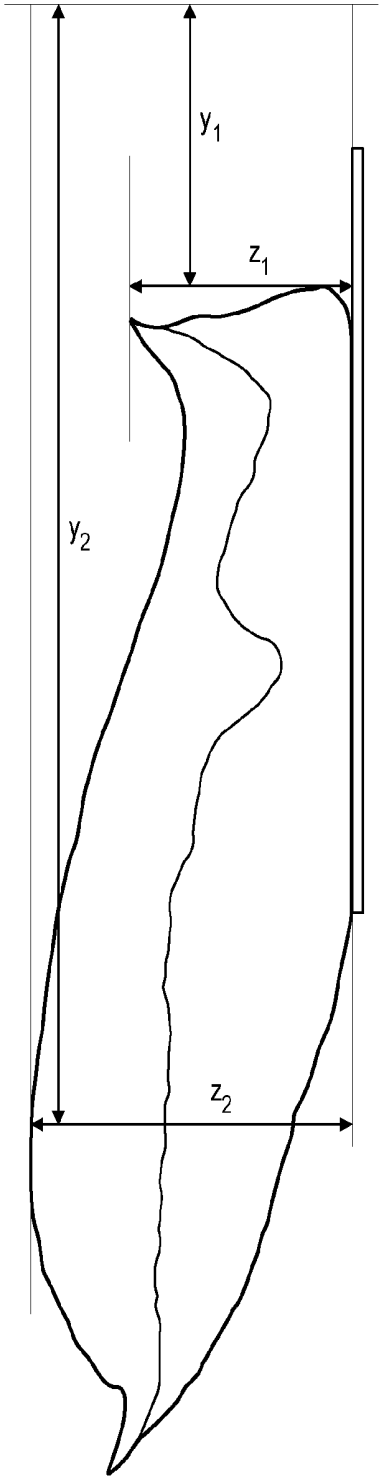


FIG. 15

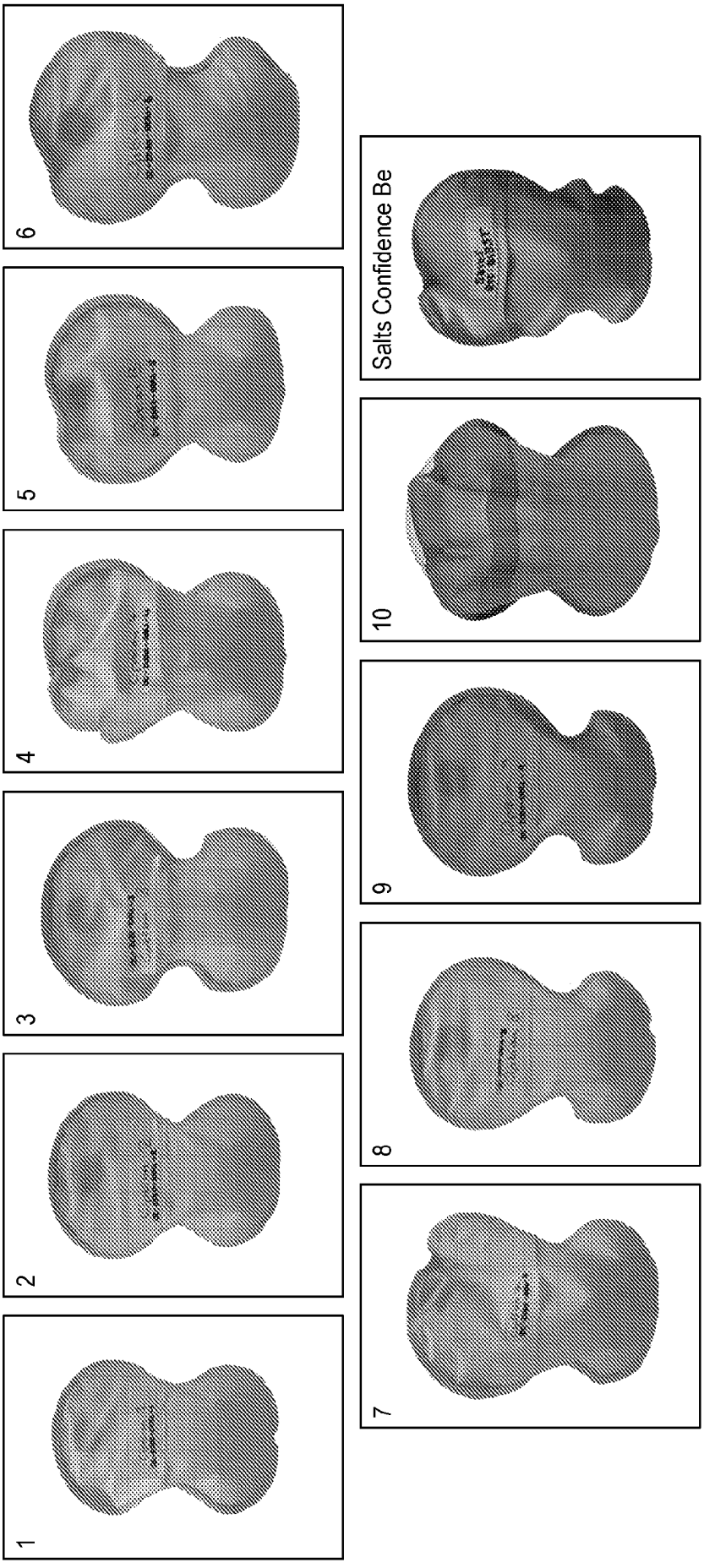


FIG. 16

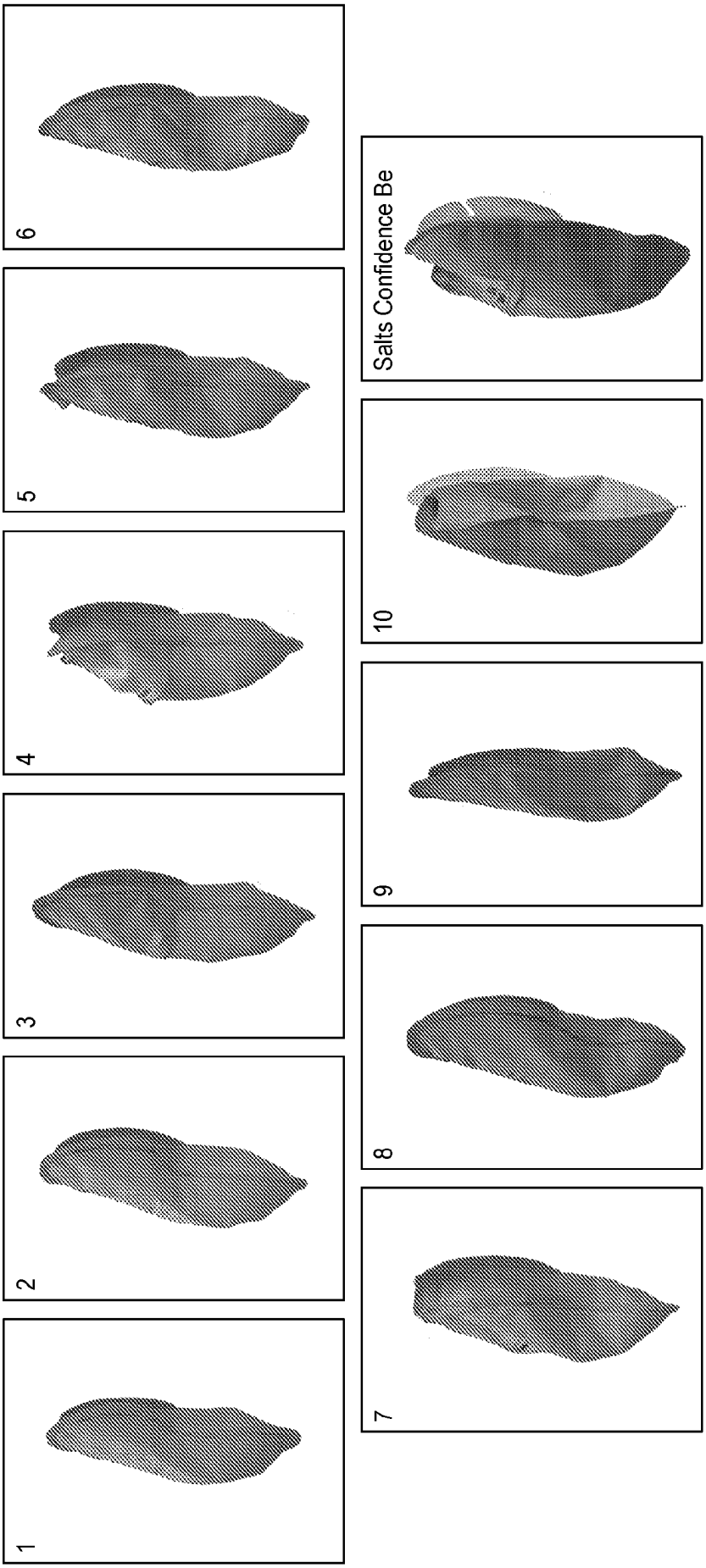


FIG. 17

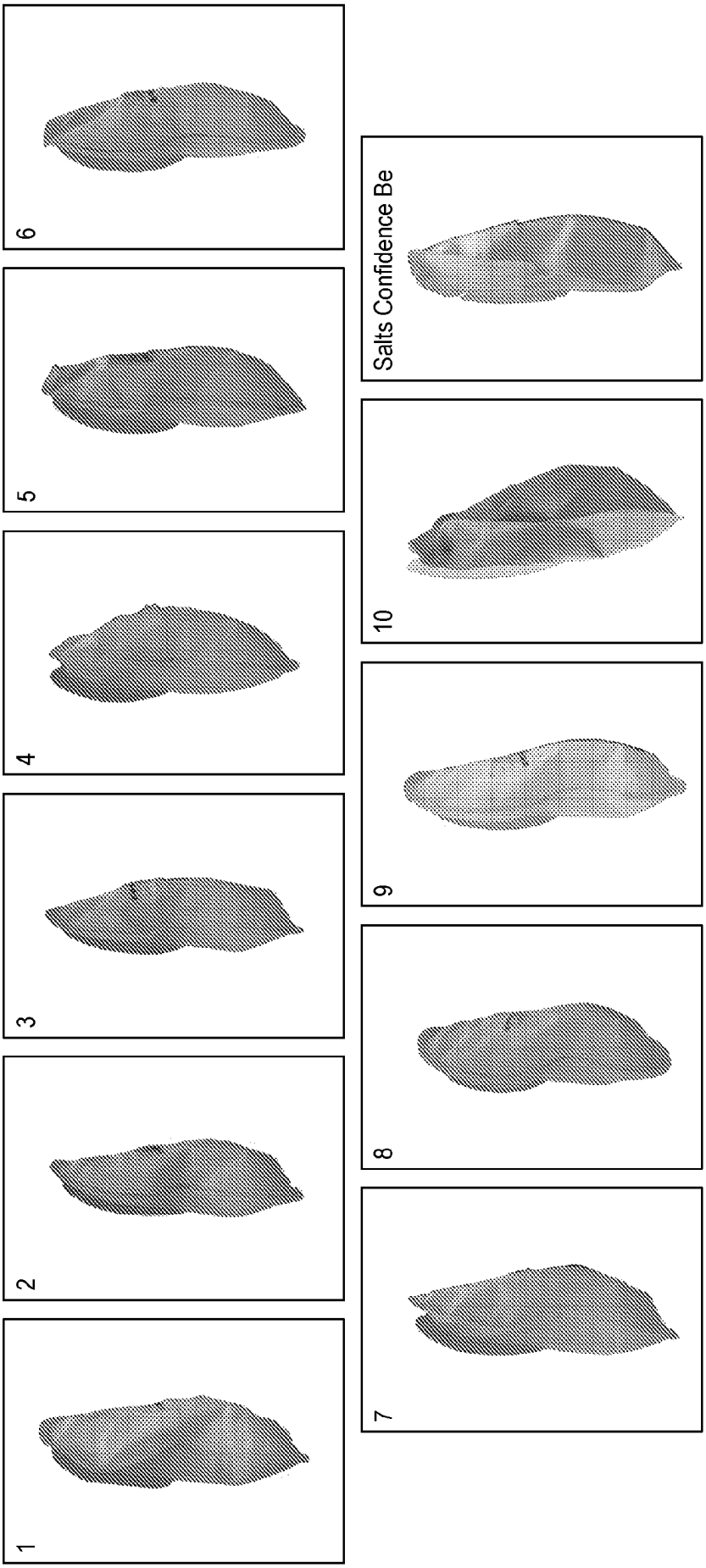


FIG. 18

| Example | Appliance Volume | | Measurements when appliance was filled to 75% capacity (mm) | | | | | | | |
|---|---|---|---|---|---|---|---|---|---|---|
| | 100% capacity (ml) | 75% capacity (ml) | Y1 | Y2 | Z1 | Z2 | Y1/75% (mm/ml) | Y2/75% (mm/ml) | Z1/75% (mm/ml) | Z2/75% (mm/ml) |
| 1 | 430.0 | 325.0 | 5.0 | 131.5 | 15.0 | 49.5 | 0.015 | 0.405 | 0.046 | 0.152 |
| 2 | 406.7 | 305.0 | 4.0 | 136.5 | 17.5 | 51.0 | 0.013 | 0.448 | 0.057 | 0.167 |
| 3 | 360.0 | 270.0 | 1.0 | 133.5 | 9.0 | 48.5 | 0.004 | 0.494 | 0.033 | 0.180 |
| 4 | 443.3 | 335.0 | 13.5 | 103.5 | 14.0 | 55.0 | 0.040 | 0.309 | 0.042 | 0.164 |
| 5 | 383.3 | 290.0 | 12.0 | 139.0 | 25.5 | 51.0 | 0.041 | 0.479 | 0.088 | 0.176 |
| 6 | 346.7 | 260.0 | 3.0 | 132.0 | 10.5 | 50.5 | 0.012 | 0.508 | 0.040 | 0.194 |
| 7 | 441.7 | 330.0 | 10.5 | 129.0 | 15.5 | 54.5 | 0.032 | 0.391 | 0.047 | 0.165 |
| 8 | 391.7 | 295.0 | 3.0 | 144.5 | 15.0 | 50.0 | 0.010 | 0.490 | 0.051 | 0.169 |
| 9 | 346.7 | 260.0 | 1.5 | 147.0 | 13.0 | 49.5 | 0.006 | 0.565 | 0.050 | 0.190 |
| 10 | 366.6 | 270.0 | 21.7 | 130.3 | 19.3 | 50.0 | 0.080 | 0.482 | 0.071 | 0.185 |
| Salts Confidence Be | 310.0 | 235.0 | 8.0 | 126.5 | 5.5 | 46.0 | 0.034 | 0.538 | 0.023 | 0.196 |

FIG. 19