9605755-9
1905

REPLACED SHEETS SG
☑ Description : paged ...1.... to paged ...14....
☑ Claim(s) : paged ...15.... to paged ...16.....
☑ Drawing(s) : paged ...1/3... to paged ...3/3....
☑ Abstract : paged ...17.... to paged ...18.....
DATE OF RECEIPT .....

TITLE OF THE INVENTION

ROTATION OPERATING DEVICE OF VARIABLE RESISTOR

BACKGROUND OF THE INVENTION

The present invention relates to a rotation operating device for transferring the rotation of a knob to a sliding contact in a variable resistor in which the sliding contact is moved by rotating the knob to thereby continuously adjust or change a resistance value.

Such a kind of variable resistor is used as one of composing parts such as various circuits, devices, and the like and is used to adjust their gains, sensitivities, and the like.

The rotation operating devices of the variable resistor are mainly classified into a single rotating type and a multi rotating type. According to the single rotating type, the resistance value is changed from the minimum value to the maximum value by rotating once (strictly speaking, one rotation, i.e., 360° or less) the knob. On the other hand, according to the multi rotating type, the knob is rotated once or more to change the resistance value from the minimum value to the maximum value.

In the rotation operating device of the single

This Sheet Has Been Replaced

rotating type, the knob is merely come into engagement with the rotating portion of the sliding contact of the variable resistor. Therefore, when the knob is rotated to an angle over a rotatable range, there is a fear such that the variable resistor and the rotation operating device are damaged. In addition, since the rotatable range of the knob is one rotation or less, it is difficult to finely adjust the resistance.

In the rotation operating device of the multi rotating type, a first gear is attached to the knob. On the other hand, a second gear larger than the first gear is attached to the rotating portion of the sliding contact of the variable resistor. The first and second gears are come into engagement with each other. The rotatable range of the knob is decided by the gear ratio of the first and second gears. In the case of the multi rotating type, although the resistance value can be finely adjusted, the first and second gears must be arranged in the lateral direction, so that there is a disadvantage such that the structure increases in size. Moreover, since the knob is rotated a plurality of times and the rotation angle position of the knob does not coincide with the angle position of the sliding contact, there is a drawback such that it is difficult to know the angular position of the sliding

This Sheet Has Been Replaced

contact from the angle position of the knob.

SUMMARY OF THE INVENTION

It is an object of the present invention to provide a rotation operating device of the multi rotating type in which the device can be miniaturized, the angle position of a sliding contact can be known, and even if a knob is rotated to an angle over its limit rotating range, the device is hard to be broken.

A rotation operating device of a variable resistor according to the present invention comprises: a knob to apply a rotating force from the outside; a supporting member formed with a hole adapted to rotatably support the knob; and an intermediate member which is rotatably supported to the supporting member and transfers the rotating force of the knob to a sliding contact of a variable resistor.

An upper surface member of the supporting member is transparent or translucent. An annular groove having both ends is formed on the inner surface of the upper surface member so as to surround the hole. Both ends of the annular groove serve as stoppers.

The upper portion of the knob passes through the hole and faces the outside of the upper surface member. A first gear is formed in the lower portion of the knob.

The intermediate member has a bottom surface portion

This Sheet Has Been Replaced

and a peripheral wall. A part of the peripheral wall is notched. A second gear adapted to be come into engagement with the first gear is formed on the inner surface of the peripheral wall in a predetermined range. A position indicating portion is located in the notch of the peripheral wall and is projected upwardly than the upper surface of the peripheral wall and is movably fitted into the annular groove of the supporting member. The position indicating portion is coupled with the bottom surface portion through a spring member. The bottom surface portion is in engagement with the sliding contact of the variable resistor supported to the supporting member.

According to the present invention, the second gear is formed on the inner surface of the peripheral wall of the intermediate member which is come into engagement with the rotating portion of the sliding contact of the variable resistor. The first gear formed in the lower portion of the knob is arranged inside of the peripheral wall and is in engagement with the second gear. Therefore, the knob, intermediate member, and variable resistor can be arranged in the vertical direction and the device can be miniaturized.

Since the device is of the multi rotating type, even if the rotating angle of the knob is large, a change in resistance value is relatively small and

This Sheet Has Been Replaced

the resistance value can be finely adjusted.

Further, the rotating angle of the rotating portion of the sliding contact of the variable resistor and the rotating angle of the intermediate member certainly coincide. The rotating angle position of the intermediate member is indicated by the position of the position indicating portion. The position indicating portion can be seen by the eyes through the transparent or translucent upper surface member of the supporting member. Thus, the position of the sliding contact of the variable resistor, that is, the resistance value can be clearly known.

The rotating range of the knob is determined by the positions of the stoppers of both ends of the annular groove. In other words, the positions at which the position indicating portion is come into contact with the stoppers correspond to the maximum and minimum values of the resistance value. The second gear is formed in a predetermined range on the inner surface of the peripheral wall of the intermediate member. At the position in which the position indicating portion is come into contact with the stoppers, the first gear reaches the edge portion of a forming range of the second gear. When the knob is further rotated to an angle over the forming range, the first gear is come into contact with the portion (inner surface of the

This Sheet Has Been Replaced

peripheral wall) in which the second gear is not formed. Therefore, even if an operator tries to rotate the knob to an angle over the limit angle position, the knob will be raced and the intermediate member will not be rotated. Consequently, the breakage of the variable resistor and the like can be prevented. Since the position indicating portion is coupled with the intermediate member through the spring member, the outer force which acts on the intermediate member when the position indicating portion abuts on the stopper is absorbed by the spring member. When no outer force is applied to the intermediate member due to the racing of the knob, the intermediate member is returned to the position at which the position indicating portion is substantially come into contact with the stopper by the recovery force of the spring member.

BRIEF DESCRIPTION OF THE DRAWINGS

Fig. 1 is an exploded perspective view of a rotation operating device of the multi rotating type according to an embodiment of the present invention;

Fig. 2 is an enlarged perspective view of the main section showing an engaging state of a gear of a shaft and a gear of an indicator; and

Fig. 3 is an external perspective view showing

This Sheet Has Been Replaced

a part of a photoelectric switch to which the multi rotating type device of the embodiment is installed.

DETAILED DESCRIPTION OF THE PREFERRED EMBODIMENT

Fig. 3 is an external perspective view showing a part of a photoelectric switch to which a variable resistor having a rotation operating device of the multi rotating type according to an embodiment of the present invention is installed for sensitivity control.

As conventionally well-known, the photoelectric switch is constructed such that light emitting and photo sensitive elements (not shown), a variable resistor for sensitivity control (which will be explained hereinlater), a mode change-over switch 11, and indicator lamps (red LED, green LED) 12 to check the operation are assembled in a casing 10.

A variable resistor 4 for sensitivity control is fixed to a holder 1 by inserting its three terminals 41 into terminal holes 1a of the holder 1. The variable resistor 4 is of the type in which its sliding contact (not shown) circularly moves (or rotates) to thereby continuously change a resistance value between the sliding contact and one terminal. The variable resistor 4 has a rotating portion (not shown) to rotatably support the sliding contact.

This Sheet Has Been Replaced

The rotation operating device to circularly move (or rotate) the sliding contact through the rotating portion of the variable resistor 4 includes the casing 10, a shaft portion 2, and an indicator 3.

The casing 10 has a box-like shape whose lower surface is opened. A transparent or translucent upper surface portion 51 is provided in the upper portion of the casing 10. Through holes 52 and 52a to rotatably support the shaft 2 and a shaft of the mode change-over switch 11 are opened in the surface of the upper surface portion 51. Further, an annular groove 53 is formed on the inner surface of the upper surface portion 51 on the outer peripheral side of the through hole 52.

The annular groove 53 is not formed as a whole circle (360°) but has both ends. Stairway-like stoppers 54 are formed at both ends of the annular groove 53. A position indicating portion 36 of the indicator 3 is movably fitted into the annular groove 53 and is guided. A partition enclosing chamber 55 to attach the indicator lamps 12 is formed in one end portion (on the side opposite to the through hole 52a of the mode change-over switch shaft) of the casing 10.

The upper portion of the shaft 2 is used as an operating knob portion 22 and a small gear 23 is formed in the lower portion of the shaft 2. The operating

This Sheet Has Been Replaced

knob portion 22 is rotatably fitted into the through hole 52 and faces the outside of the casing 10 (transparent upper surface portion 51). A rotation operating groove 22a is formed on the upper surface of the knob portion 22. The knob portion 22 is rotated by inserting the tip of a driver or the like into the groove 22a. The small gear 23 in the lower portion is come into engagement with an inner peripheral gear 33 of the indicator 3, which will be explained hereinlater.

The indicator 3 comprises: a disk-shaped bottom portion 31; a peripheral wall 32 which rises like a ring on the outer periphery of the disk-shaped bottom portion 31; the gear 33 (refer to Fig. 2) formed on the inner peripheral surface of the peripheral wall 32; and the position indicating portion 36 which is arranged in a notch 34 of the peripheral wall 32 and is communicated with the bottom portion 31 through a leaf spring portion 35.

As shown in Fig. 2, the disk-shaped bottom portion 31 has a diameter larger than that of the shaft 2. The ring-shaped peripheral wall 32 is projected on the outer periphery of the bottom portion 31. The notch 34 is formed at a proper position of the ring-shaped peripheral wall 32. The position indicating portion 36 is arranged in the notch 34. The gear 33 is formed

This Sheet Has Been Replaced

on the inner peripheral surface of the peripheral wall 32 excluding a portion 38 of a predetermined angle range, that is, a predetermined length from the edge on the side of the notch 34. The portion 38 in which the gear 33 is not formed is provided for allowing the gear 23 of the shaft 2 to race in the region out of the range from the maximum resistance value to the minimum resistance value of the variable resistor 4.

Two notched grooves 39 which are arranged in parallel at a predetermined distance are formed on the disk-shaped bottom portion 31 in correspondence to the notch 34. A portion (member) between the notched grooves 39 is used as the leaf spring portion 35. The position indicating portion 36 is integrally coupled with the front edge of the leaf spring portion 35. The position indicating portion 36 has a cylindrical shape and its height is set to be higher than the peripheral wall 32. The upper portion of the cylindrical body 36 is fitted into the annular groove 53. In this state, for instance, a black display color 36a of the upper surface of the position indicating portion (cylindrical body) 36 can be seen from the outside through the transparent or translucent upper surface portion 51.

A circular concave portion which is de-centered

This Sheet Has Been Replaced

from the hole 52 is formed on the inner surface of the casing 10. The indicator 3 is fitted into the concave portion and is rotatably supported.

An engaging projection 37 is formed at the center of the lower surface of the bottom portion 31 of the indicator 3 and is fitted into the rotating portion of the variable resistor 4. Thus, the rotating force of the indicator 3 is transferred to the rotating portion of the variable resistor 4 so that the sliding contact circularly moves (or rotates) and the resistance value of the variable resistor 4 changes.

The number of rotation times of the knob portion 22 which is necessary to change the resistance value of the variable resistor 4 from the maximum value to the minimum value is determined by the gear ratio of the gears 23 and 33. The gear ratio is decided such that when the knob portion 22 is rotated once or more, the resistance value changes within its adjusting range. On the other hand, the gear ratio is set in a manner such that when the resistance value becomes the maximum value, the position indicating portion 36 abuts on one of the stoppers 54, and when the resistance value becomes the minimum value, the position indicating portion 36 is come into contact with the other stopper 54.

For instance, when the sensitivity of the

This Sheet Has Been Replaced

photoelectric switch is adjusted by the rotation operating device of the multi rotating type having such a structure, the knob portion 22 is rotated. Thus, the indicator 3 having the gear 33 which is in engagement with the gear 23 of the shaft 2 rotates. That is, the resistance value of the variable resistor 4 is finely adjusted.

When the indicator 3 rotates, the movement in the annular groove 53 of the position indicating portion (color portion 36a for display) 36 can be seen from the transparent or translucent upper surface portion 51 of the casing 10. Now, assuming that the knob portion 22 was rotated a few times and the resistance value of the variable resistor 4 has reached the maximum value, the upper portion of the position indicating portion 36 abuts on the stopper 54 as one edge of the annular groove 53. Due to this, the stopper 54 blocks the further forward rotating operation of the indicator 3 (position, indicating portion 36). In this state, a part of the gear 23 of the shaft 2 corresponds to the portion 38 in which the gear on the inner peripheral surface of the peripheral wall 32 is not formed. When the knob portion 22 is further forwardly rotated in such a state, the indicator 3 intends to slightly rotate. At this time, the leaf spring portion 35 of the position indicating portion 36 is deformed and the spring force is accumulated.

This Sheet Has Been Replaced

At the same time, the gear 23 of the shaft 2 passes over the gear 33 of the indicator 3 which is in engagement with the gear 23. Namely, in this state, since the portion 38 in which the gear of the indicator 3 is not formed corresponds to a part of the shaft gear 23, the gear 23 of the shaft 2 races. When the gear 23 races, the indicator 3 is returned to the original position by the spring force of the leaf spring portion 35 and the gears 23 and 33 are again come into engagement with each other. When the knob is rotated forwardly (the same direction) in this manner, since the racing operation of the shaft 2 (gear 23) is repeated, the variable resistor 4 is not damaged. On the contrary, when the knob portion 22 of the shaft 2 is reversely rotated, the indicator 3 reversely rotates by the engaged gears (the gear 23 of the shaft and the gear 33 of the indicator), so that the sliding contact of the variable resistor 4 is moved in such a direction that the resistance value becomes the minimum value. After reaching the position of the minimum resistance value, the similar racing operation is executed.

Since the invention has been constructed as mentioned above, the shaft having the knob portion, the gear of the indicator which is come into engagement with the gear of the shaft, and the variable resistor to which the indicator is fitted and attached are arranged so as

This Sheet Has Been Replaced



to be vertically overlaid. Therefore, the device can be miniaturized as compared with the conventional multi rotating type. On the other hand, the moving state of the position indicating portion by the rotation of the operation knob portion can be seen through the transparent or translucent upper surface portion of the casing from the outside and the degree of adjustment of the resistance value of the variable resistor can be seen by the eyes. Further, in the case where the knob portion is rotated to an angle over the maximum or minimum value of the resistance value of the variable resistor, the knob portion (shaft) is raced, so that the varaible resistor is not broken. As mentioned above, various excellent advantages are obtained according to the invention.

This Sheet Has Been Replaced

* C L M S *

WHAT IS CLAIMED IS:

1. A rotation operating device of a variable resistor comprising:

a knob (2, 22) to apply a rotating force from an outside;

a supporting member (1, 10) formed with a hole (52) to rotatably support said knob; and

an intermediate member (3) which is rotatably supported to said supporting member and transfers the rotating force of the knob to a sliding contact of a variable resistor (4),

wherein an upper surface member (51) of said supporting member is transparent or translucent, an annular groove (53) having both ends is formed on an inner surface of said upper surface member so as to surround said hole, both ends of said annular groove serve as stoppers (54),

an upper portion of the knob passes through the hole and faces the outside of said upper surface member, a first gear (23) is formed in a lower portion of the knob,

said intermediate member has a bottom surface portion (31) and a peripheral wall (32), a notch (34) is formed in a part of the peripheral wall, a second gear (33) adapted to be come into engagement with the first gear is formed in a predetermined range on an inner surface of the poripheral wall, a position indicating portion (36) is located in the notch of the peripheral wall and is projected than

This Sheet Has Been Replaced

* C L M S *

an upper surface of the peripheral wall and is movably fitted into the annular groove of the supporting member, the position indicating portion is coupled with the bottom surface portion through a spring member (35), and the bottom surface portion is in engagement (37) with the sliding contact of the variable resistor supported to the supporting member.

2. A device according to claim 1, wherein said spring member is formed by forming two parallel notched grooves (30) in a part of said bottom surface portion.

3. A device according to claim 1, wherein a color portion is formed on the upper surface of the position indicating portion so as to be seen from the outside through the transparent or translucent upper surface member of the supporting member.

This Sheet Has Been Replaced

ABSTRACT OF THE DISCLOSURE

A rotation operating device of a variable resistor comprises: a knob (2, 22) to apply a rotating force from an outside; a supporting member (1, 10) formed with a hole (52) to rotatably support the knob; and an intermediate member (3) which is rotatably supported to the supporting member and transfers the rotating force of the knob to a sliding contact of the variable resistor (4). An upper surface member (51) of the supporting member is transparent or translucent. An annular groove (53) having both ends is formed on the inner surface of the upper surface member so as to surround the hole. Both ends of the annular groove are used as stoppers (54). The upper portion of the knob passes through the hole and faces the outside of the upper surface member. A first gear (23) is formed in the lower portion of the knob. The intermediate member has a bottom surface portion (31) and a peripheral wall (32). A notch (34) is formed in a part of the peripheral wall. A second gear (33) adapted to be come into engagement with the first gear is formed in a predetermined range on the inner surface of the peripheral wall. A position indicating portion (36) is located in the notch of the peripheral wall and is projected than the upper surface of the peripheral wall and is movably fitted into the annular groove of the supporting member. The position indicating portion is coupled with the botton surface portion

This Sheet Has Been Replaced



through a spring member (35). The bottom surface portion is in engagement (37) with the sliding contact of the variable resistor supported to the supporting member.

This Sheet Has Been Replaced

Fig. 1

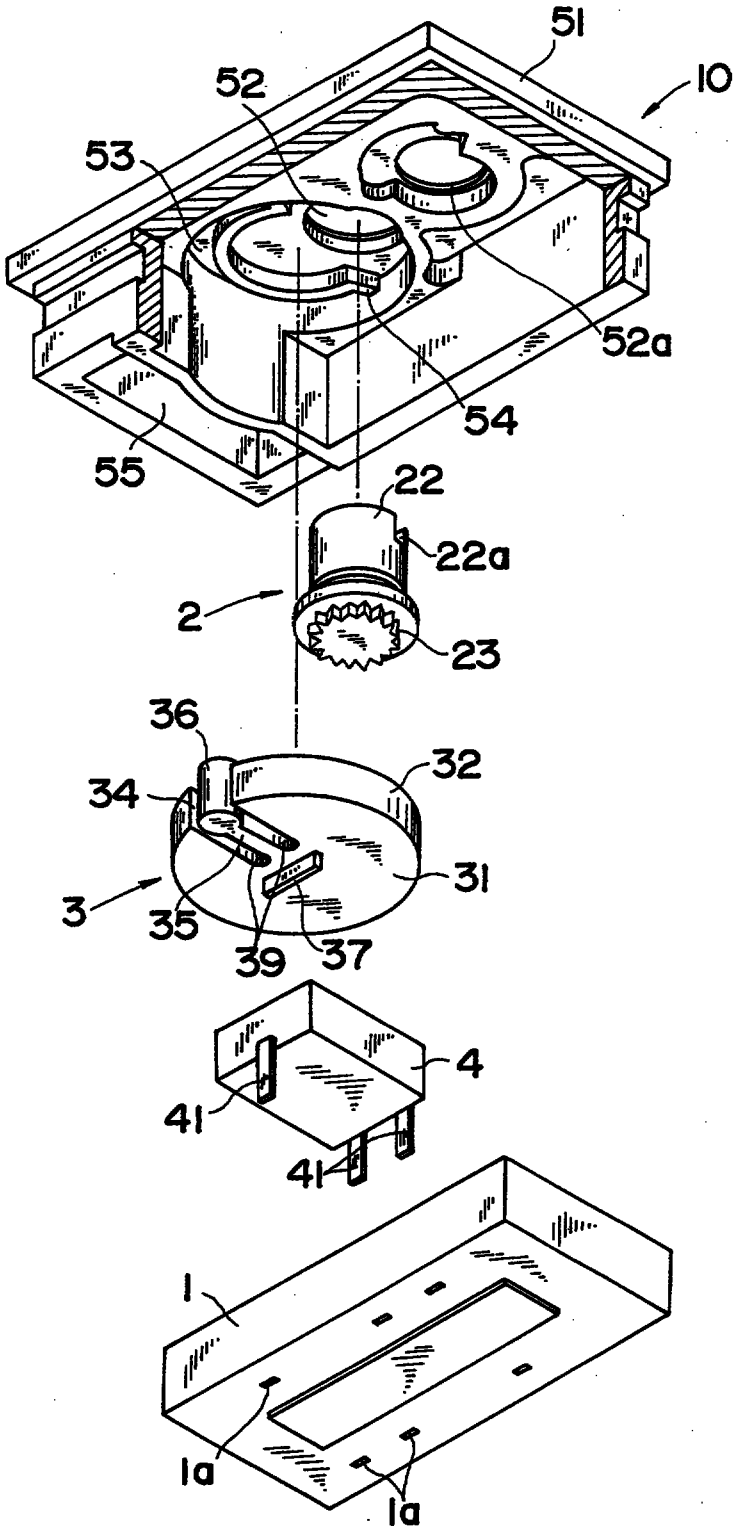

This Sheet Has Been Replaced

Fig.2

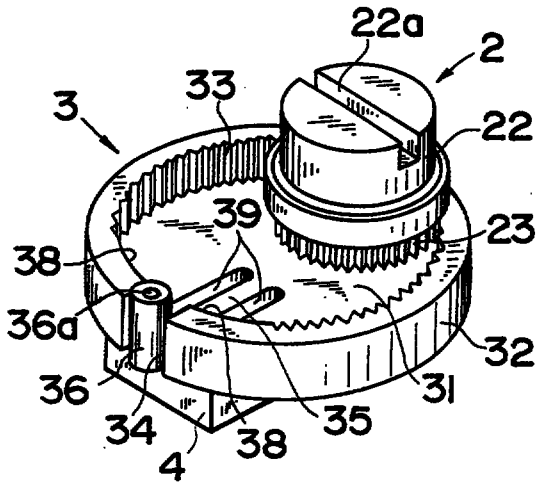

This Sheet Has Been Replaced

Fig.3

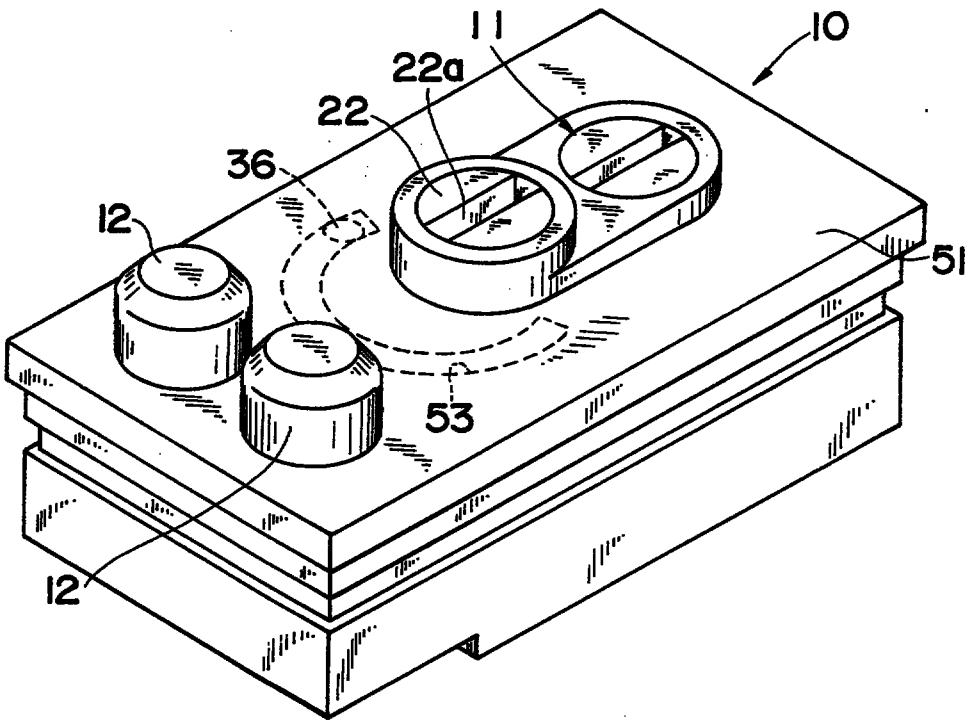

This Sheet Has Been Replaced

9605755-9 [10]

REPLACED SHEETS SG
✓ Description : paged 1 to paged 14
✓ Claim(s) : paged 15 to paged 14
✓ Drawing(s) : paged 1/3 to paged 3/3
✓ Abstract : paged — to paged —
RECEIPT 24/9/96

Substitute sheet - 18/9/96

TITLE OF THE INVENTION

ROTATION OPERATING DEVICE OF VARIABLE RESISTOR

BACKGROUND OF THE INVENTION

The present invention relates to a rotation operating device for transferring the rotation of a knob to a sliding contact in a variable resistor in which the sliding contact is moved by rotating the knob to thereby continuously adjust or change a resistance value.

Such a kind of variable resistor is used as one of composing parts such as various circuits, devices, and the like and is used to adjust their gains, sensitivities, and the like.

The rotation operating devices of the variable resistor are mainly classified into a single rotating type and a multi rotating type. According to the single rotating type, the resistance value is changed from the minimum value to the maximum value by rotating once (strictly speaking, one rotation, i.e., 360° or less) the knob. On the other hand, according to the multi rotating type, the knob is rotated once or more to change the resistance value from the minimum value to the maximum value.

In the rotation operating device of the single

This Sheet Has Been Replaced

REPLACED SHEETS SG
✓ Description : paged 1 to paged 14
✓ Claim(s) : paged 15 to paged 11
✓ Drawing(s) : paged 1/3 to paged 3/3
✓ Abstract : paged — to paged —
RECEIPT

REPLACEMENT SHEET
26 SEP 1996

rotating type, the knob is merely come into engagement with the rotating portion of the sliding contact of the variable resistor. Therefore, when the knob is rotated to an angle over a rotatable range, there is a fear such that the variable resistor and the rotation operating device are damaged. In addition, since the rotatable range of the knob is one rotation or less, it is difficult to finely adjust the resistance.

In the rotation operating device of the multi rotating type, a first gear is attached to the knob. On the other hand, a second gear larger than the first gear is attached to the rotating portion of the sliding contact of the variable resistor. The first and second gears are come into engagement with each other. The rotatable range of the knob is decided by the gear ratio of the first and second gears. In the case of the multi rotating type, although the resistance value can be finely adjusted, the first and second gears must be arranged in the lateral direction, so that there is a disadvantage such that the structure increases in size. Moreover, since the knob is rotated a plurality of times and the rotation angle position of the knob does not coincide with the angle position of the sliding contact, there is a drawback such that it is difficult to know the angular position of the sliding

This Sheet Has Been Replaced

REPLACEMENT SHEET
26 SEP 1996

Substitute sheet - 18/9/96

contact from the angle position of the knob.

SUMMARY OF THE INVENTION

It is an object of the present invention to provide a rotation operating device of the multi rotating type in which the device can be miniaturized, the angle position of a sliding contact can be known, and even if a knob is rotated to an angle over its limit rotating range, the device is hard to be broken.

A rotation operating device of a variable resistor according to the present invention comprises: a knob to apply a rotating force from the outside; a supporting member formed with a hole adapted to rotatably support the knob; and an intermediate member which is rotatably supported to the supporting member and transfers the rotating force of the knob to a sliding contact of a variable resistor.

An upper surface member of the supporting member is transparent or translucent. An annular groove having both ends is formed on the inner surface of the upper surface member so as to surround the hole. Both ends of the annular groove serve as stoppers.

The upper portion of the knob passes through the hole and faces the outside of the upper surface member. A first gear is formed in the lower portion of the knob.

The intermediate member has a bottom surface portion

This Sheet Has Been Replaced



REPLACEMENT SHEET
26 SEP 1996

Substitute sheet - 18/9/96

and a peripheral wall. A part of the peripheral wall is notched. A second gear adapted to be come into engagement with the first gear is formed on the inner surface of the peripheral wall in a predetermined range. A position indicating portion is located in the notch of the peripheral wall and is projected upwardly than the upper surface of the peripheral wall and is movably fitted into the annular groove of the supporting member. The position indicating portion is coupled with the bottom surface portion through a spring member. The bottom surface portion is in engagement with the sliding contact of the variable resistor supported to the supporting member.

According to the present invention, the second gear is formed on the inner surface of the peripheral wall of the intermediate member which is come into engagement with the rotating portion of the sliding contact of the variable resistor. The first gear formed in the lower portion of the knob is arranged inside of the peripheral wall and is in engagement with the second gear. Therefore, the knob, intermediate member, and variable resistor can be arranged in the vertical direction and the device can be miniaturized.

Since the device is of the multi rotating type, even if the rotating angle of the knob is large, a change in resistance value is relatively small and

This Sheet Has Been Replaced



REPLACEMENT SHEET
26 SEP 1996

Substitute sheet - 18/9/96

the resistance value can be finely adjusted.

Further, the rotating angle of the rotating portion of the sliding contact of the variable resistor and the rotating angle of the intermediate member certainly coincide. The rotating angle position of the intermediate member is indicated by the position of the position indicating portion. The position indicating portion can be seen by the eyes through the transparent or translucent upper surface member of the supporting member. Thus, the position of the sliding contact of the variable resistor, that is, the resistance value can be clearly known.

The rotating range of the knob is determined by the positions of the stoppers of both ends of the annular groove. In other words, the positions at which the position indicating portion is come into contact with the stoppers correspond to the maximum and minimum values of the resistance value. The second gear is formed in a predetermined range on the inner surface of the peripheral wall of the intermediate member. At the position in which the position indicating portion is come into contact with the stoppers, the first gear reaches the edge portion of a forming range of the second gear. When the knob is further rotated to an angle over the forming range, the first gear is come into contact with the portion (inner surface of the

This Sheet Has Been Replaced



REPLACEMENT SHEET
26 SEP 1996

Substitute sheet - 18/9/96

peripheral wall) in which the second gear is not formed. Therefore, even if an operator tries to rotate the knob to an angle over the limit angle position, the knob will be raced and the intermediate member will not be rotated. Consequently, the breakage of the variable resistor and the like can be prevented. Since the position indicating portion is coupled with the intermediate member through the spring member, the outer force which acts on the intermediate member when the position indicating portion abuts on the stopper is absorbed by the spring member. When no outer force is applied to the intermediate member due to the racing of the knob, the intermediate member is returned to the position at which the position indicating portion is substantially come into contact with the stopper by the recovery force of the spring member.

BRIEF DESCRIPTION OF THE DRAWINGS

Fig. 1 is an exploded perspective view of a rotation operating device of the multi rotating type according to an embodiment of the present invention;

Fig. 2 is an enlarged perspective view of the main section showing an engaging state of a gear of a shaft and a gear of an indicator; and

Fig. 3 is an external perspective view showing

This Sheet Has Been Replaced



REPLACEMENT SHEE
26 SEP 1996

a part of a photoelectric switch to which the multi rotating type device of the embodiment is installed.

DETAILED DESCRIPTION OF THE PREFERRED EMBODIMENT

Fig. 3 is an external perspective view showing a part of a photoelectric switch to which a variable resistor having a rotation operating device of the multi rotating type according to an embodiment of the present invention is installed for sensitivity control.

As conventionally well-known, the photoelectric switch is constructed such that light emitting and photo sensitive elements (not shown), a variable resistor for sensitivity control (which will be explained hereinlater), a mode change-over switch 11, and indicator lamps (red LED, green LED) 12 to check the operation are assembled in a casing 10.

A variable resistor 4 for sensitivity control is fixed to a holder 1 by inserting its three terminals 41 into terminal holes 1a of the holder 1. The variable resistor 4 is of the type in which its sliding contact (not shown) circularly moves (or rotates) to thereby continuously change a resistance value between the sliding contact and one terminal. The variable resistor 4 has a rotating portion (not shown) to rotatably support the sliding contact.

This Sheet Has Been Replaced



REPLACEMENT SHEET
26 SEP 1996

Substitute sheet - 18/9/96

The rotation operating device to circularly move (or rotate) the sliding contact through the rotating portion of the variable resistor 4 includes the casing 10, a shaft portion 2, and an indicator 3.

The casing 10 has a box-like shape whose lower surface is opened. A transparent or translucent upper surface portion 51 is provided in the upper portion of the casing 10. Through holes 52 and 52a to rotatably support the shaft 2 and a shaft of the mode change-over switch 11 are opened in the surface of the upper surface portion 51. Further, an annular groove 53 is formed on the inner surface of the upper surface portion 51 on the outer peripheral side of the through hole 52.

The annular groove 53 is not formed as a whole circle (360°) but has both ends. Stairway-like stoppers 54 are formed at both ends of the annular groove 53. A position indicating portion 36 of the indicator 3 is movably fitted into the annular groove 53 and is guided. A partition enclosing chamber 55 to attach the indicator lamps 12 is formed in one end portion (on the side opposite to the through hole 52a of the mode change-over switch shaft) of the casing 10.

The upper portion of the shaft 2 is used as an operating knob portion 22 and a small gear 23 is formed in the lower portion of the shaft 2. The operating

This Sheet Has Been Replaced



REPLACEMENT SHEET
26 SEP 1996

Substitute sheet - 18/9/96

knob portion 22 is rotatably fitted into the through hole 52 and faces the outside of the casing 10 (transparent upper surface portion 51). A rotation operating groove 22a is formed on the upper surface of the knob portion 22. The knob portion 22 is rotated by inserting the tip of a driver or the like into the groove 22a. The small gear 23 in the lower portion is come into engagement with an inner peripheral gear 33 of the indicator 3, which will be explained hereinlater.

The indicator 3 comprises: a disk-shaped bottom portion 31; a peripheral wall 32 which rises like a ring on the outer periphery of the disk-shaped bottom portion 31; the gear 33 (refer to Fig. 2) formed on the inner peripheral surface of the peripheral wall 32; and the position indicating portion 36 which is arranged in a notch 34 of the peripheral wall 32 and is communicated with the bottom portion 31 through a leaf spring portion 35.

As shown in Fig. 2, the disk-shaped bottom portion 31 has a diameter larger than that of the shaft 2. The ring-shaped peripheral wall 32 is projected on the outer periphery of the bottom portion 31. The notch 34 is formed at a proper position of the ring-shaped peripheral wall 32. The position indicating portion 36 is arranged in the notch 34. The gear 33 is formed

This Sheet Has Been Replaced



REPLACEMENT SHEET
26 SEP 1996

on the inner peripheral surface of the peripheral wall 32 excluding a portion 38 of a predetermined angle range, that is, a predetermined length from the edge on the side of the notch 34. The portion 38 in which the gear 33 is not formed is provided for allowing the gear 23 of the shaft 2 to race in the region out of the range from the maximum resistance value to the minimum resistance value of the variable resistor 4.

Two notched grooves 39 which are arranged in parallel at a predetermined distance are formed on the disk-shaped bottom portion 31 in correspondence to the notch 34. A portion (member) between the notched grooves 39 is used as the leaf spring portion 35. The position indicating portion 36 is integrally coupled with the front edge of the leaf spring portion 35. The position indicating portion 36 has a cylindrical shape and its height is set to be higher than the peripheral wall 32. The upper portion of the cylindrical body 36 is fitted into the annular groove 53. In this state, for instance, a black display color 36a of the upper surface of the position indicating portion (cylindrical body) 36 can be seen from the outside through the transparent or translucent upper surface portion 51.

A circular concave portion which is de-centered

This Sheet Has Been Replaced



REPLACEMENT SHEET
26 SEP 1996

Substitute sheet - 18/9/96

from the hole 52 is formed on the inner surface of the casing 10. The indicator 3 is fitted into the concave portion and is rotatably supported.

An engaging projection 37 is formed at the center of the lower surface of the bottom portion 31 of the indicator 3 and is fitted into the rotating portion of the variable resistor 4. Thus, the rotating force of the indicator 3 is transferred to the rotating portion of the variable resistor 4 so that the sliding contact circularly moves (or rotates) and the resistance value of the variable resistor 4 changes.

The number of rotation times of the knob portion 22 which is necessary to change the resistance value of the variable resistor 4 from the maximum value to the minimum value is determined by the gear ratio of the gears 23 and 33. The gear ratio is decided such that when the knob portion 22 is rotated once or more, the resistance value changes within its adjusting range. On the other hand, the gear ratio is set in a manner such that when the resistance value becomes the maximum value, the position indicating portion 36 abuts on one of the stoppers 54, and when the resistance value becomes the minimum value, the position indicating portion 36 is come into contact with the other stopper 54.

For instance, when the sensitivity of the

This Sheet Has Been Replaced



REPLACEMENT SHEET
26 SEP 1996

photoelectric switch is adjusted by the rotation operating device of the multi rotating type having such a structure, the knob portion 22 is rotated. Thus, the indicator 3 having the gear 33 which is in engagement with the gear 23 of the shaft 2 rotates. That is, the resistance value of the variable resistor 4 is finely adjusted.

When the indicator 3 rotates, the movement in the annular groove 53 of the position indicating portion (color portion 36a for display) 36 can be seen from the transparent or translucent upper surface portion 51 of the casing 10. Now, assuming that the knob portion 22 was rotated a few times and the resistance value of the variable resistor 4 has reached the maximum value, the upper portion of the position indicating portion 36 abuts on the stopper 54 as one edge of the annular groove 53. Due to this, the stopper 54 blocks the further forward rotating operation of the indicator 3 (position indicating portion 36). In this state, a part of the gear 23 of the shaft 2 corresponds to the portion 38 in which the gear on the inner peripheral surface of the peripheral wall 32 is not formed. When the knob portion 22 is further forwardly rotated in such a state, the indicator 3 intends to slightly rotate. At this time, the leaf spring portion 35 of the position indicating portion 36 is deformed and the spring force is accumulated.

This Sheet Has Been Replaced



REPLACEMENT SHEET
26 SEP 1996

At the same time, the gear 23 of the shaft 2 passes over the gear 33 of the indicator 3 which is in engagement with the gear 23. Namely, in this state, since the portion 38 in which the gear of the indicator 3 is not formed corresponds to a part of the shaft gear 23, the gear 23 of the shaft 2 races. When the gear 23 races, the indicator 3 is returned to the original position by the spring force of the leaf spring portion 35 and the gears 23 and 33 are again come into engagement with each other. When the knob is rotated forwardly (the same direction) in this manner, since the racing operation of the shaft 2 (gear 23) is repeated, the variable resistor 4 is not damaged. On the contrary, when the knob portion 22 of the shaft 2 is reversely rotated, the indicator 3 reversely rotates by the engaged gears (the gear 23 of the shaft and the gear 33 of the indicator), so that the sliding contact of the variable resistor 4 is moved in such a direction that the resistance value becomes the minimum value. After reaching the position of the minimum resistance value, the similar racing operation is executed.

Since the invention has been constructed as mentioned above, the shaft having the knob portion, the gear of the indicator which is come into engagement with the gear of the shaft, and the variable resistor to which the indicator is fitted and attached are arranged so as

This Sheet Has Been Replaced



REPLACEMENT SHEET
26 SEP 1996

to be vertically overlaid. Therefore, the device can be miniaturized as compared with the conventional multi rotating type. On the other hand, the moving state of the position indicating portion by the rotation of the operation knob portion can be seen through the transparent or translucent upper surface portion of the casing from the outside and the degree of adjustment of the resistance value of the variable resistor can be seen by the eyes. Further, in the case where the knob portion is rotated to an angle over the maximum or minimum value of the resistance value of the variable resistor, the knob portion (shaft) is raced, so that the varaible resistor is not broken. As mentioned above, various excellent advantages are obtained according to the invention.

This Sheet Has Been Replaced



REPLACEMENT SHEET
26 SEP 1996

WHAT IS CLAIMED IS:

1. A rotation operating device of a variable resistor comprising:

a knob (2, 22) to apply a rotating force from an outside;

a supporting member (1, 10) formed with a hole (52) to rotatably support said knob; and

an intermediate member (3) which is rotatably supported to said supporting member and transfers the rotating force of the knob to a sliding contact of a variable resistor (4),

wherein an upper surface member (51) of said supporting member is transparent or translucent, an annular groove (53) having both ends is formed on an inner surface of said upper surface member so as to surround said hole, both ends of said annular groove serve as stoppers (54),

an upper portion of the knob passes through the hole and faces the outside of said upper surface member, a first gear (23) is formed in a lower portion of the knob,

said intermediate member has a bottom surface portion (31) and a peripheral wall (32), a notch (34) is formed in a part of the peripheral wall, a second gear (33) adapted to be come into engagement with the first gear is formed in a predetermined range on an inner surface of the poripheral wall, a position indicating portion (36) is located in the notch of the peripheral wall and is projected than

This Sheet Has Been Replaced

REPLACEMENT SHEET
26 SEP 1996

an upper surface of the peripheral wall and is movably fitted into the annular groove of the supporting member, the position indicating portion is coupled with the bottom surface portion through a spring member (35), and the bottom surface portion is in engagement (37) with the sliding contact of the variable resistor supported to the supporting member.

2. A device according to claim 1, wherein said spring member is formed by forming two parallel notched grooves (30) in a part of said bottom surface portion.

3. A device according to claim 1, wherein a color portion is formed on the upper surface of the position indicating portion so as to be seen from the outside through the transparent or translucent upper surface member of the supporting member.

This Sheet Has Been Replaced

REPLACEMENT SHEET
26 SEP 1996

Fig. 1

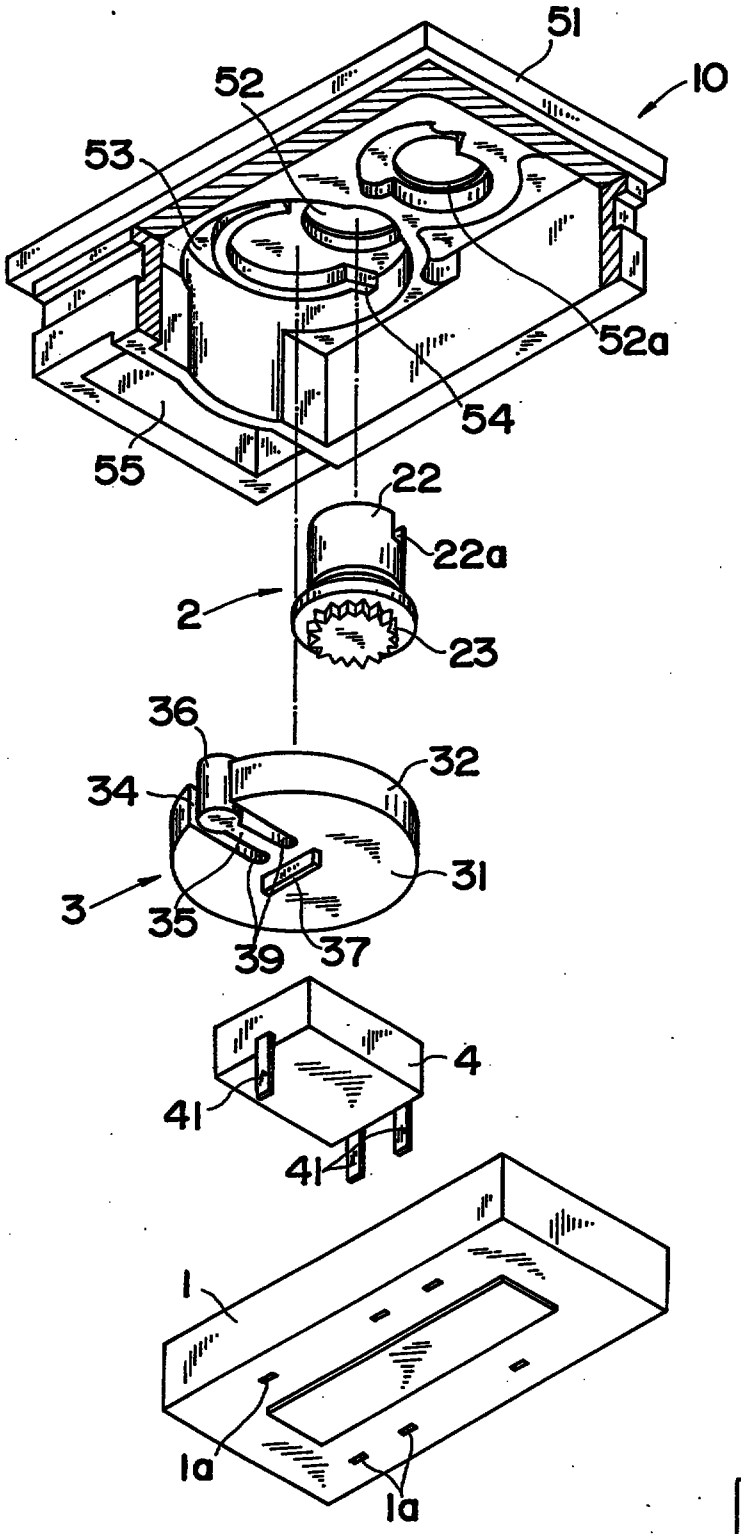

This Sheet Has Been Replaced

REPLACEMENT SHEET
26 SEP 1996

Fig.2

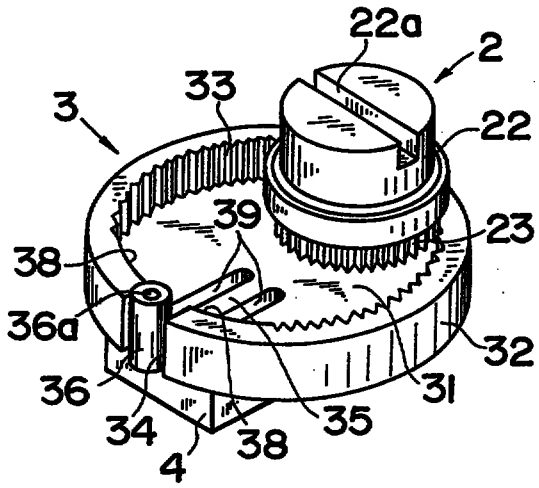

This Sheet Has Been Replaced

REPLACEMENT SHEET
26 SEP 1996

Fig.3

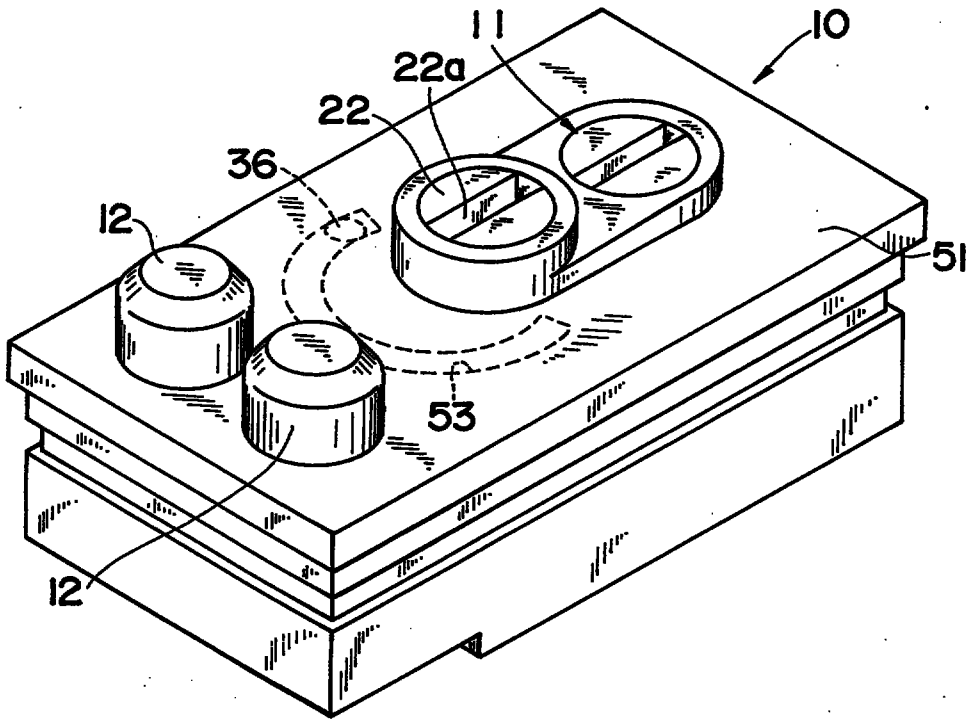

This Sheet Has Been Replaced

REPLACEMENT SHEET
26 SEP 1996

9605155-9 I805

ROTATION OPERATING DEVICE OF VARIABLE RESISTOR

ABSTRACT

A rotation operating device of a variable register has a supporting member (10) rotatably supporting a knob (2) and an intermediate member (3). The upper surface of the supporting member (10) is transparent. The knob (2) is formed with a gear (23) which is engaged with a gear (33) formed in a predetermined range on the inner surface of the peripheral wall (32) of the intermediate member (3). A position indicating portion (36) is located in the notch of the wall (32), projecting more than the upper surface of the wall (32), and is movably fitted into an annular groove (53) of the supporting member (10). The groove (53) has both ends serving as stoppers (54). The position indicating portion (36) is coupled with the bottom surface portion (31) of the intermediate member (3) through a spring member (35).

(Fig. 1)

REPLACEMENT SHEET
04 OCT 1996

9057559 1105

REPLACEMENT SHEETS SG
✓ Description : paged 1 to paged 14
✓ Claim(s) : paged 15 to paged 16
✓ Drawing(s) : paged 1/3 to paged 3/3
Abstract : paged ..... to paged .....
RECEIPT 19/5/25

Substitute sheet - 19 May 2000

TITLE OF THE INVENTION

ROTATION OPERATING DEVICE OF VARIABLE RESISTOR

BACKGROUND OF THE INVENTION

The present invention relates to a rotation operating device for transferring the rotation of a knob to a sliding contact in a variable resistor in which the sliding contact is moved by rotating the knob to thereby continuously adjust or change a resistance value.

Such a kind of variable resistor is used as one of composing parts such as various circuits, devices, and the like and is used to adjust their gains, sensitivities, and the like.

The rotation operating devices of the variable resistor are mainly classified into a single rotating type and a multi rotating type. According to the single rotating type, the resistance value is changed from the minimum value to the maximum value by rotating once (strictly speaking, one rotation, i.e., 360° or less) the knob. On the other hand, according to the multi rotating type, the knob is rotated once or more to change the resistance value from the minimum value to the maximum value.

In the rotation operating device of the single

rotating type, the knob is merely in engagement with the rotating portion of the sliding contact of the variable resistor. Therefore, when the knob is rotated to an angle over a rotatable range, there is a fear such that the variable resistor and the rotation operating device are damaged. In addition, since the rotatable range of the knob is one rotation or less, it is difficult to finely adjust the resistance.

In the rotation operating device of the multi rotating type, a first gear is attached to the knob. On the other hand, a second gear larger than the first gear is attached to the rotating portion of the sliding contact of the variable resistor. The first and second gears are come into engagement with each other. The rotatable range of the knob is decided by the gear ratio of the first and second gears. In the case of the multi rotating type, although the resistance value can be finely adjusted, the first and second gears must be arranged in the lateral direction, so that there is a disadvantage such that the structure increases in size. Moreover, since the knob is rotated a plurality of times and the rotation angle position of the knob does not coincide with the angle position of the sliding contact, there is a drawback such that it is difficult to know the angular position of the sliding

contact from the angle position of the knob.

US-A-3 576 512 discloses a rotation operating device of a variable resistor comprising:

a knob to apply a rotating force from above;

a supporting member having an upper and lower surface and formed with a hole to rotatably support said knob; and

an intermediate member which is rotatably supported by said supporting member to transfer a rotating force applied to the knob to a sliding contact of the variable resistor,

wherein an annular groove having two ends is formed on the lower surface of said supporting member so as to surround said hole, both ends of said annular groove serve as stoppers,

an upper portion of the knob passes through the hole and a first gear is formed in a lower portion of the knob,

said intermediate member has a bottom surface portion and a peripheral wall, a second gear adapted to engage the first gear is formed of the inner surface of the peripheral wall, a stop extends from the upper surface of the peripheral wall and is movably fitted into the annular groove of the supporting member, and the bottom surface portion is in engagement with the sliding contact of the variable resistor supported by the supporting member.

SUMMARY OF THE INVENTION

It is an object of the present invention to provide a rotation operating device of the multi rotating type in which the device can be miniaturized, the angle position of a sliding contact can be known, and even if a knob is rotated to an angle over its limit rotating range, the device is hard to be broken.

A rotation operating device of a variable resistor according to the present invention is as defined in claim 1.

According to the present invention, the second gear is formed on the inner surface of the peripheral wall of the intermediate member which is in engagement with the rotating portion of the sliding contact of the variable resistor. The first gear formed in the lower portion of the knob is arranged inside of the peripheral wall and is in engagement with the second gear. Therefore, the knob, intermediate member, and variable resistor can be arranged in the vertical direction and the device can be miniaturized.

Since the device is of the multi rotating type, even if the rotating angle of the knob is large, a change in resistance value is relatively small and

the resistance value can be finely adjusted.

Further, the rotating angle of the rotating portion of the sliding contact of the variable resistor and the rotating angle of the intermediate member certainly coincide. The rotating angle position of the intermediate member is indicated by the position of the position indicating portion. The position indicating portion can be seen by the eyes through the transparent or translucent upper surface member of the supporting member. Thus, the position of the sliding contact of the variable resistor, that is, the resistance value can be clearly known.

The rotating range of the knob is determined by the positions of the stoppers of both ends of the annular groove. In other words, the positions at which the position indicating portion has come into contact with the stoppers correspond to the maximum and minimum values of the resistance value. The second gear is formed in a predetermined range on the inner surface of the peripheral wall of the intermediate member. At the position in which the position indicating portion has come into contact with the stoppers, the first gear reaches the edge portion of a forming range of the second gear. When the knob is further rotated to an angle over the forming range, the first gear is in

contact with the portion (inner surface of the

peripheral wall) in which the second gear is not formed. Therefore, even if an operator tries to rotate the knob to an angle over the limit angle position, the knob will be raced and the intermediate member will not be rotated. Consequently, the breakage of the variable resistor and the like can be prevented. Since the position indicating portion is coupled with the intermediate member through the spring member, the outer force which acts on the intermediate member when the position indicating portion abuts on the stopper is absorbed by the spring member. When no outer force is applied to the intermediate member due to the racing of the knob, the intermediate member is returned to the position at which the position indicating portion has substantially come into contact with the stopper by the recovery force of the spring member.

BRIEF DESCRIPTION OF THE DRAWINGS

Fig. 1 is an exploded perspective view of a rotation operating device of the multi rotating type according to an embodiment of the present invention;

Fig. 2 is an enlarged perspective view of the main section showing an engaging state of a gear of a shaft and a gear of an indicator; and

Fig. 3 is an external perspective view showing

a part of a photoelectric switch to which the multi rotating type device of the embodiment is installed.

DETAILED DESCRIPTION OF THE PREFERRED EMBODIMENT

Fig. 3 is an external perspective view showing a part of a photoelectric switch to which a variable resistor having a rotation operating device of the multi rotating type according to an embodiment of the present invention is installed for sensitivity control.

As conventionally well-known, the photoelectric switch is constructed such that light emitting and photo sensitive elements (not shown), a variable resistor for sensitivity control (which will be explained hereinlater), a mode change-over switch 11, and indicator lamps (red LED, green LED) 12 to check the operation are assembled in a casing 10.

A variable resistor 4 for sensitivity control is fixed to a holder 1 by inserting its three terminals 41 into terminal holes 1a of the holder 1. The variable resistor 4 is of the type in which its sliding contact (not shown) circularly moves (or rotates) to thereby continuously change a resistance value between the sliding contact and one terminal. The variable resistor 4 has a rotating portion (not shown) to rotatably support the sliding contact.

The rotation operating device to circularly move (or rotate) the sliding contact through the rotating portion of the variable resistor 4 includes the casing 10, a shaft portion 2, and an indicator 3.

The casing 10 has a box-like shape whose lower surface is opened. A transparent or translucent upper surface portion 51 is provided in the upper portion of the casing 10. Through holes 52 and 52a to rotatably support the shaft 2 and a shaft of the mode change-over switch 11 are opened in the surface of the upper surface portion 51. Further, an annular groove 53 is formed on the inner surface of the upper surface portion 51 on the outer peripheral side of the through hole 52.

The annular groove 53 is not formed as a whole circle (360°) but has both ends. Stairway-like stoppers 54 are formed at both ends of the annular groove 53. A position indicating portion 36 of the indicator 3 is movably fitted into the annular groove 53 and is guided. A partition enclosing chamber 55 to attach the indicator lamps 12 is formed in one end portion (on the side opposite to the through hole 52a of the mode change-over switch shaft) of the casing 10.

The upper portion of the shaft 2 is used as an operating knob portion 22 and a small gear 23 is formed in the lower portion of the shaft 2. The operating

knob portion 22 is rotatably fitted into the through hole 52 and faces the outside of the casing 10 (transparent upper surface portion 51). A rotation operating groove 22a is formed on the upper surface of the knob portion 22. The knob portion 22 is rotated by inserting the tip of a driver or the like into the groove 22a. The small gear 23 in the lower portion is come into engagement with an inner peripheral gear 33 of the indicator 3, which will be explained hereinlater.

The indicator 3 comprises: a disk-shaped bottom portion 31; a peripheral wall 32 which rises like a ring on the outer periphery of the disk-shaped bottom portion 31; the gear 33 (refer to Fig. 2) formed on the inner peripheral surface of the peripheral wall 32; and the position indicating portion 36 which is arranged in a notch 34 of the peripheral wall 32 and is communicated with the bottom portion 31 through a leaf spring portion 35.

As shown in Fig. 2, the disk-shaped bottom portion 31 has a diameter larger than that of the shaft 2. The ring-shaped peripheral wall 32 is projected on the outer periphery of the bottom portion 31. The notch 34 is formed at a proper position of the ring-shaped peripheral wall 32. The position indicating portion 36 is arranged in the notch 34. The gear 33 is formed

on the inner peripheral surface of the peripheral wall 32 excluding a portion 38 of a predetermined angle range, that is, a predetermined length from the edge on the side of the notch 34. The portion 38 in which the gear 33 is not formed is provided for allowing the gear 23 of the shaft 2 to race in the region out of the range from the maximum resistance value to the minimum resistance value of the variable resistor 4.

Two notched grooves 39 which are arranged in parallel at a predetermined distance are formed on the disk-shaped bottom portion 31 in correspondence to the notch 34. A portion (member) between the notched grooves 39 is used as the leaf spring portion 35. The position indicating portion 36 is integrally coupled with the front edge of the leaf spring portion 35. The position indicating portion 36 has a cylindrical shape and its height is set to be higher than the peripheral wall 32. The upper portion of the cylindrical body 36 is fitted into the annular groove 53. In this state, for instance, a black display color 36a of the upper surface of the position indicating portion (cylindrical body) 36 can be seen from the outside through the transparent or translucent upper surface portion 51.

A circular concave portion 57 which is de-centered

from the hole 52 is formed on the inner surface of the casing 10. The indicator 3 is fitted into the concave portion 57 and is rotatably supported.

An engaging projection 37 is formed at the center of the lower surface of the bottom portion 31 of the indicator 3 and is fitted into the rotating portion of the variable resistor 4. Thus, the rotating force of the indicator 3 is transferred to the rotating portion of the variable resistor 4 so that the sliding contact circularly moves (or rotates) and the resistance value of the variable resistor 4 changes.

The number of rotation times of the knob portion 22 which is necessary to change the resistance value of the variable resistor 4 from the maximum value to the minimum value is determined by the gear ratio of the gears 23 and 33. The gear ratio is decided such that when the knob portion 22 is rotated once or more, the resistance value changes within its adjusting range. On the other hand, the gear ratio is set in a manner such that when the resistance value becomes the maximum value, the position indicating portion 36 abuts on one of the stoppers 54, and when the resistance value becomes the minimum value, the position indicating portion 36 is come into contact with the other stopper 54.

For instance, when the sensitivity of the

photoelectric switch is adjusted by the rotation operating device of the multi rotating type having such a structure, the knob portion 22 is rotated. Thus, the indicator 3 having the gear 33 which is in engagement with the gear 23 of the shaft 2 rotates. That is, the resistance value of the variable resistor 4 is finely adjusted.

When the indicator 3 rotates, the movement in the annular groove 53 of the position indicating portion (color portion 36a for display) 36 can be seen from the transparent or translucent upper surface portion 51 of the casing 10. Now, assuming that the knob portion 22 was rotated a few times and the resistance value of the variable resistor 4 has reached the maximum value, the upper portion of the position indicating portion 36 abuts on the stopper 54 as one edge of the annular groove 53. Due to this, the stopper 54 blocks the further forward rotating operation of the indicator 3 (position indicating portion 36). In this state, a part of the gear 23 of the shaft 2 corresponds to the portion 38 in which the gear on the inner peripheral surface of the peripheral wall 32 is not formed. When the knob portion 22 is further forwardly rotated in such a state, the indicator 3 intends to slightly rotate. At this time, the leaf spring portion 35 of the position indicating portion 36 is deformed and the spring force is accumulated.

At the same time, the gear 23 of the shaft 2 passes over the gear 33 of the indicator 3 which is in engagement with the gear 23. Namely, in this state, since the portion 38 in which the gear of the indicator 3 is not formed corresponds to a part of the shaft gear 23, the gear 23 of the shaft 2 races. When the gear 23 races, the indicator 3 is returned to the original position by the spring force of the leaf spring portion 35 and the gears 23 and 33 are again come into engagement with each other. When the knob is rotated forwardly (the same direction) in this manner, since the racing operation of the shaft 2 (gear 23) is repeated, the variable resistor 4 is not damaged. On the contrary, when the knob portion 22 of the shaft 2 is reversely rotated, the indicator 3 reversely rotates by the engaged gears (the gear 23 of the shaft and the gear 33 of the indicator), so that the sliding contact of the variable resistor 4 is moved in such a direction that the resistance value becomes the minimum value. After reaching the position of the minimum resistance value, the similar racing operation is executed.

Since the invention has been constructed as mentioned above, the shaft having the knob portion, the gear of the indicator which is come into engagement with the gear of the shaft, and the variable resistor to which the indicator is fitted and attached are arranged so as

to be vertically overlaid. Therefore, the device can be miniaturized as compared with the conventional multi rotating type. On the other hand, the moving state of the position indicating portion by the rotation of the operation knob portion can be seen through the transparent or translucent upper surface portion of the casing from the outside and the degree of adjustment of the resistance value of the variable resistor can be seen by the eyes. Further, in the case where the knob portion is rotated to an angle over the maximum or minimum value of the resistance value of the variable resistor, the knob portion (shaft) is raced, so that the varaible resistor is not broken. As mentioned above, various excellent advantages are obtained according to the invention.

* C L M S *

Claims

1. A rotation operating device of a variable resistor comprising:

a knob (2, 22) to apply a rotating force from above;

a supporting member (1, 10) formed with a hole (52) to rotatably support said knob; and

an intermediate member (3) which is rotatably supported by said supporting member to transfer a rotating force applied to the knob to a sliding contact of the variable resistor (4),

said supporting member comprising an upper surface member (51) which is transparent or translucent and comprises an upper and a lower surface, an annular groove (53) being formed in the lower surface of said upper surface member so as to surround said hole, said annular groove having two ends serving as stoppers (54),

an upper portion of the knob passing through the hole and a first gear (23) being formed in a lower portion of the knob,

said intermediate member having a bottom surface portion (31) and a peripheral wall (32), a notch (39, 39) being formed in a part of the peripheral wall and in the bottom surface portion, a second gear (33) adapted to engage the first gear being formed in a predetermined range of the inner surface of the peripheral wall, a position indicating portion (36) being located in the notch of the peripheral wall at the upper surface thereof, the position indicating portion being connected to the bottom surface portion through a spring member (35) and being movably fitted into said annular groove of said upper surface member (51) of the supporting member (10), and the bottom surface portion (31) being in engagement (37) with the sliding contact of the variable resistor supported by said supporting member,

the rotating range of the knob being defined by those rotational positions of the intermediate member (3) in which said position indicating portion contacts said stoppers (54).

2. A device according to claim 1, wherein a color portion is formed on the upper surface of the position indicating portion (36) so as to be seen from above through the transparent or translucent upper surface member (51) of the supporting member.

Fig. 1

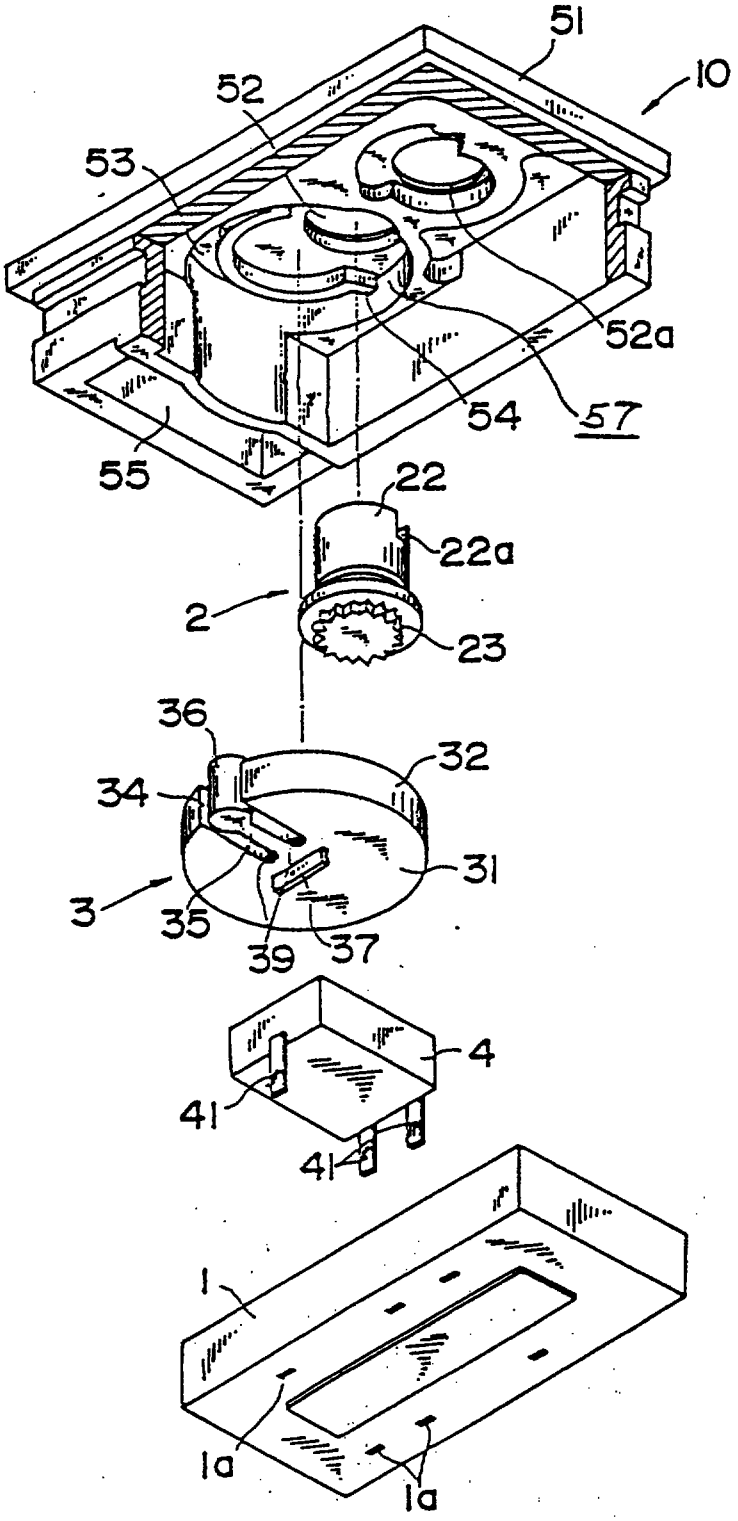
51
10
52
53
52a
54
57
55
22
22a
2
23
36
32
34
31
3
35
39
37
4
41
41
1
1a
1a

Fig.2

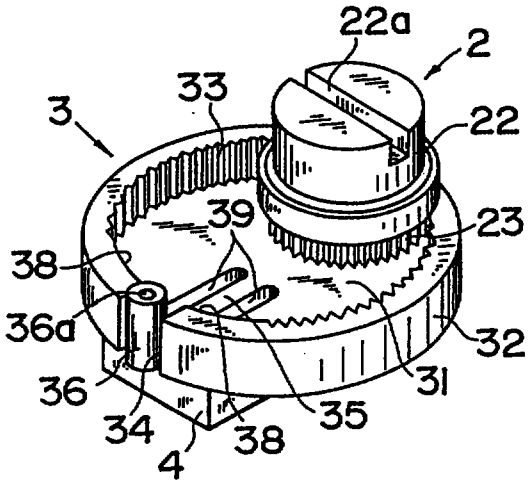

Fig.3

