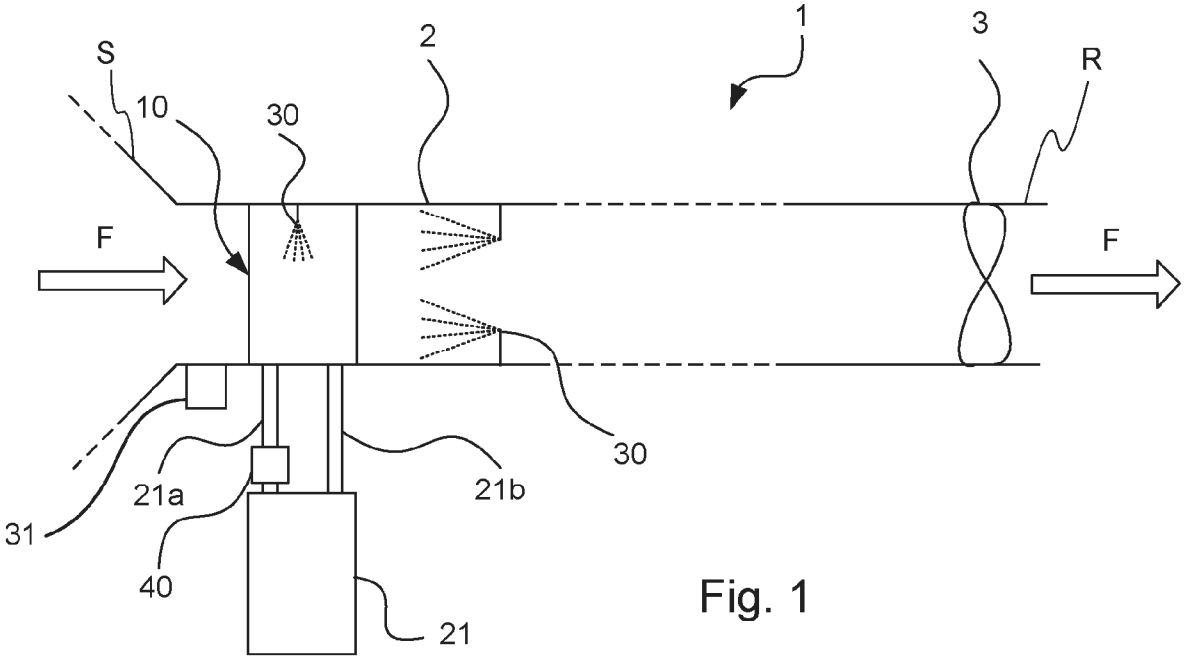

Fig. 1

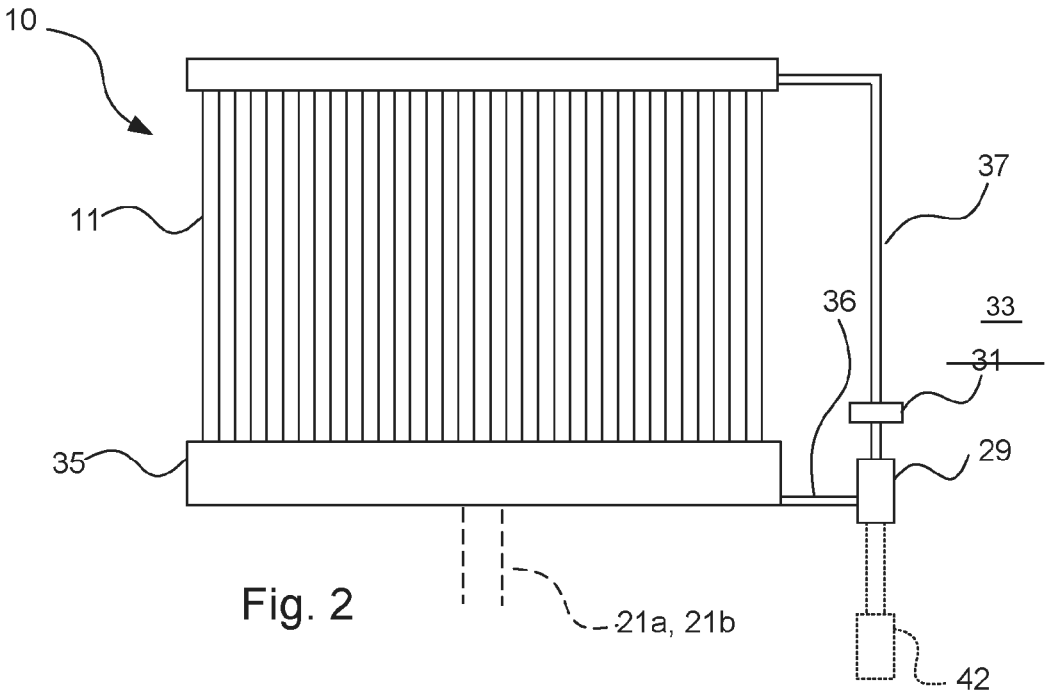

Fig. 2

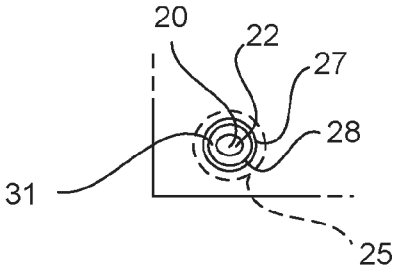

Fig. 3

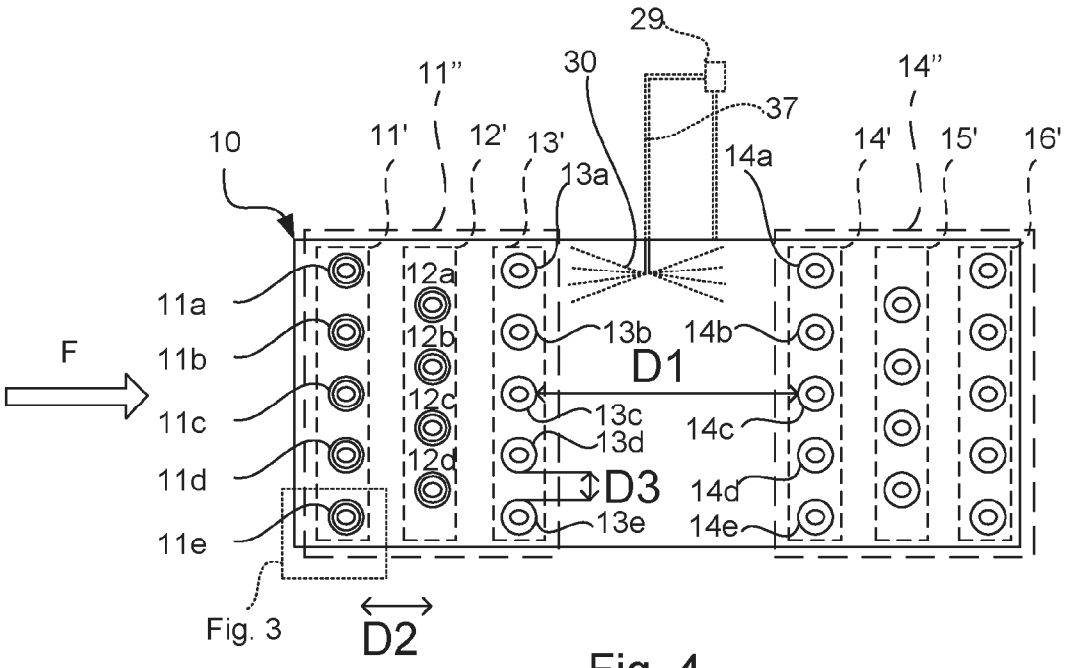
29
11''
30
14''
37
10
11'
12'
13'
13a
14a
14'
15'
16'
11a
12a
F
11b
12b
13b
14b
D1
12c
13c
14c
11c
13d
11d
12d
D3
14d
13e
14e
11e
Fig. 3
D2

Fig. 4

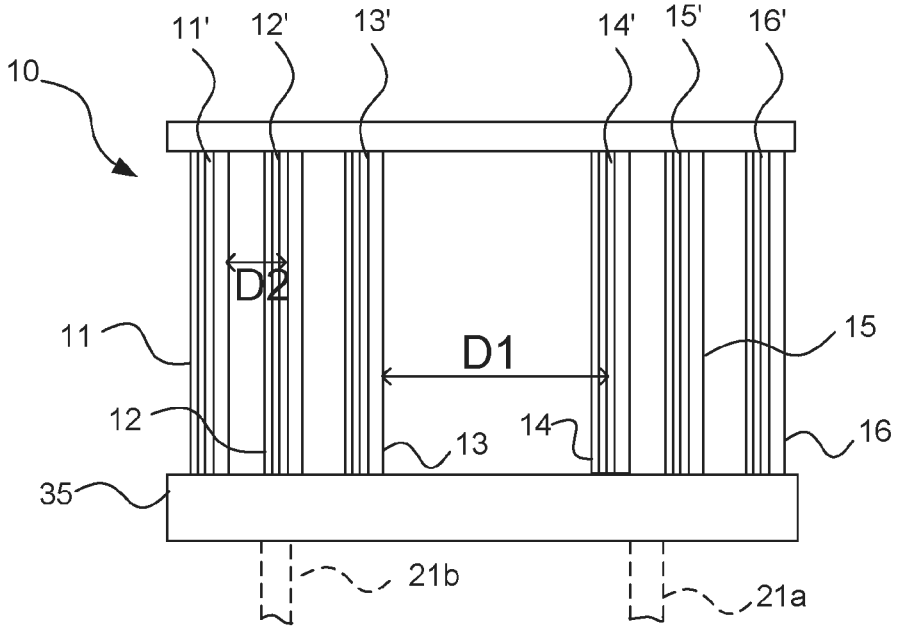
11'
12'
13'
14'
15'
16'
10
D2
11
D1
15
12
13
14
16
35
21b
21a

Fig. 5

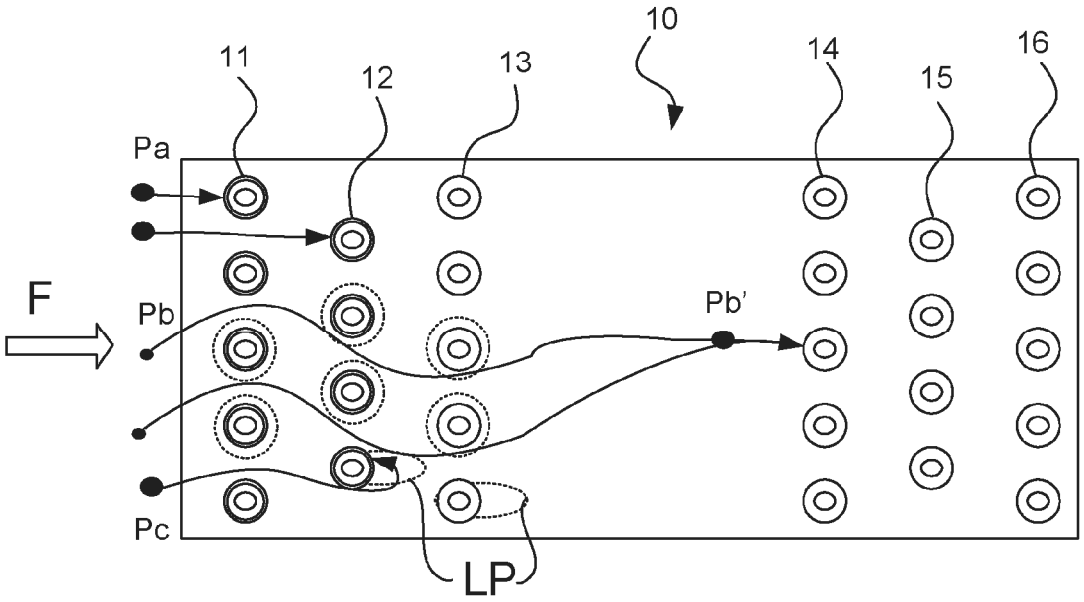
10
11
12
13
14
15
16
Pa
F
Pb
Pb'
Pc
LP

Fig. 6

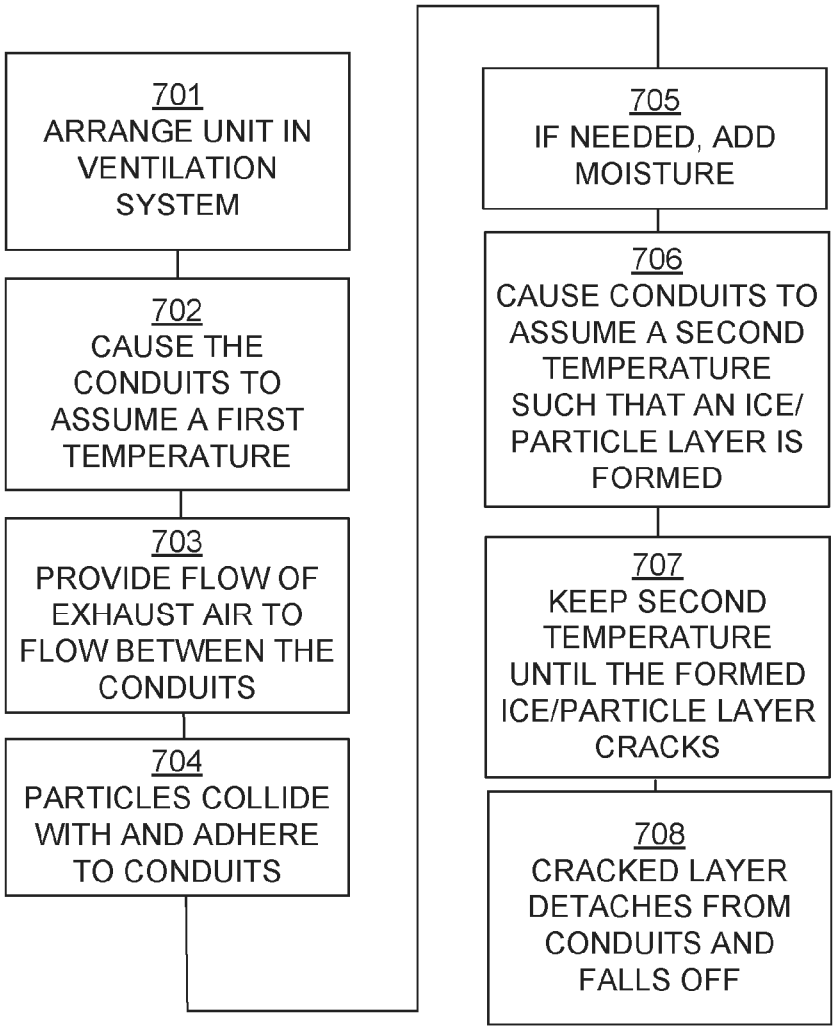
701
ARRANGE UNIT IN VENTILATION SYSTEM
702
CAUSE THE CONDUITS TO ASSUME A FIRST TEMPERATURE
703
PROVIDE FLOW OF EXHAUST AIR TO FLOW BETWEEN THE CONDUITS
704
PARTICLES COLLIDE WITH AND ADHERE TO CONDUITS
705
IF NEEDED, ADD MOISTURE
706
CAUSE CONDUITS TO ASSUME A SECOND TEMPERATURE SUCH THAT AN ICE/ PARTICLE LAYER IS FORMED
707
KEEP SECOND TEMPERATURE UNTIL THE FORMED ICE/PARTICLE LAYER CRACKS
708
CRACKED LAYER DETACHES FROM CONDUITS AND FALLS OFF

Fig. 7

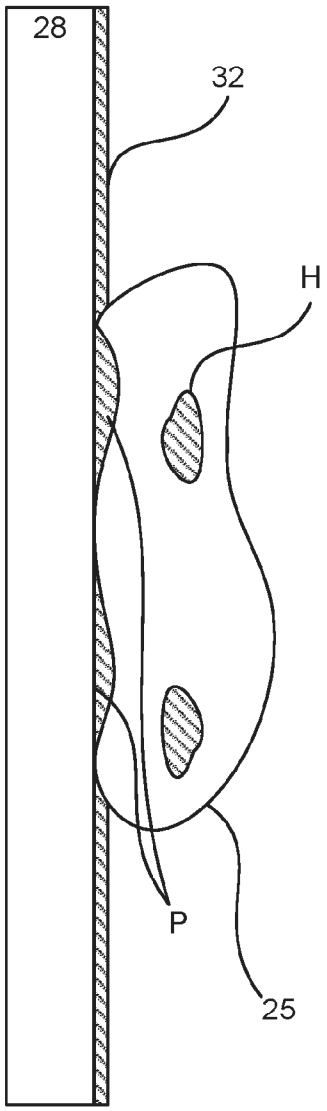

Fig. 8A

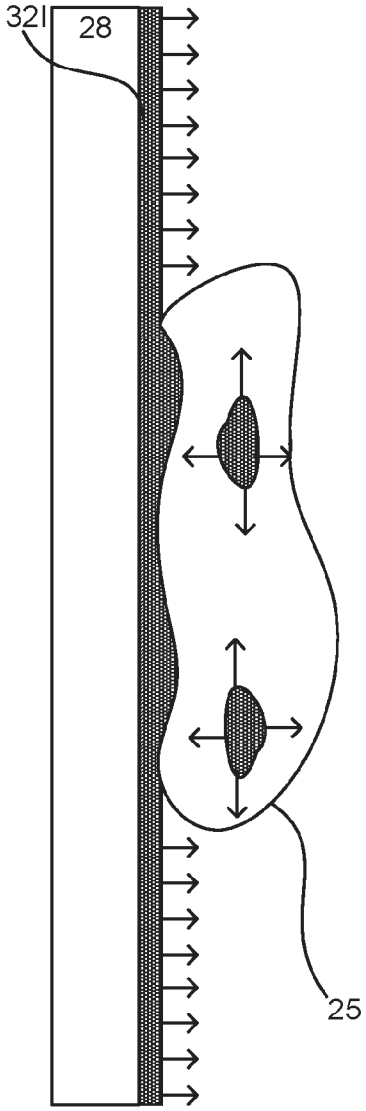

Fig. 8B

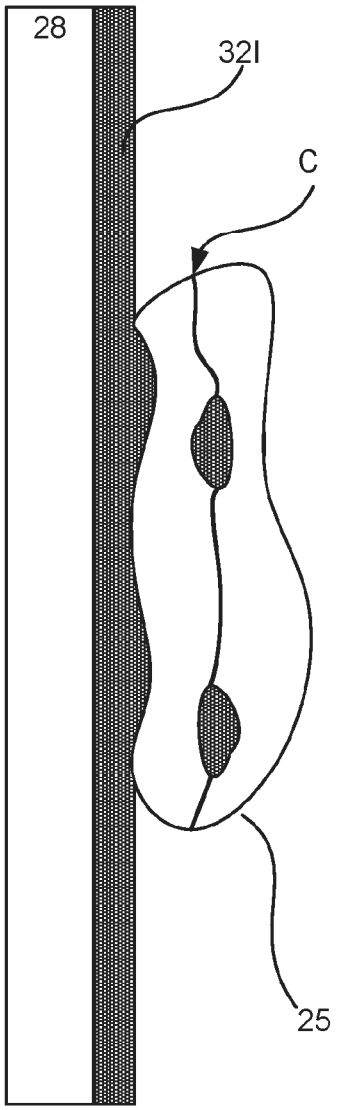

Fig. 8C

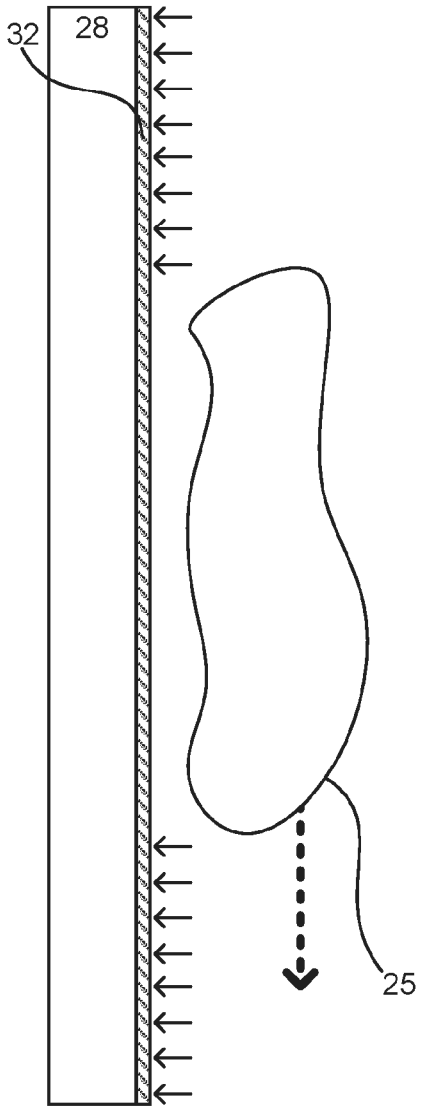

Fig. 8D

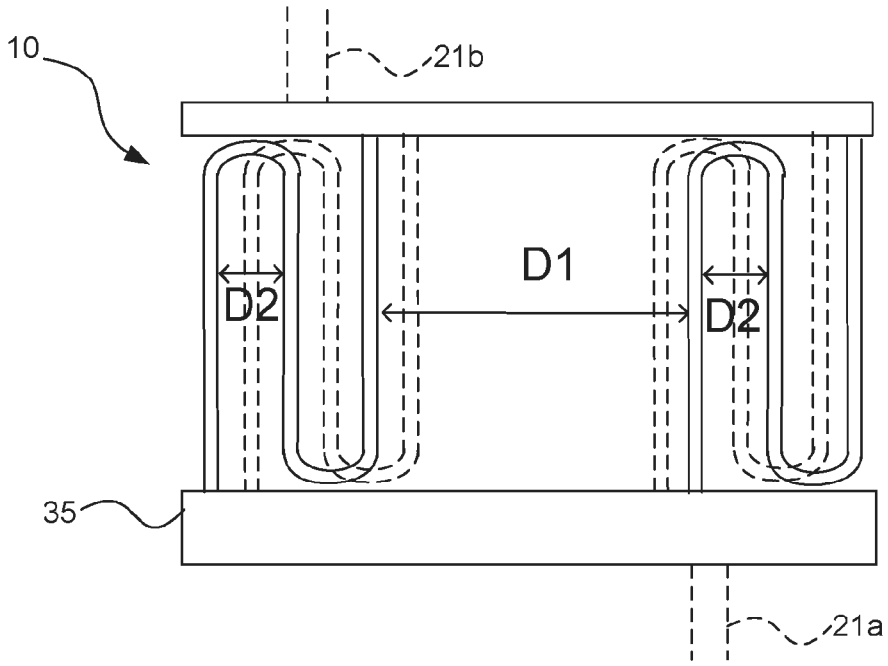

Fig. 9