[FIG. 1]

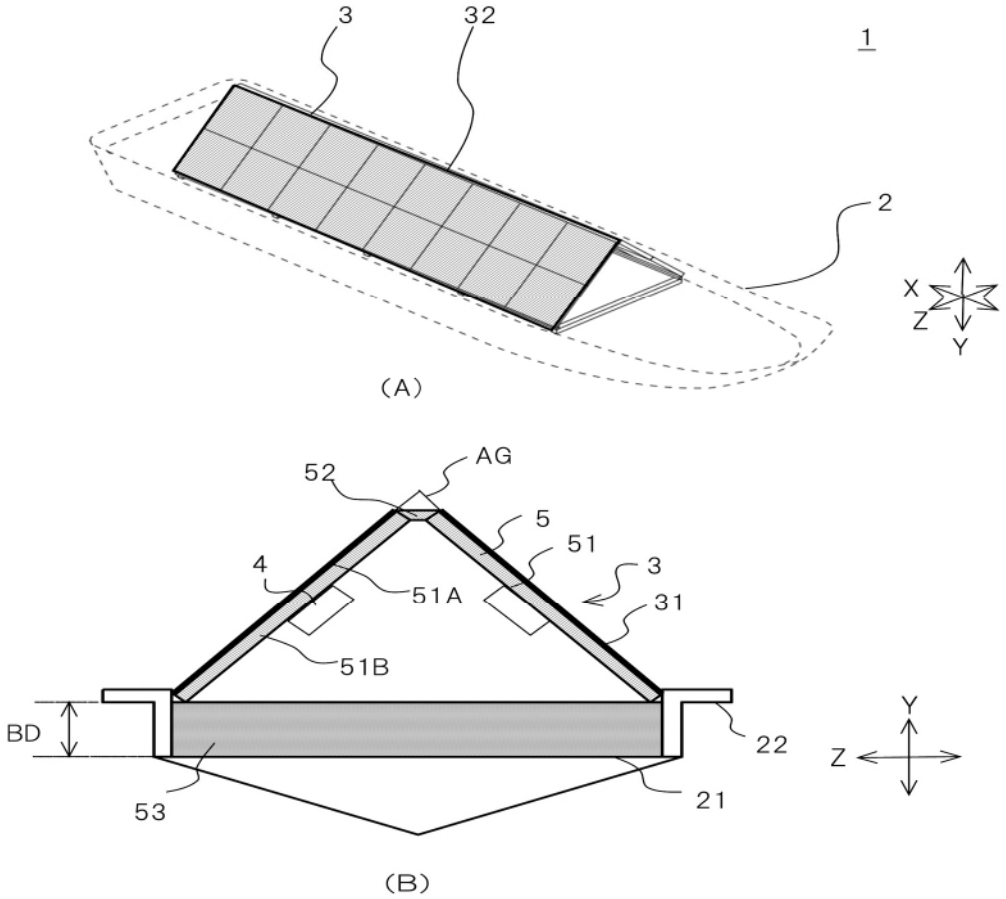
3
32
1
2
X
Z
Y
(A)
AG
52
5
51
4
3
51A
31
51B
BD
22
Y
Z
53
21
(B)

[FIG. 2]

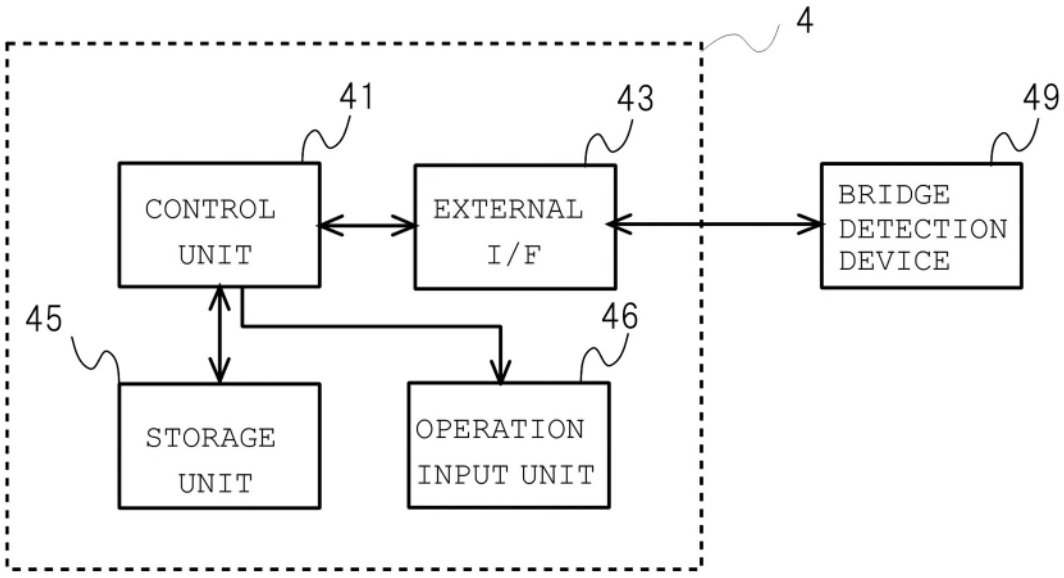
4
41
43
49
CONTROL UNIT
EXTERNAL I/F
BRIDGE DETECTION DEVICE
45
46
STORAGE UNIT
OPERATION INPUT UNIT

[FIG. 3]

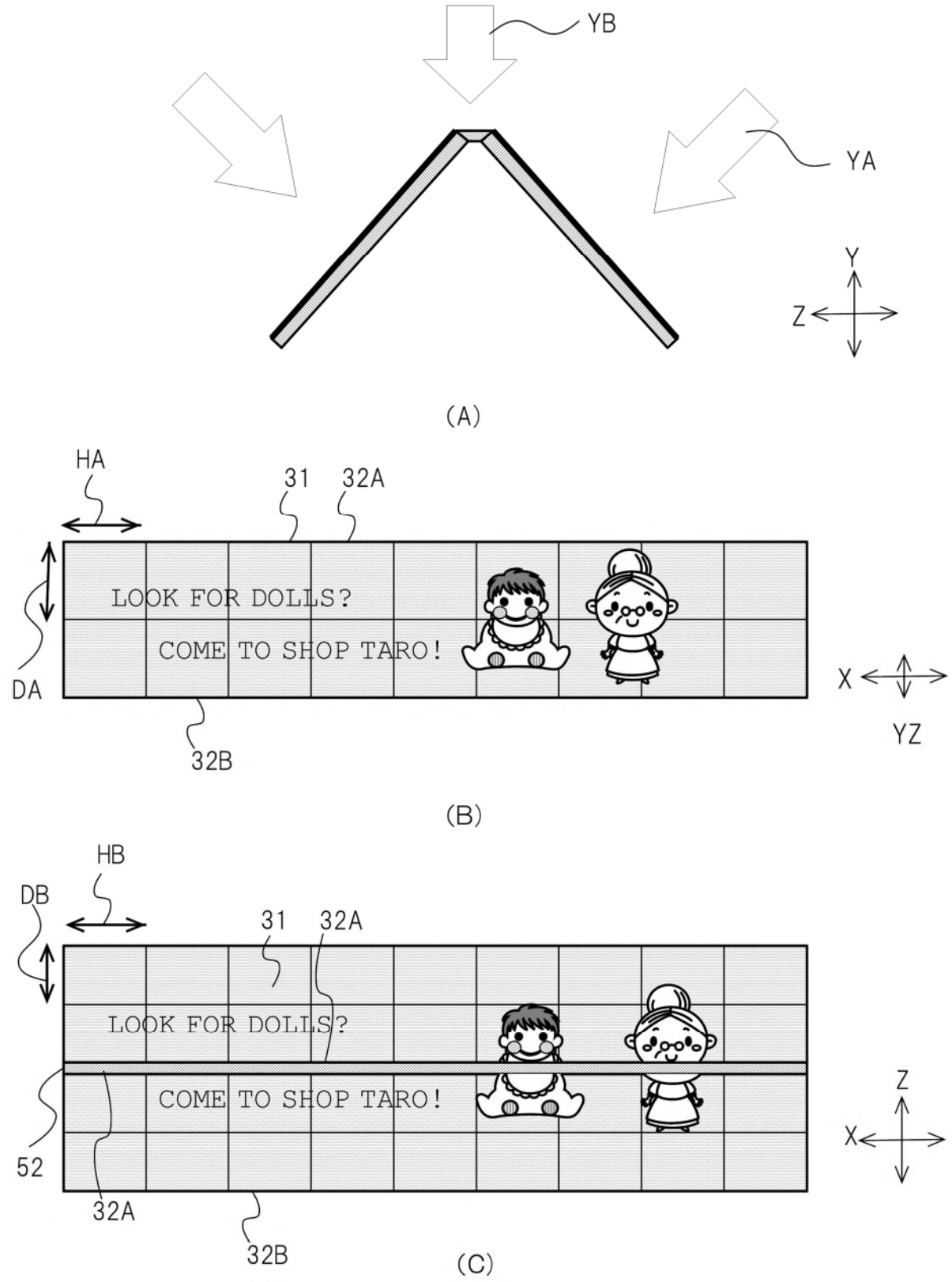
YB
YA
Y
Z
(A)
HA
31
32A
LOOK FOR DOLLS?
COME TO SHOP TARO!
DA
32B
X
YZ
(B)
HB
DB
31
32A
LOOK FOR DOLLS?
COME TO SHOP TARO!
52
32A
32B
Z
X
(C)

[FIG. 4]

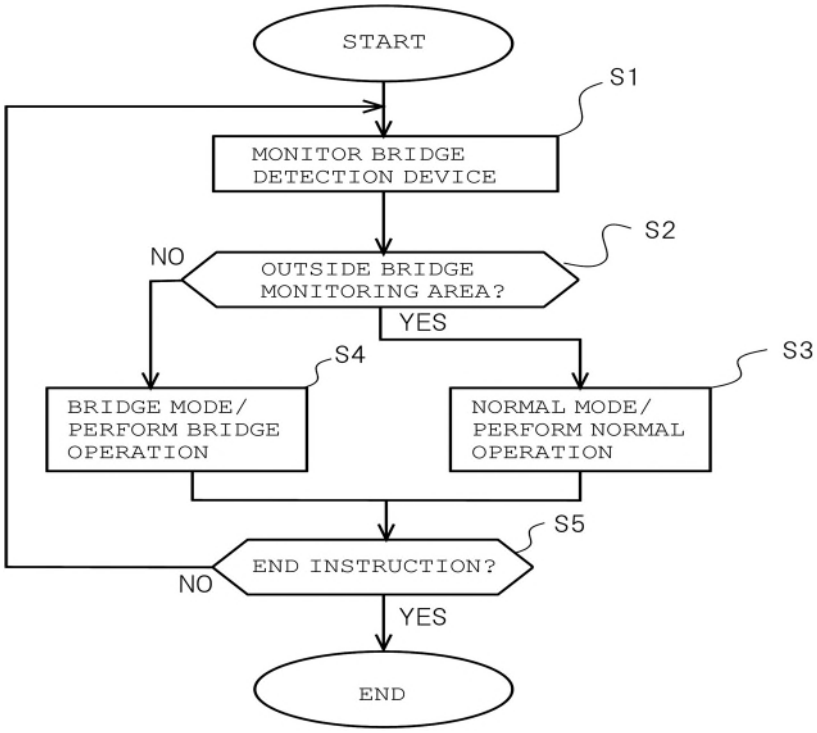
START
S1
MONITOR BRIDGE DETECTION DEVICE
S2
NO
OUTSIDE BRIDGE MONITORING AREA?
YES
S4
S3
BRIDGE MODE/ PERFORM BRIDGE OPERATION
NORMAL MODE/ PERFORM NORMAL OPERATION
S5
END INSTRUCTION?
NO
YES
END

[FIG. 5]

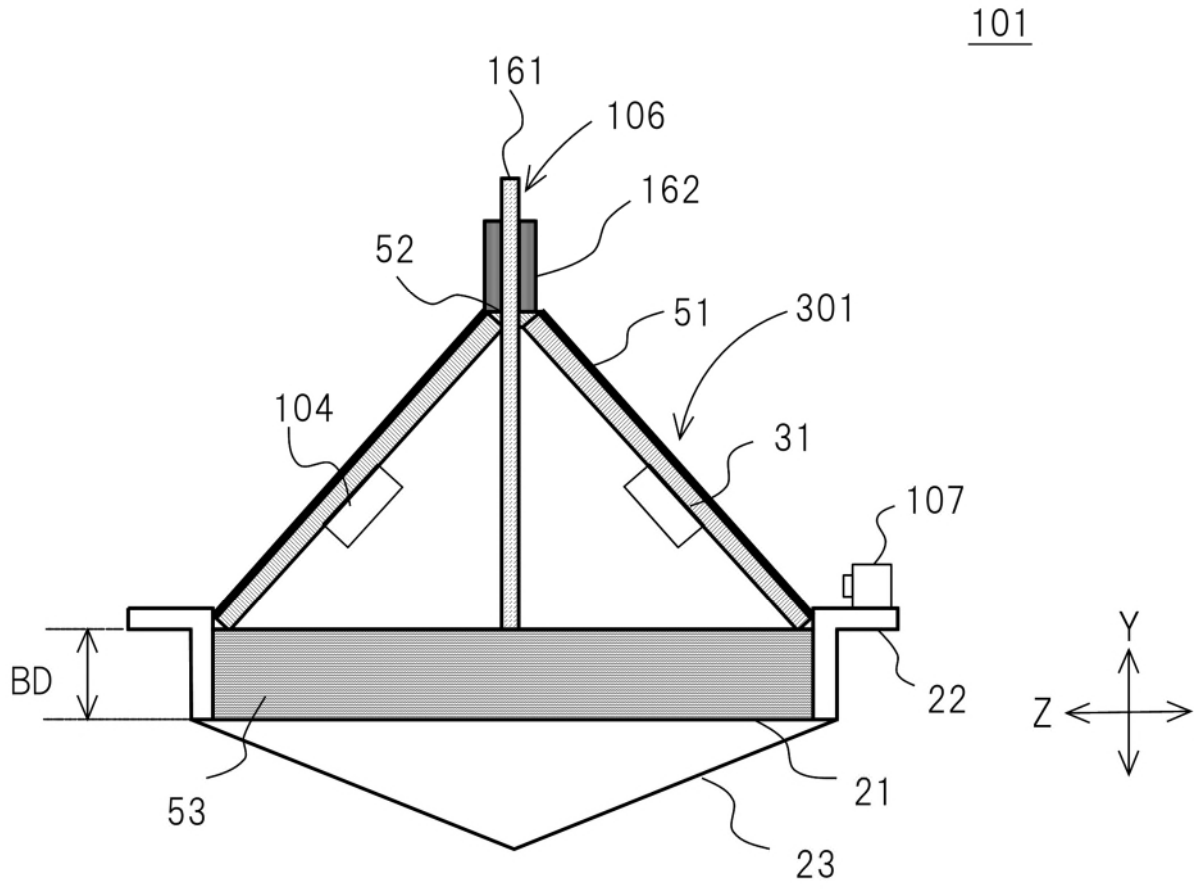
101
161
106
162
52
51
301
104
31
107
BD
22
53
21
23
Y
Z

[FIG. 6]

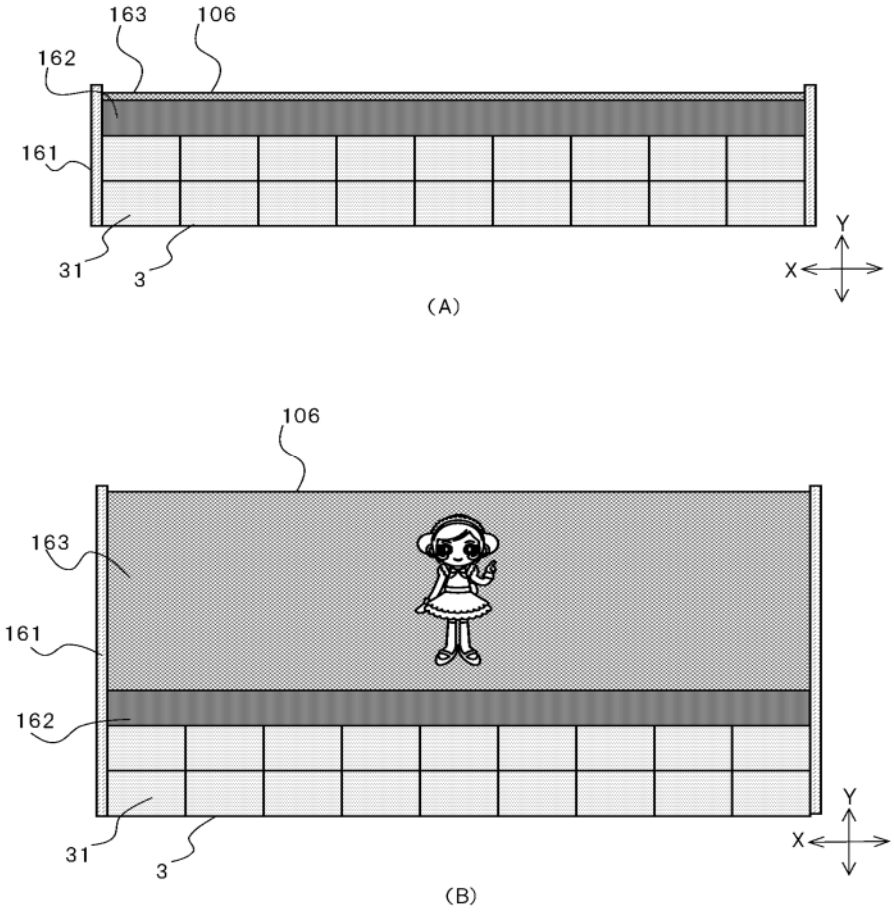


[FIG. 7]

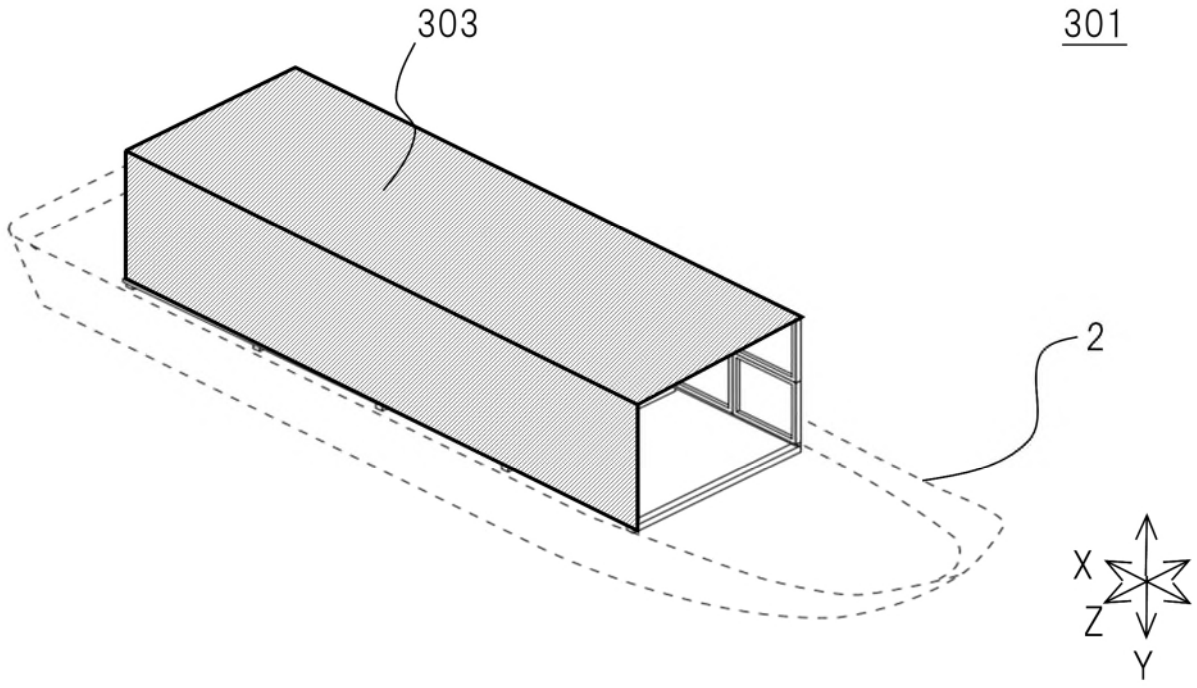

[FIG. 8]

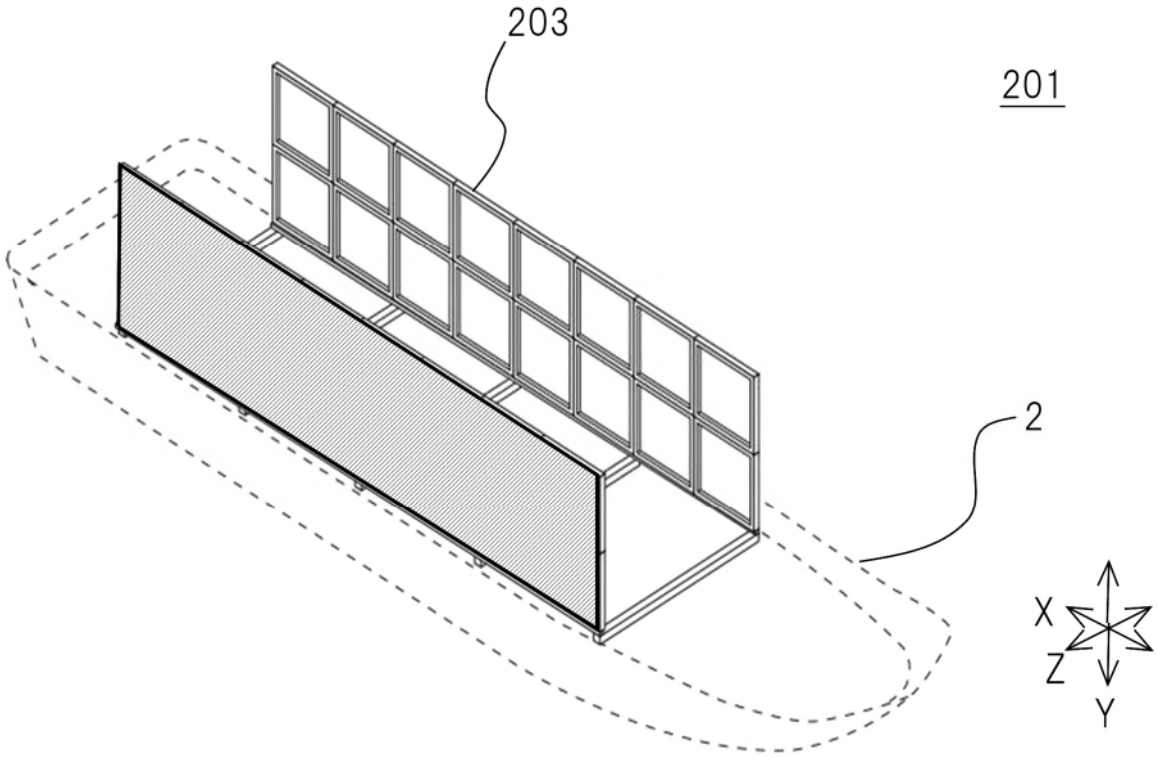


[FIG. 9]

