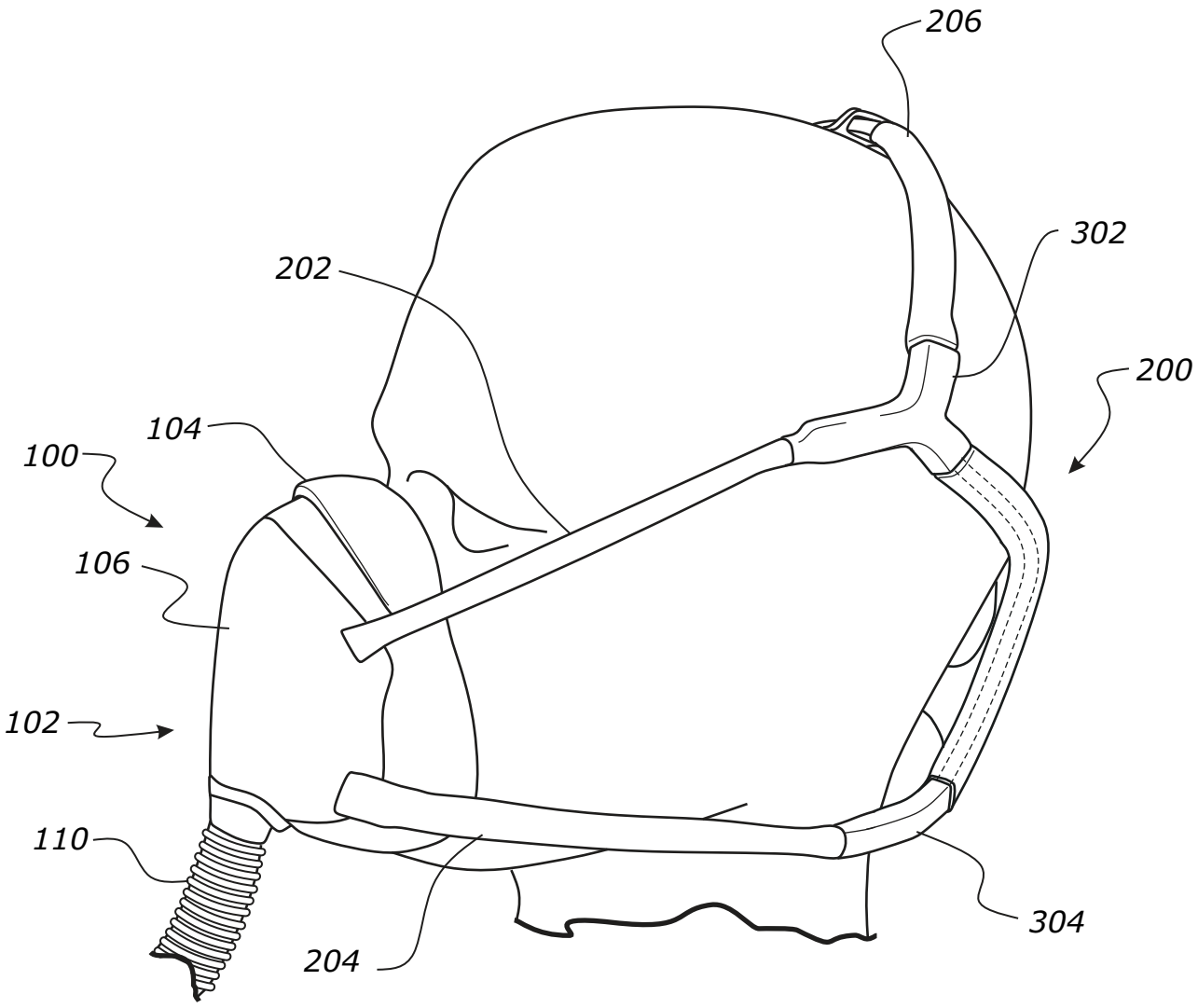

FIG. 1

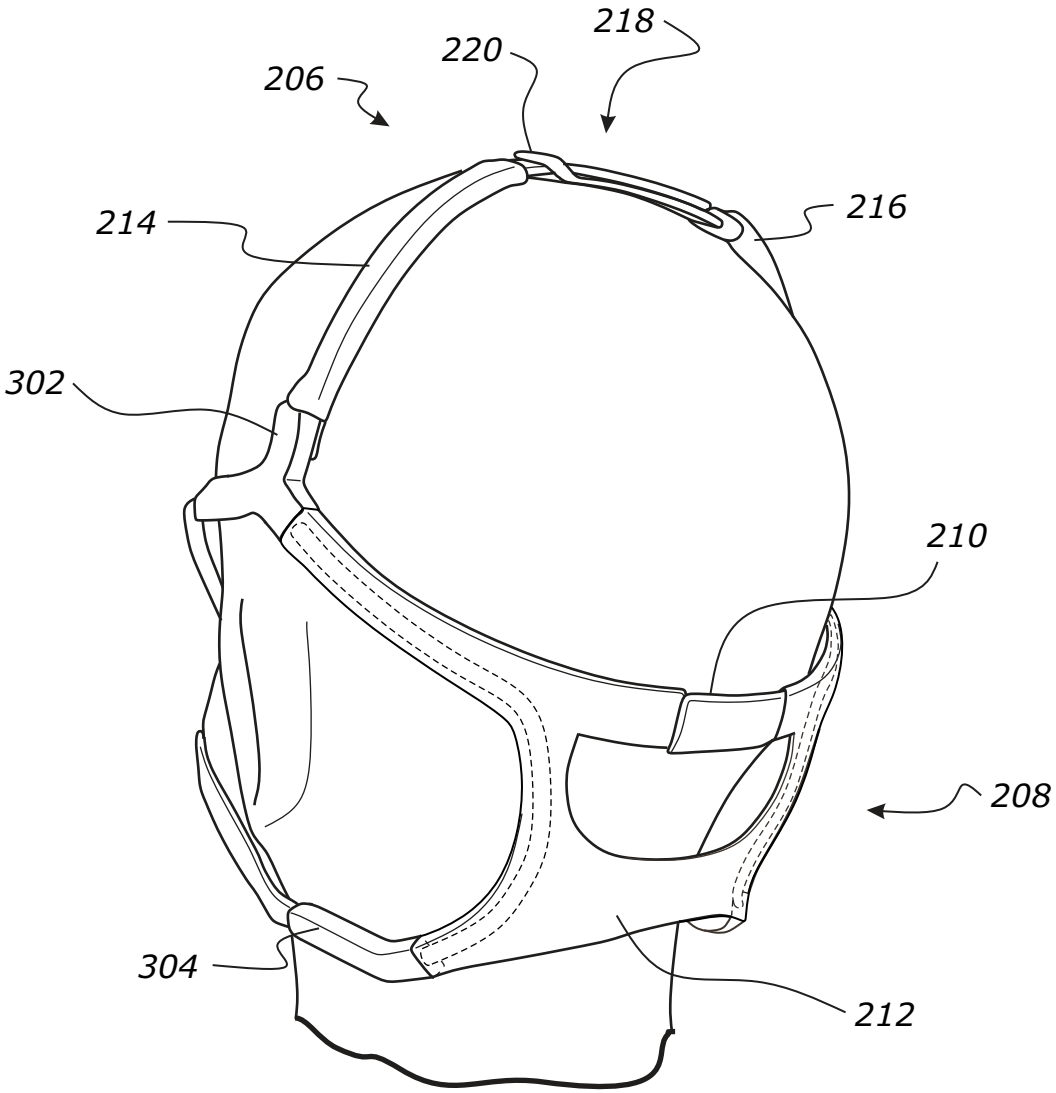

FIG. 2

FIG. 3A

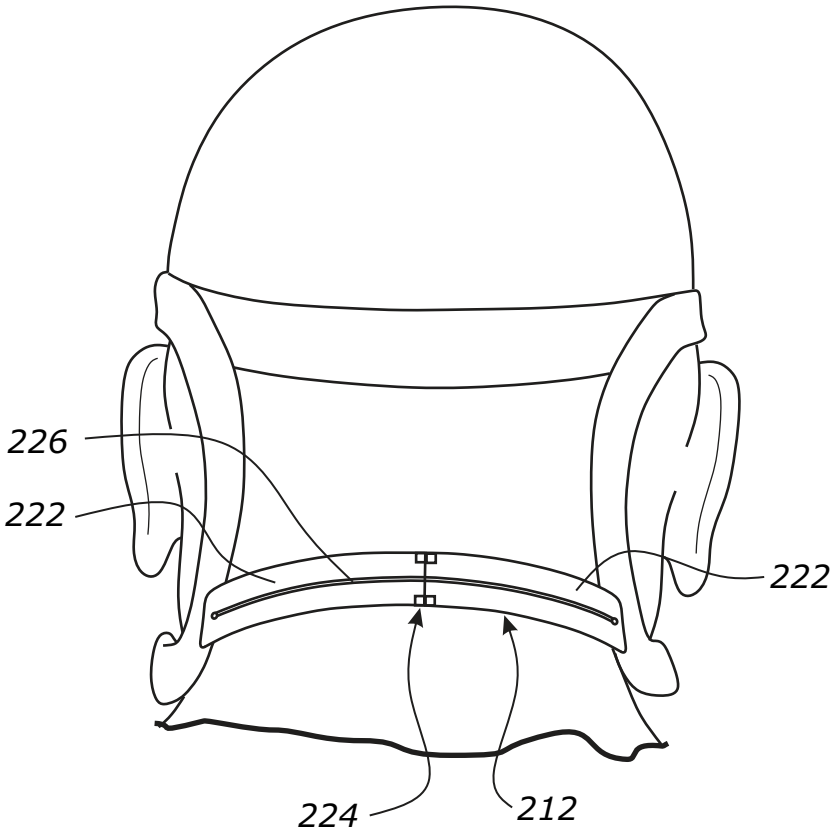

FIG. 3B

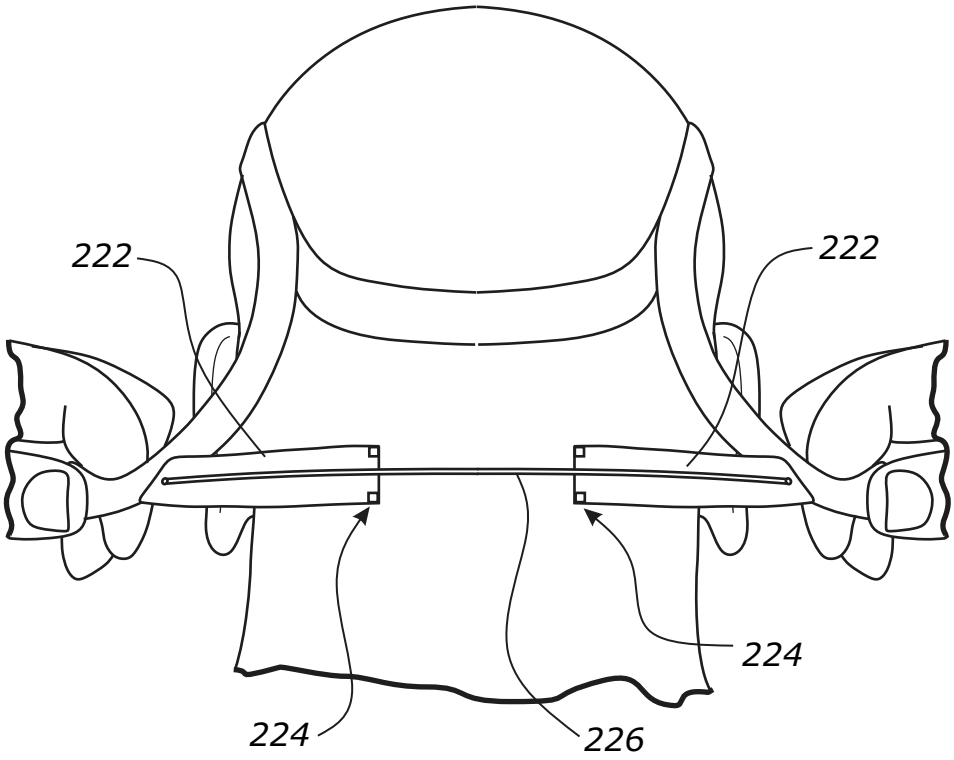

FIG. 4A

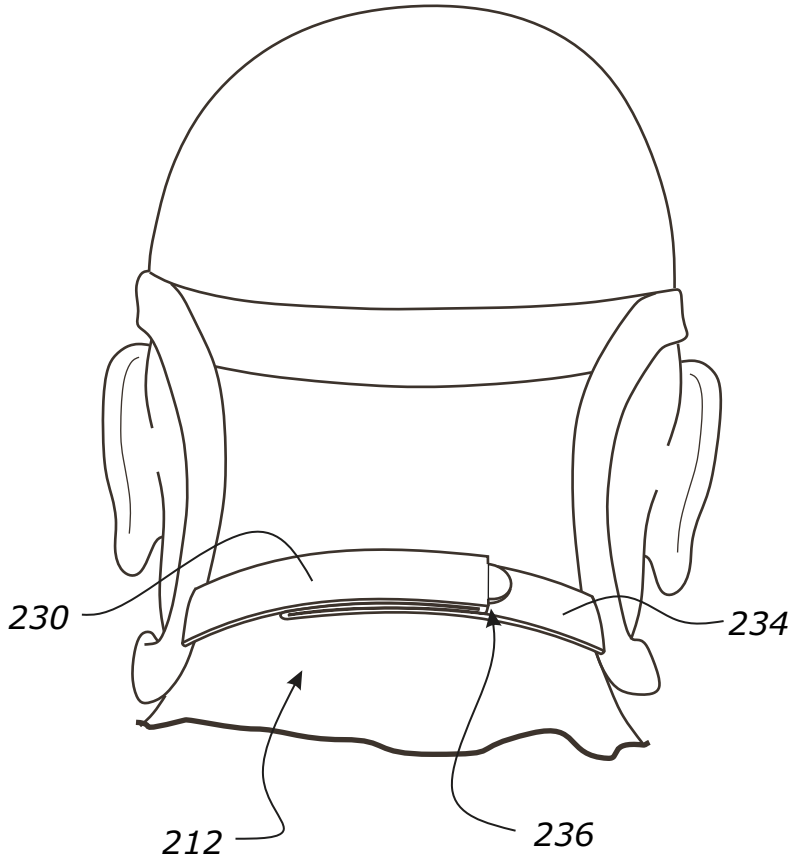

FIG. 4B

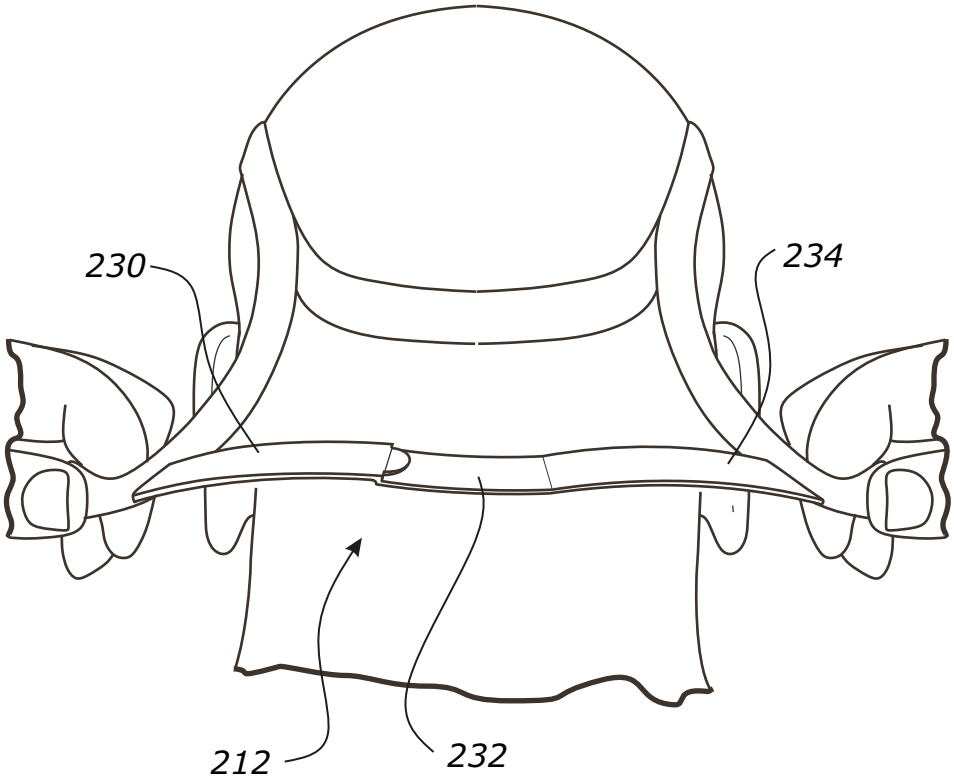

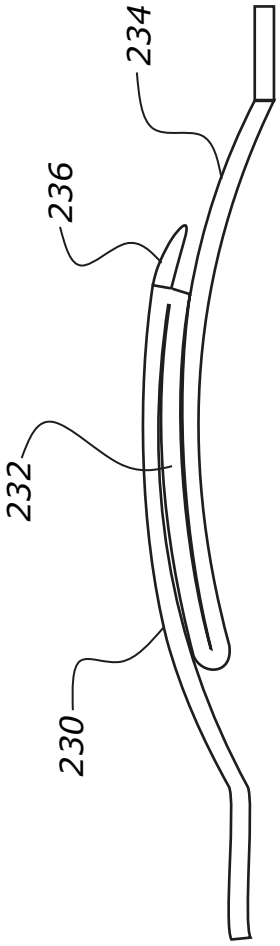

FIG. 5A

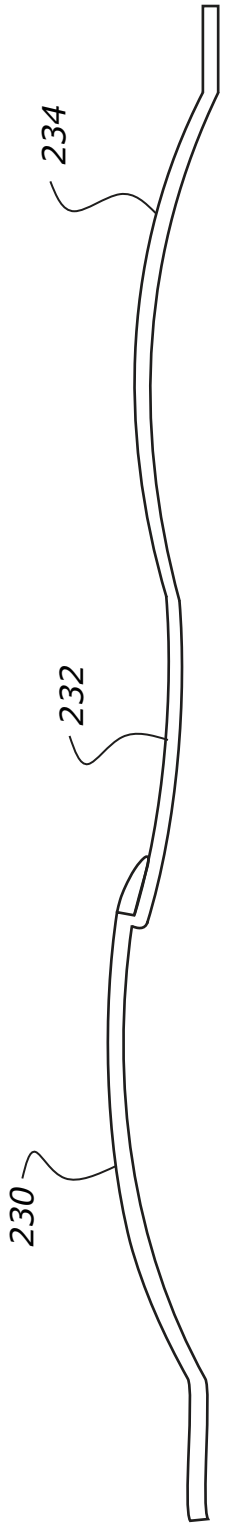

FIG. 5B

FIG. 6A

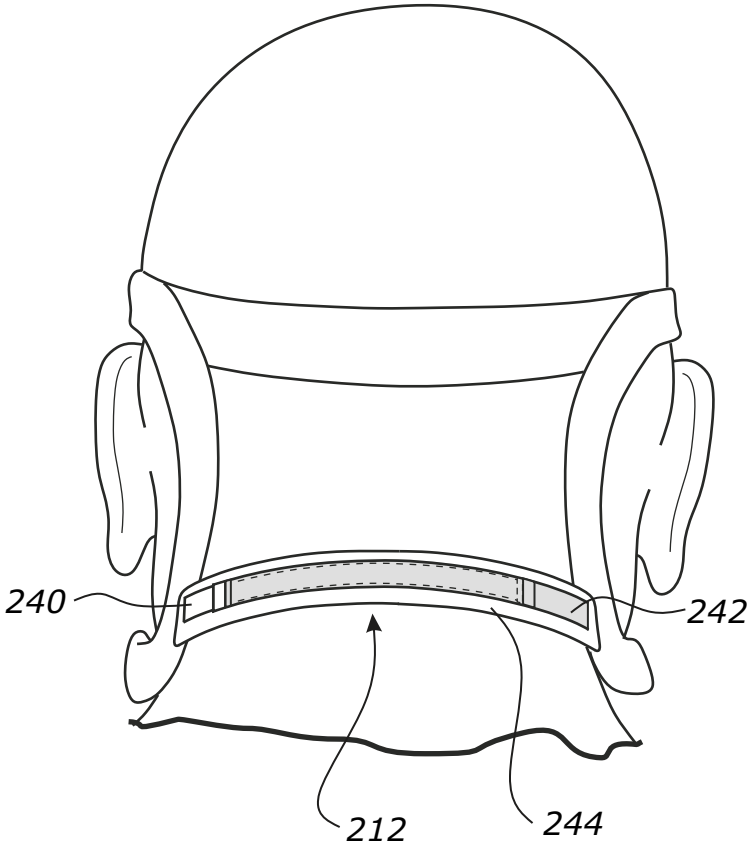

FIG. 6B

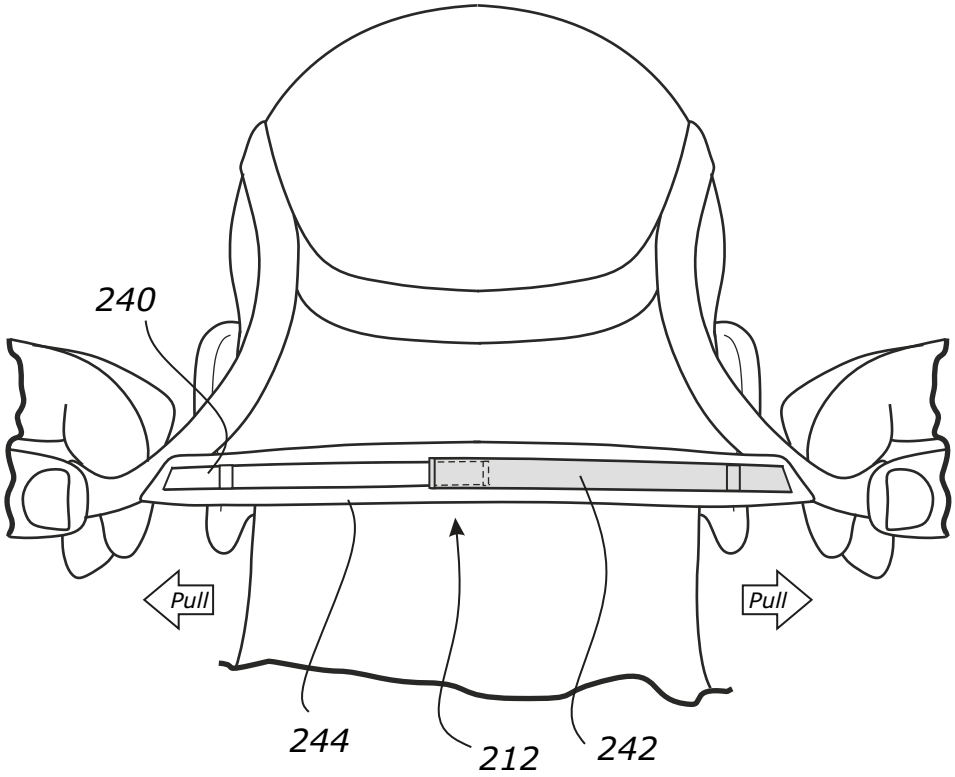

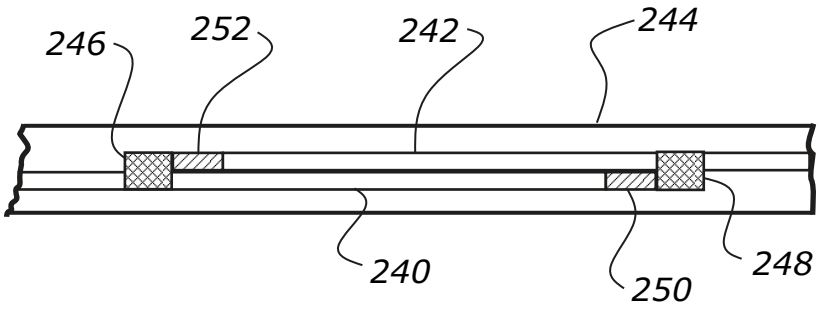

FIG. 7A

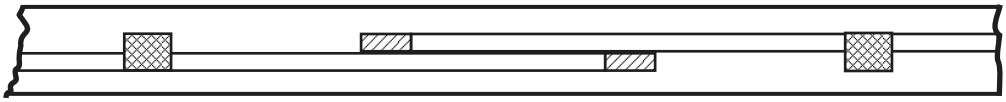

FIG. 7B

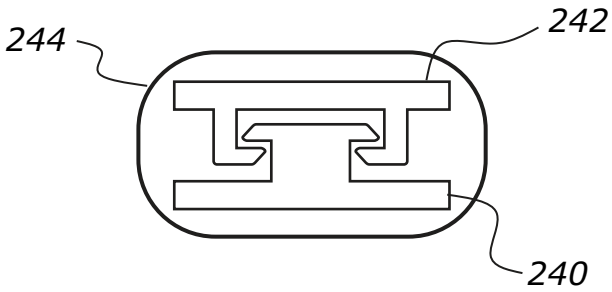

FIG. 7C

FIG. 8A

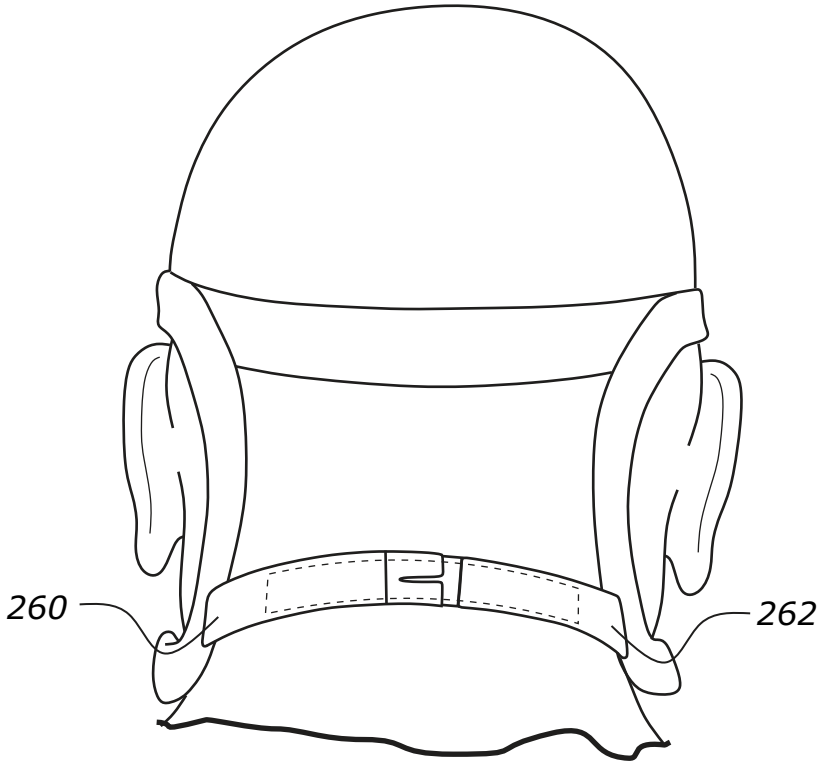

FIG. 8B

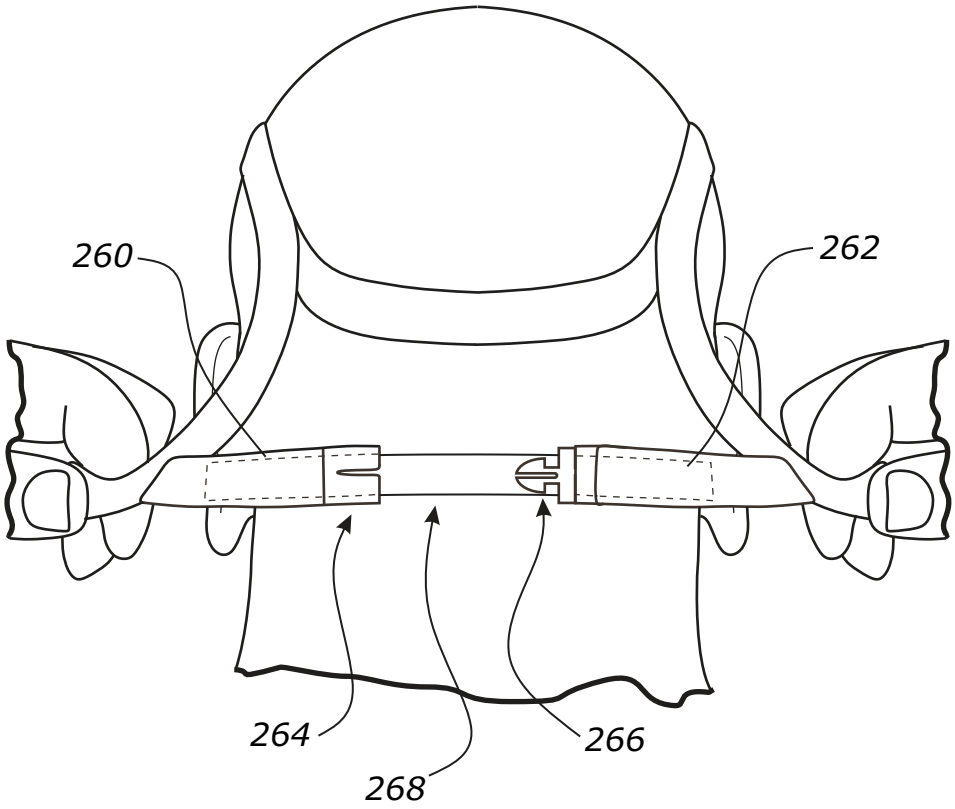

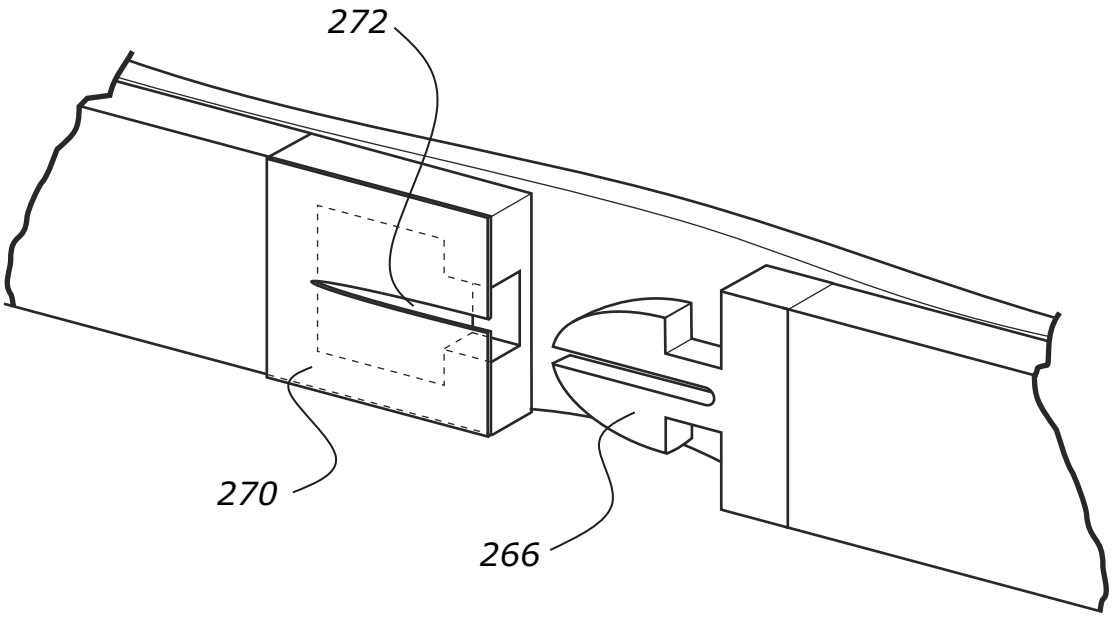

FIG. 9A

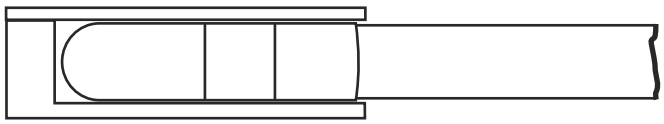

FIG. 9B

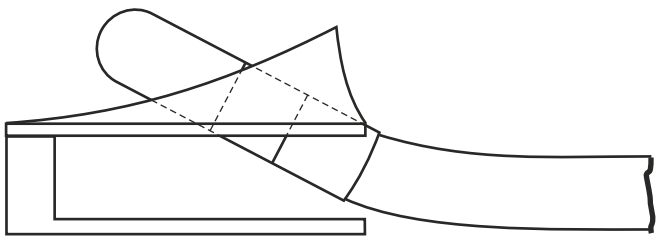

FIG. 9C

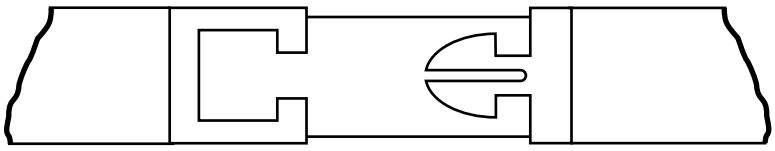

FIG. 9D

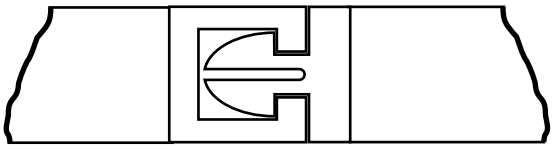

FIG. 9E

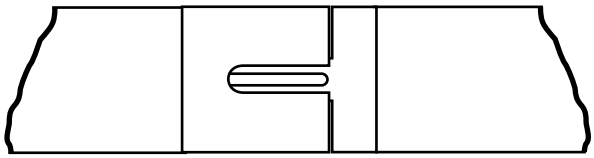

FIG. 9F

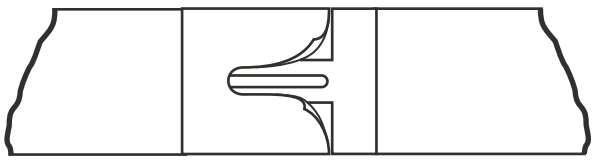

FIG. 9G

FIG. 10A

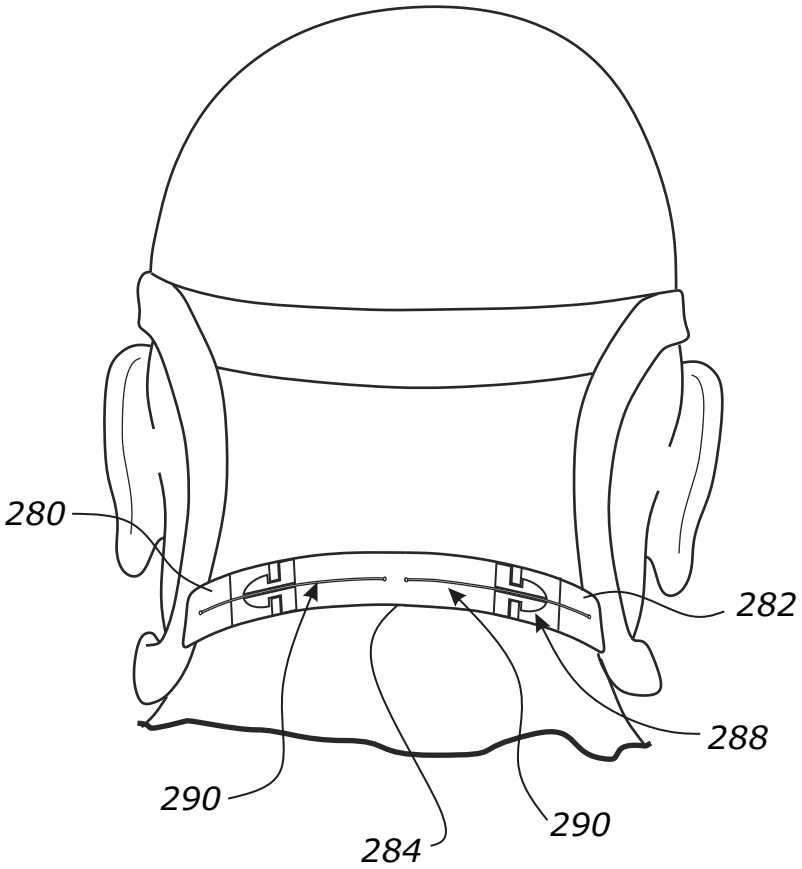

FIG. 10B

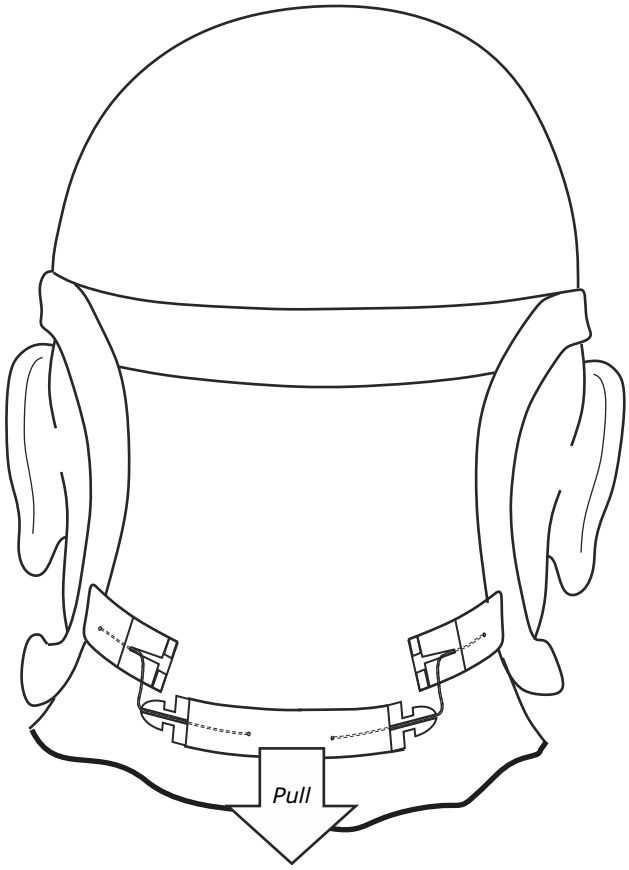

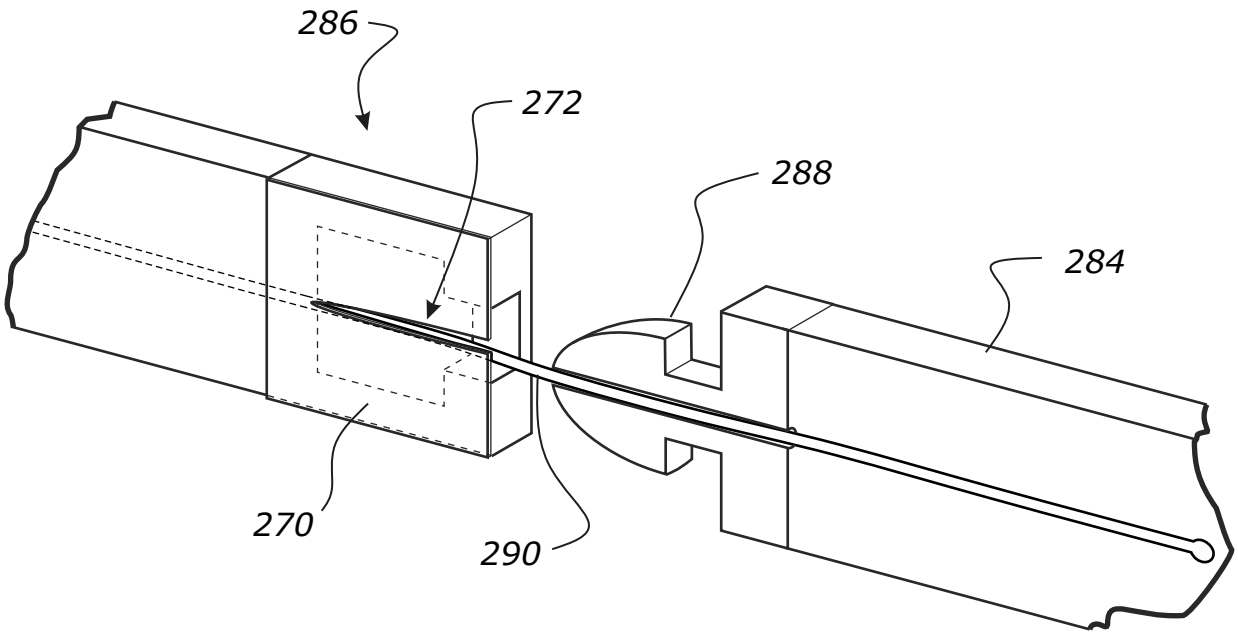

FIG. 11A

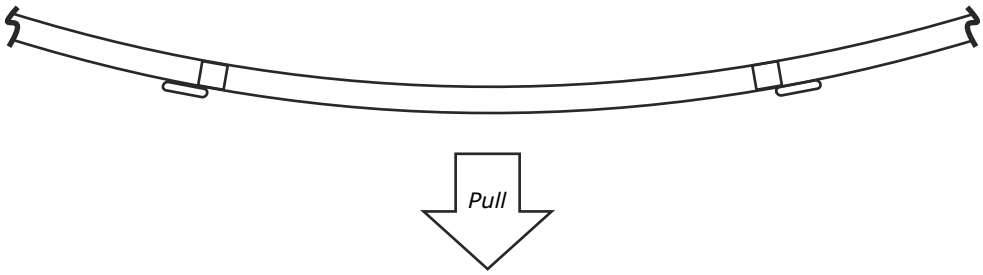

FIG. 11B



FIG. 11C

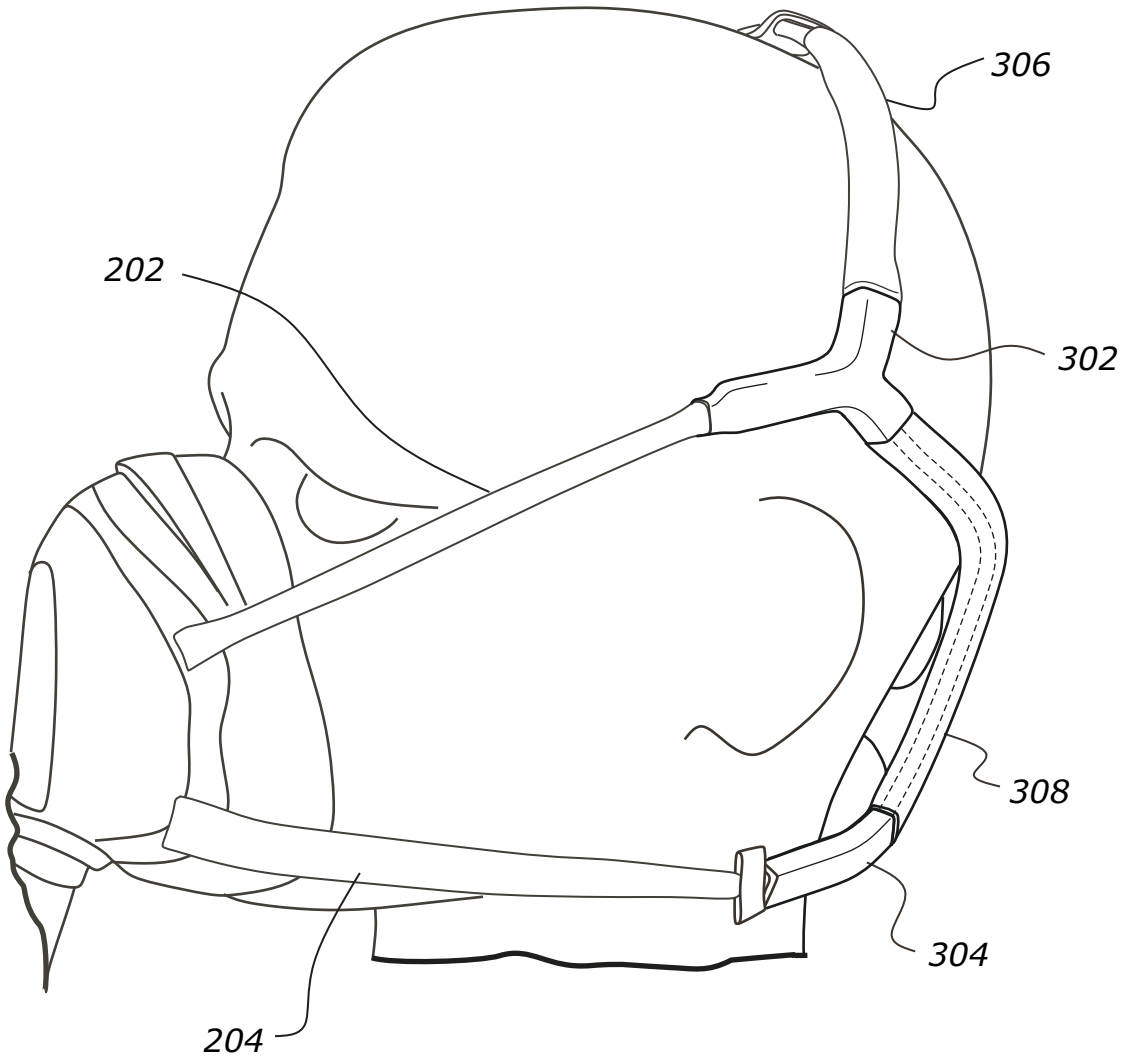

FIG. 12

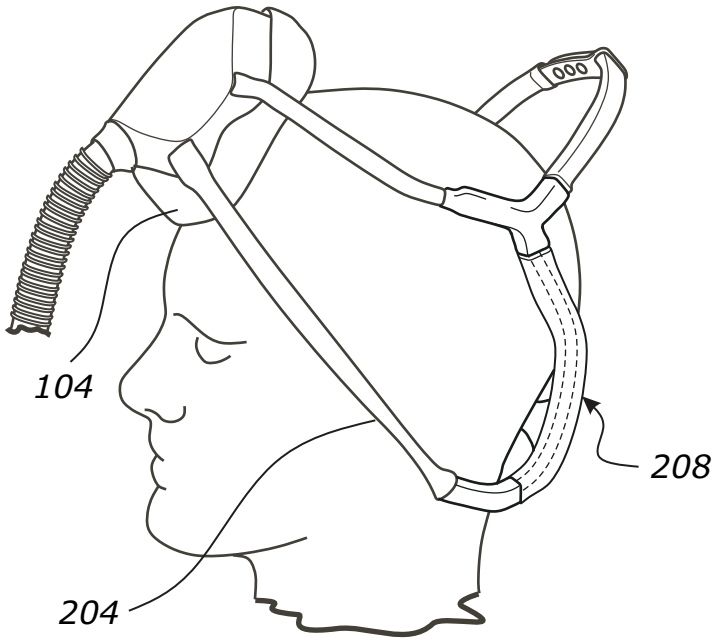

FIG. 13A

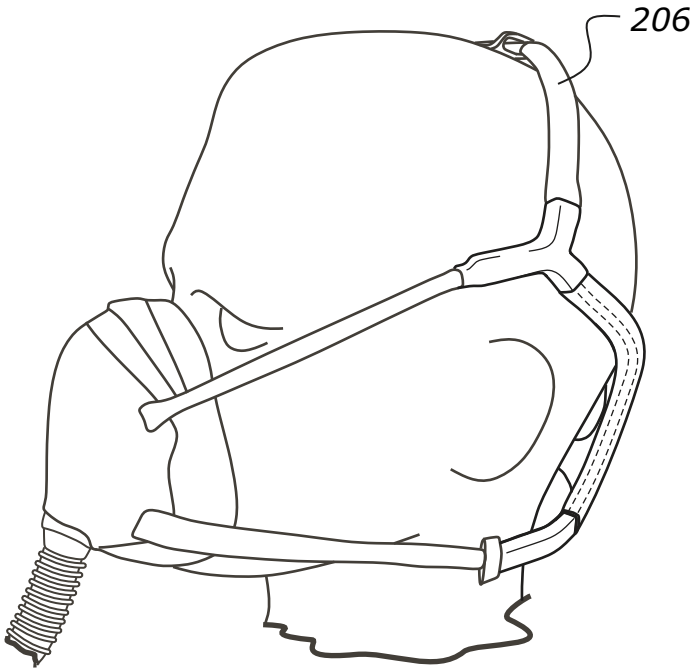

FIG. 13B

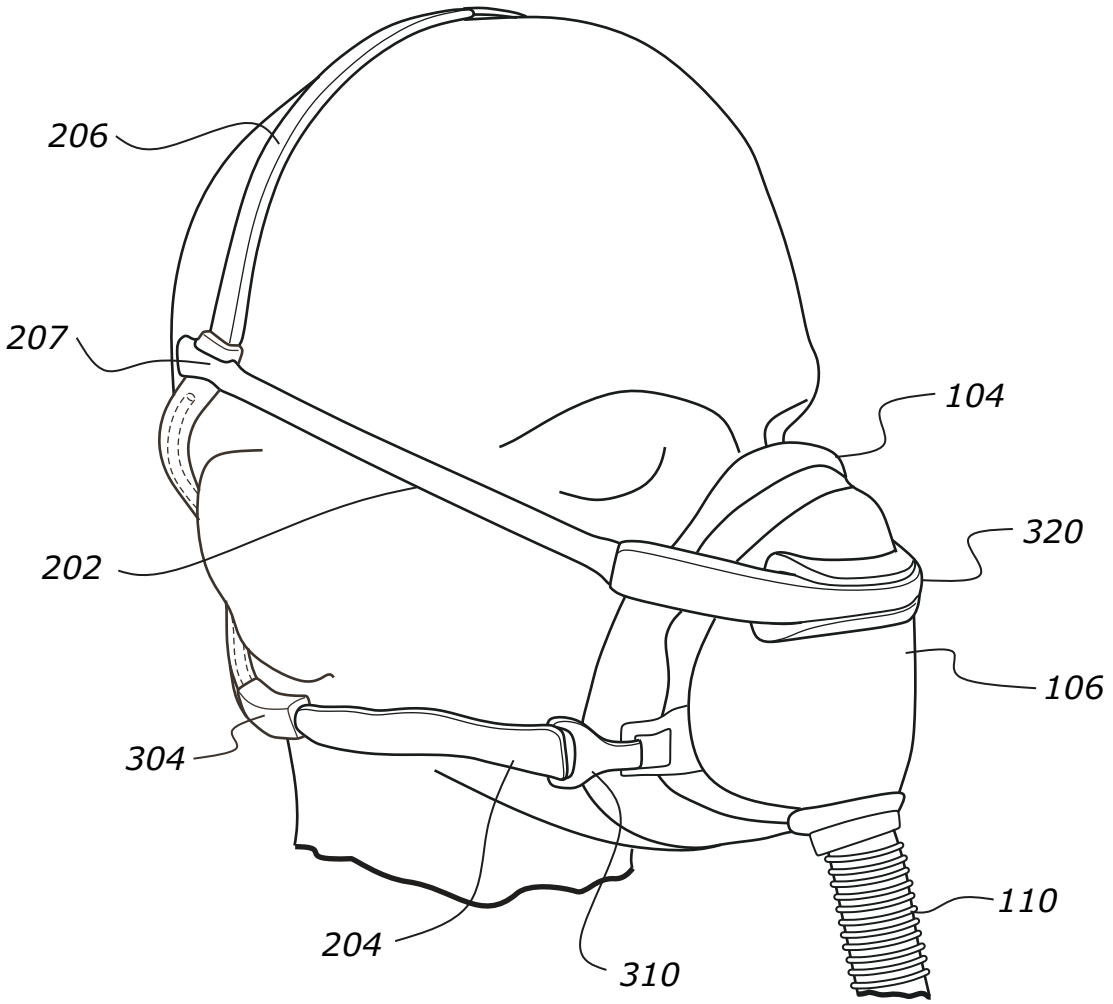

FIG. 14

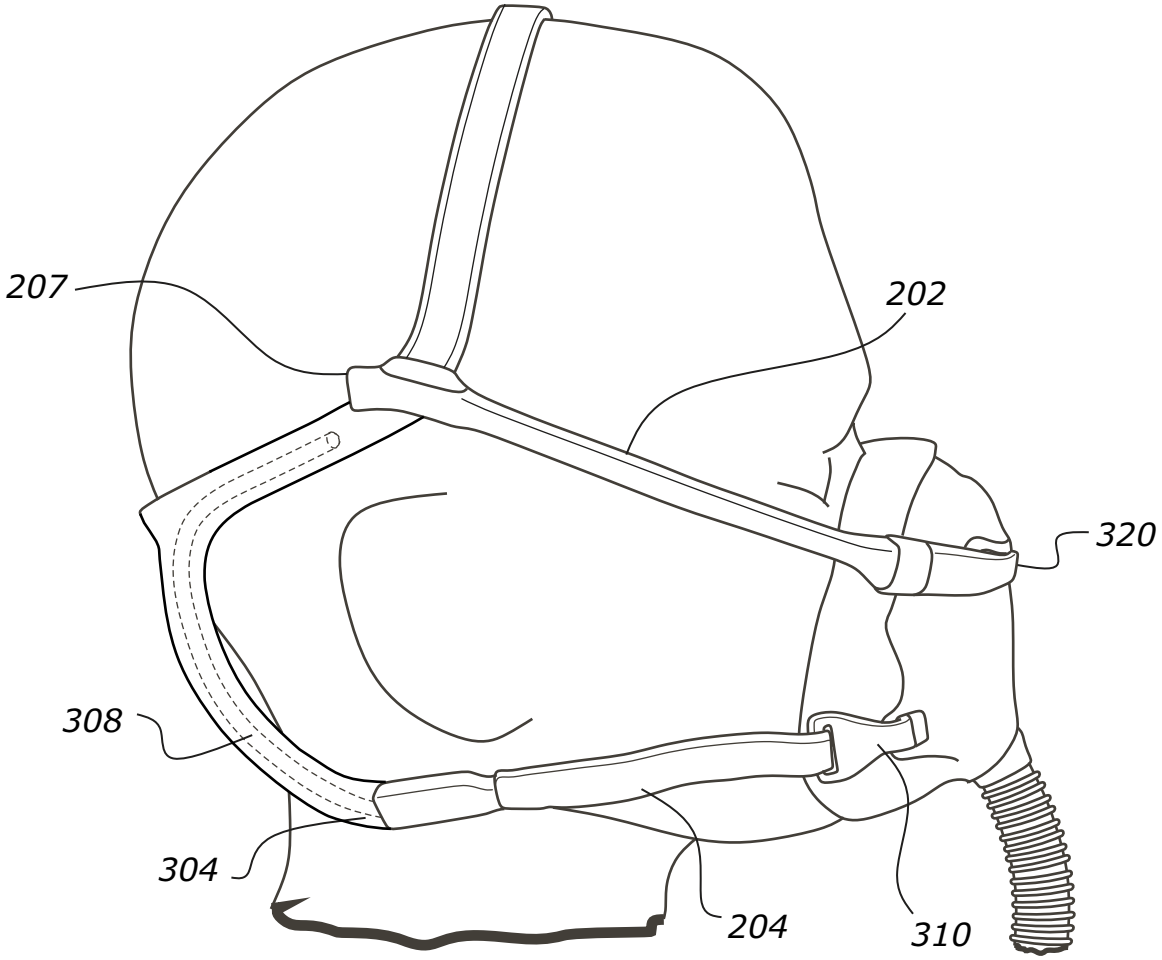

FIG. 15

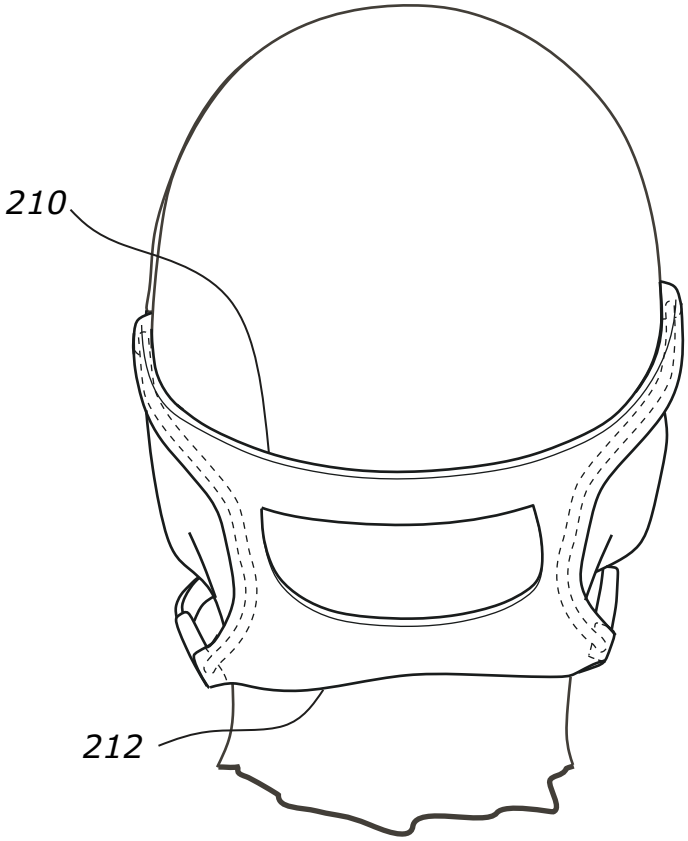

FIG. 16

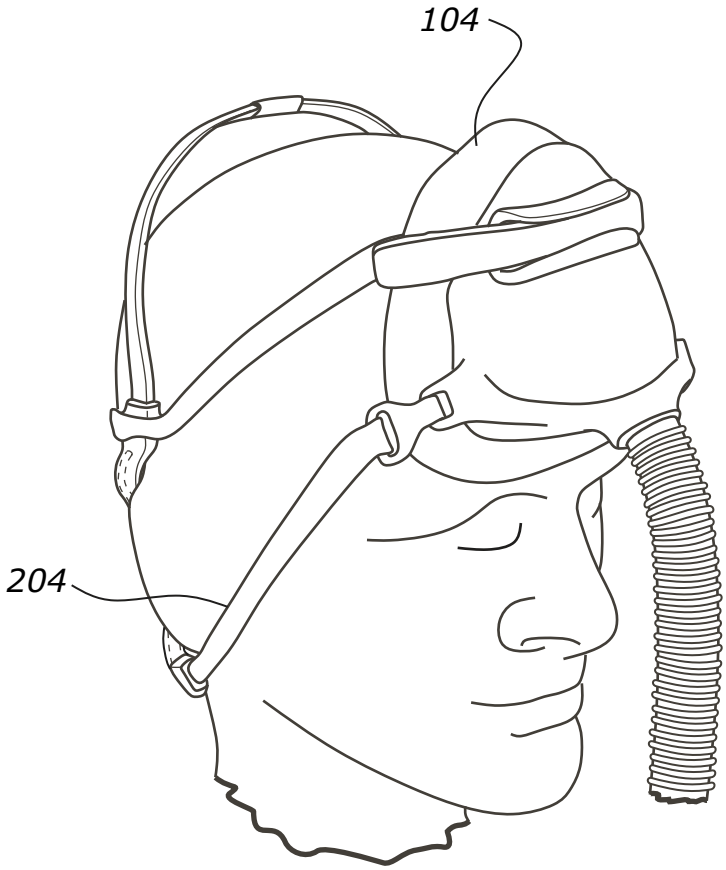

FIG. 17

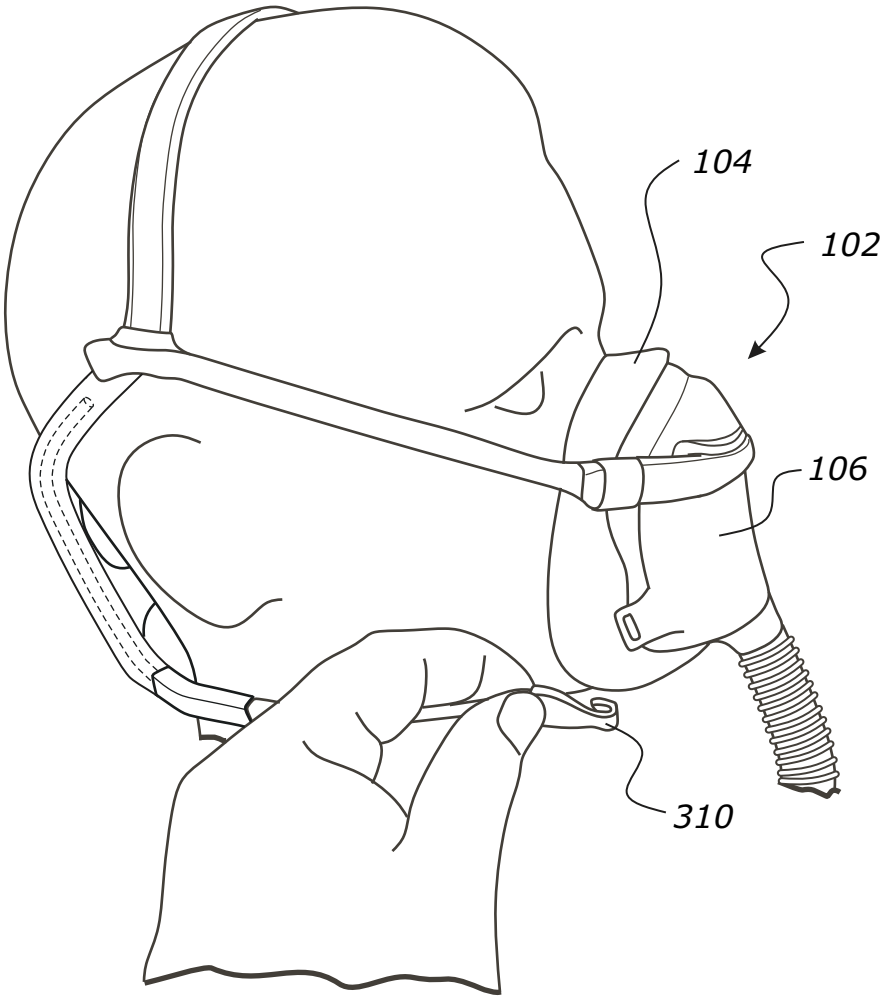

FIG. 18

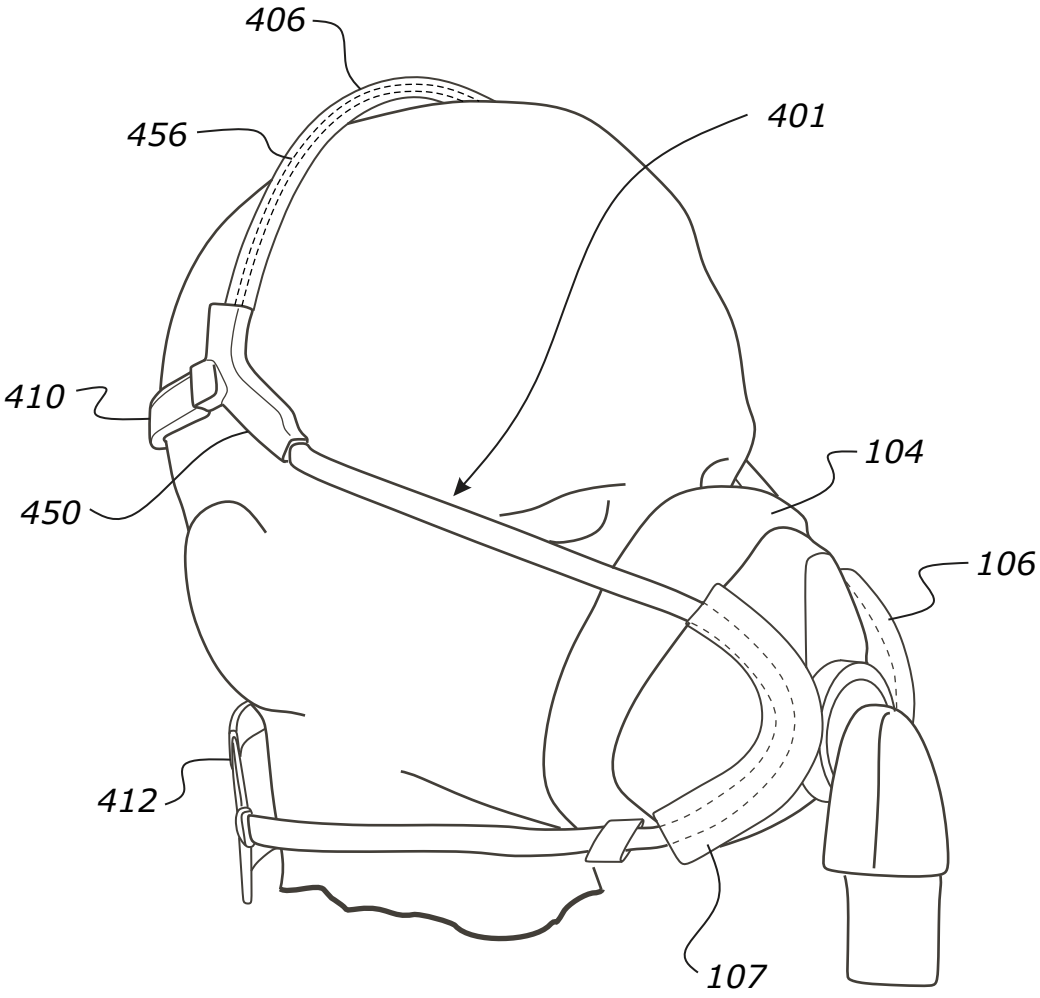

FIG. 19

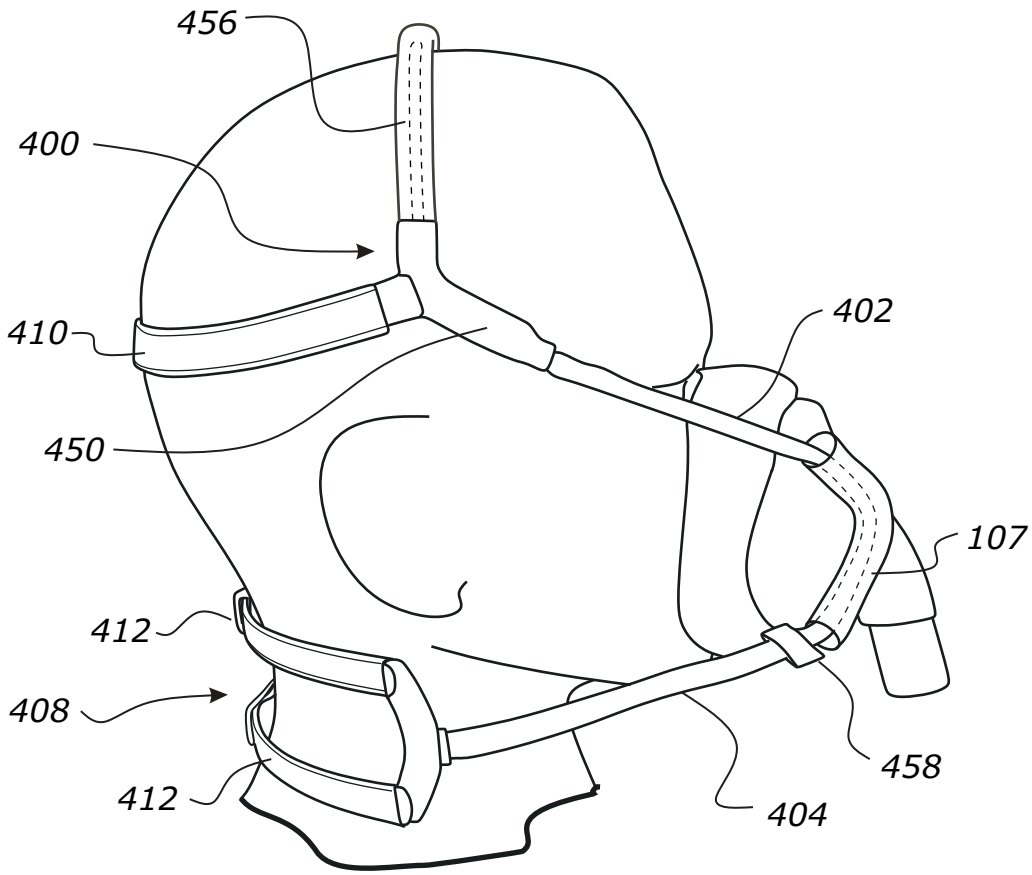

FIG. 20

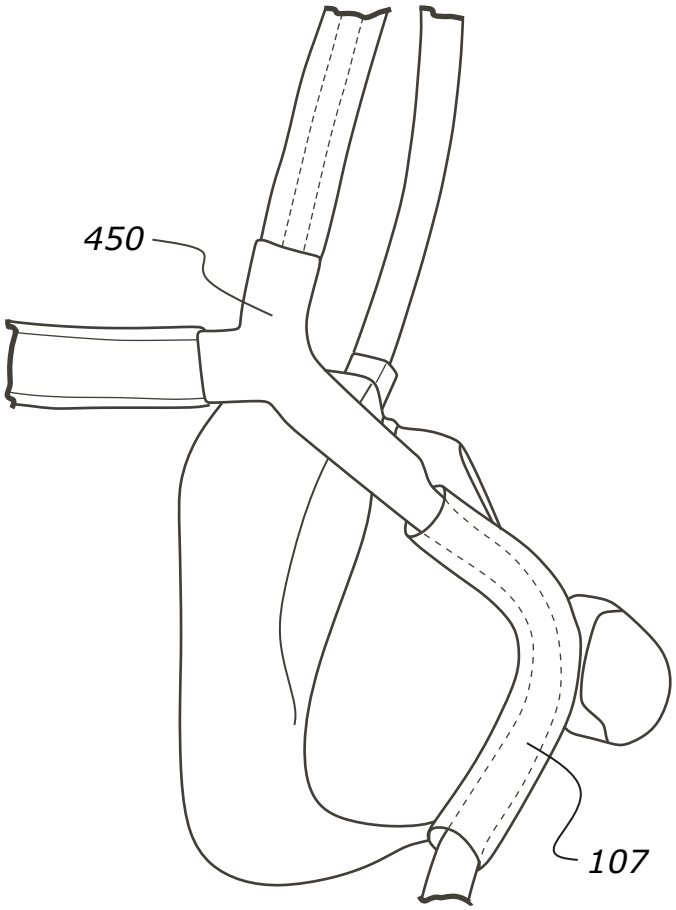

FIG. 21A

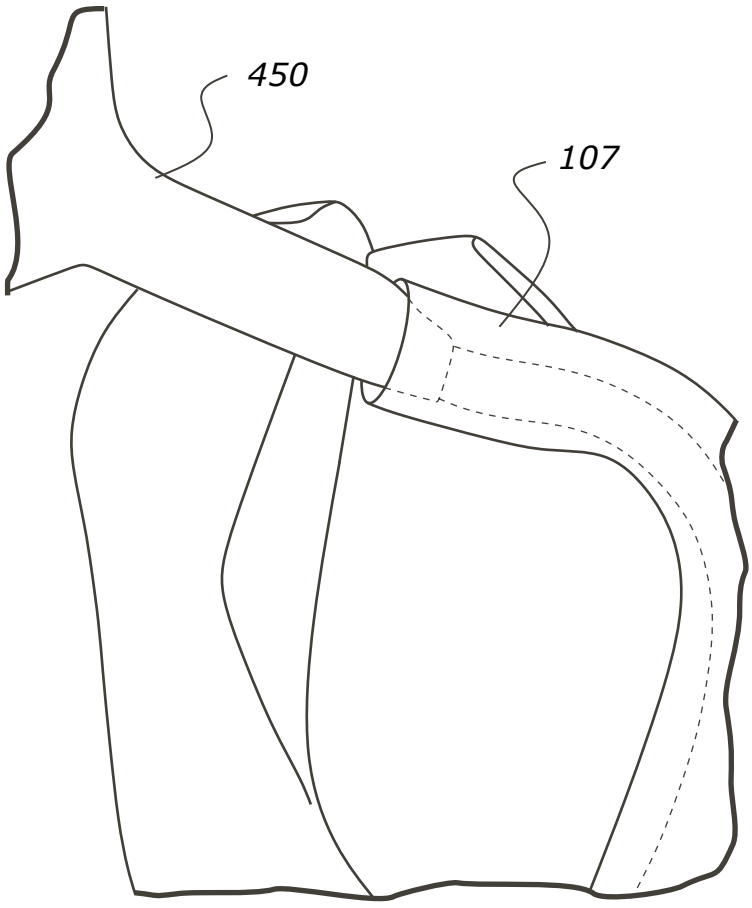

FIG. 21B

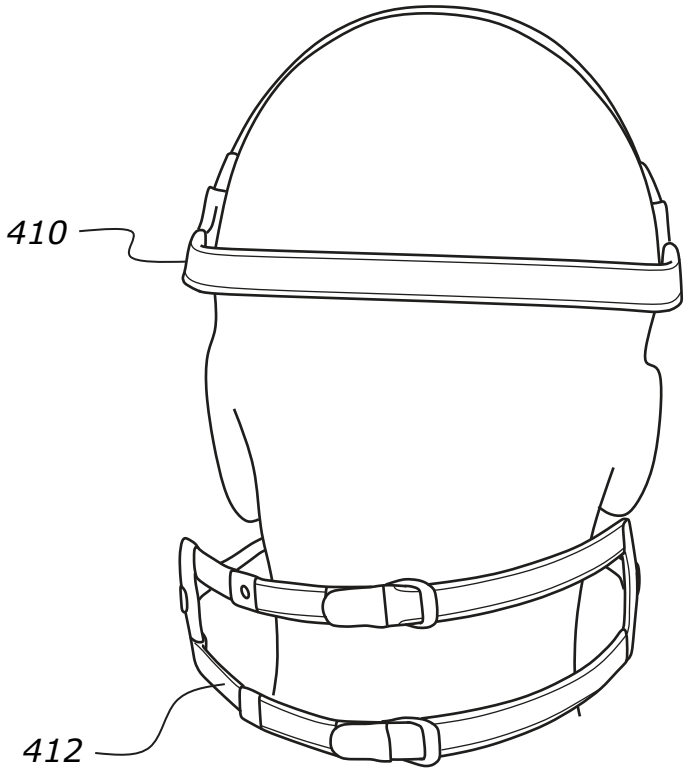

FIG. 22A

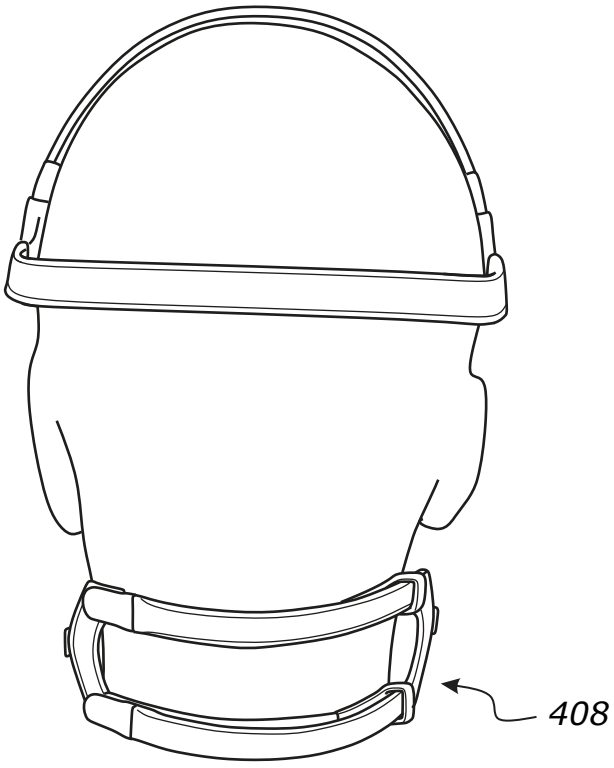

FIG. 22B

FIG. 23A

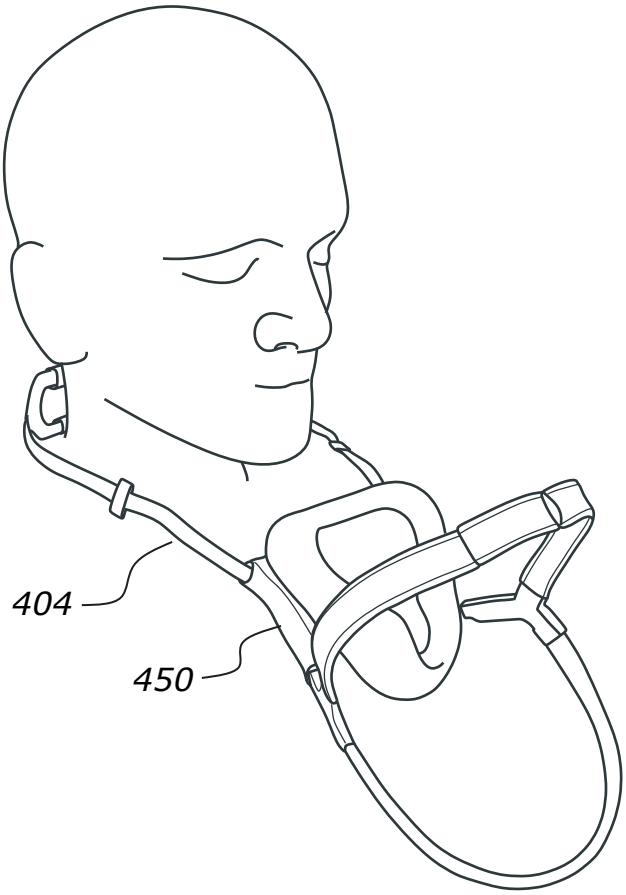

FIG. 23B

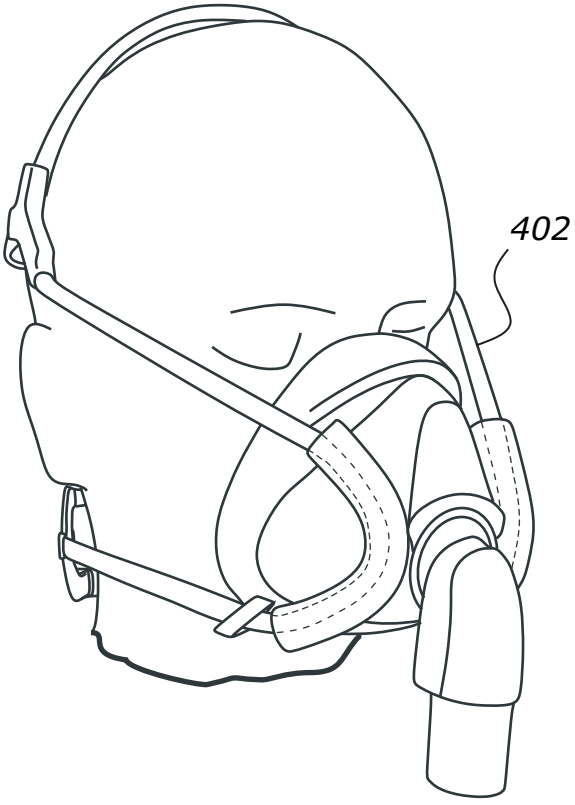

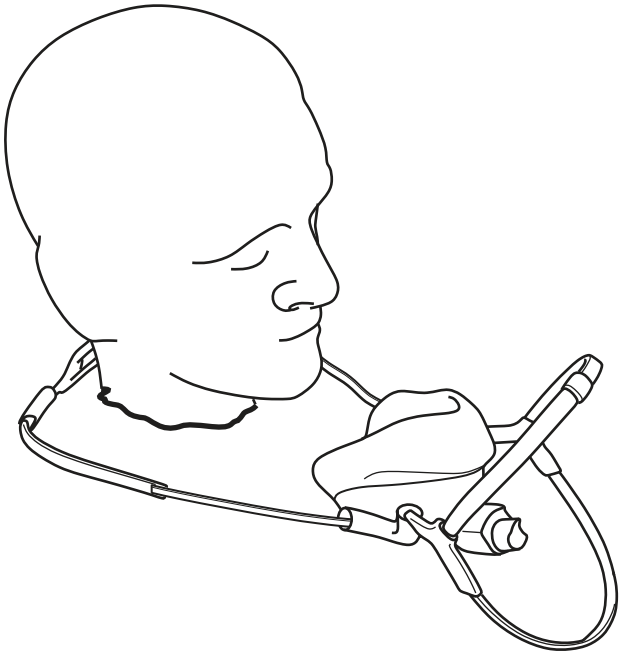

FIG. 24A

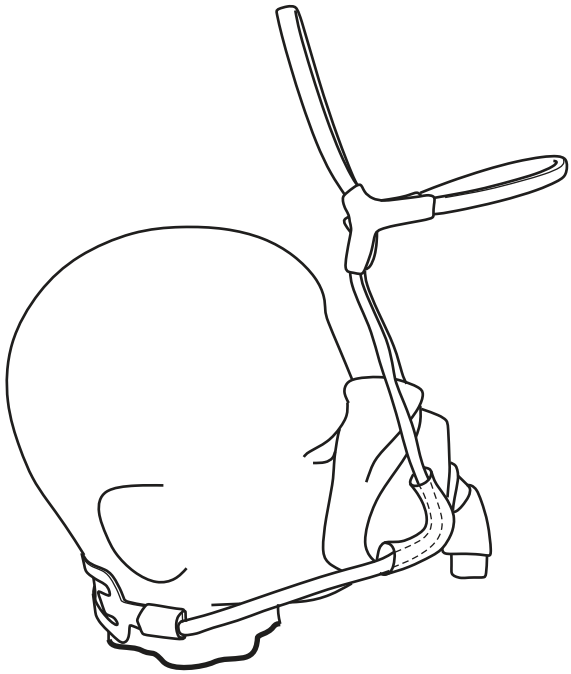

FIG. 24B

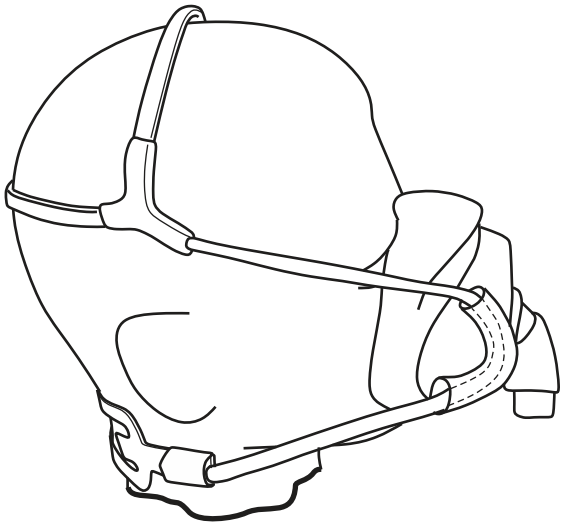

FIG. 24C

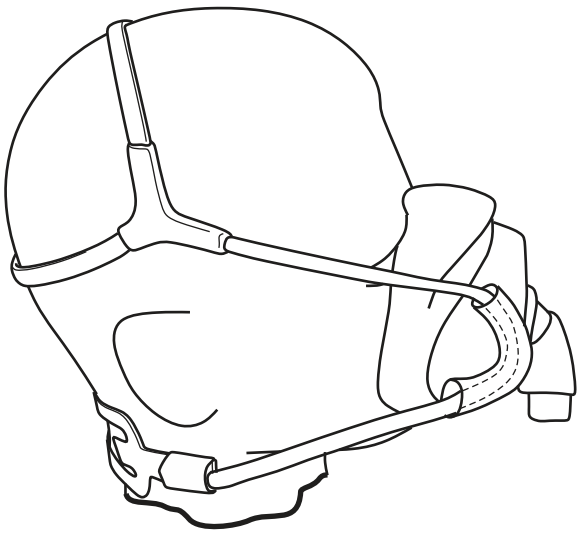

FIG. 24D

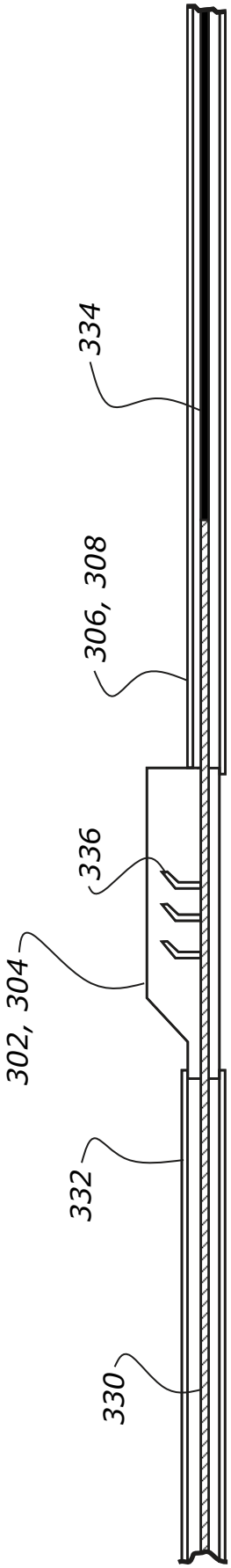

FIG. 25A

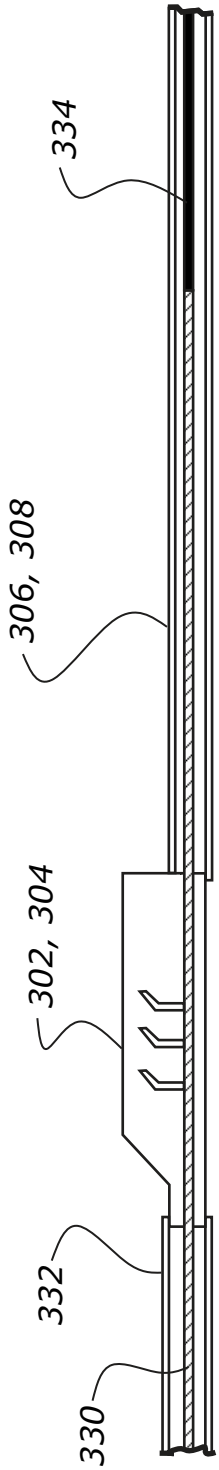

FIG. 25B

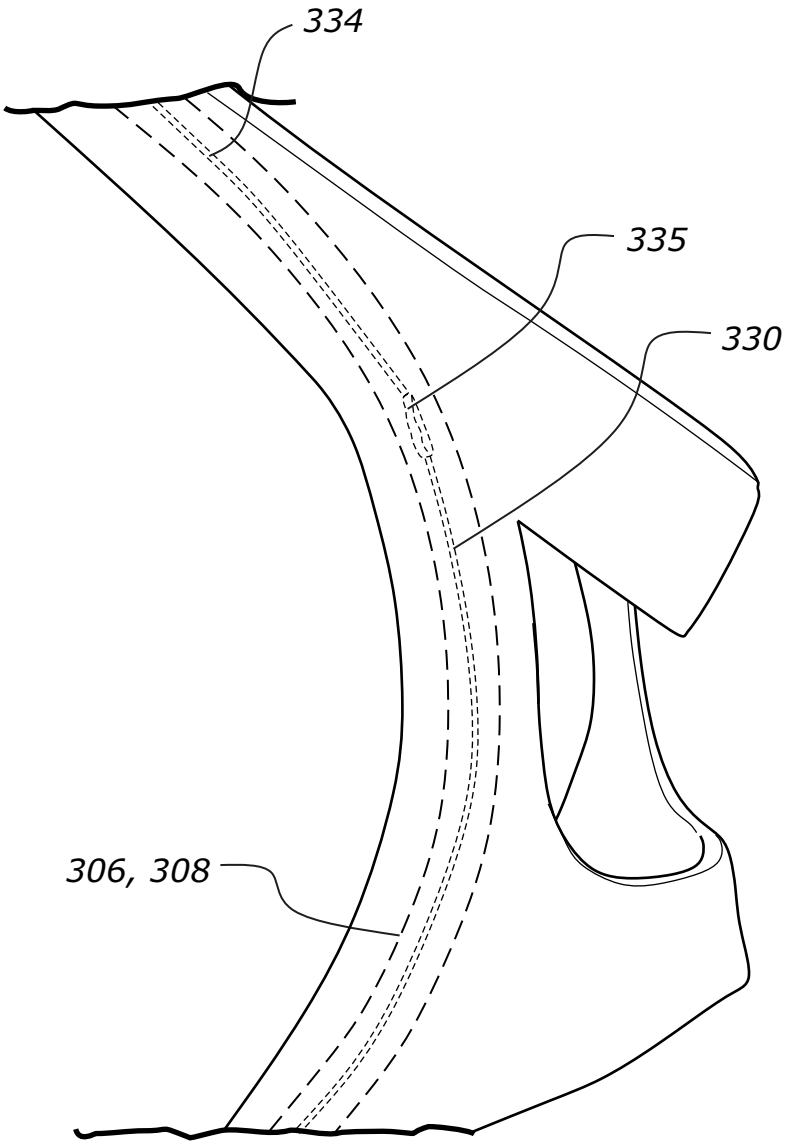

FIG. 26

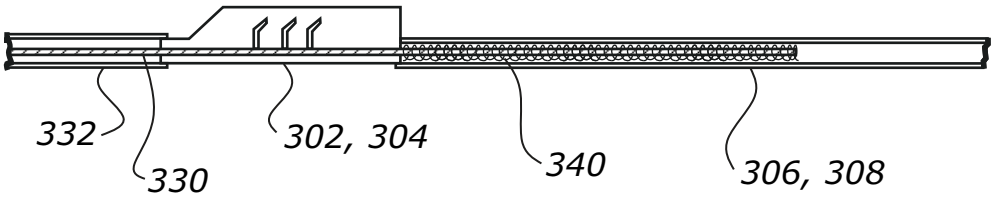

FIG. 27A

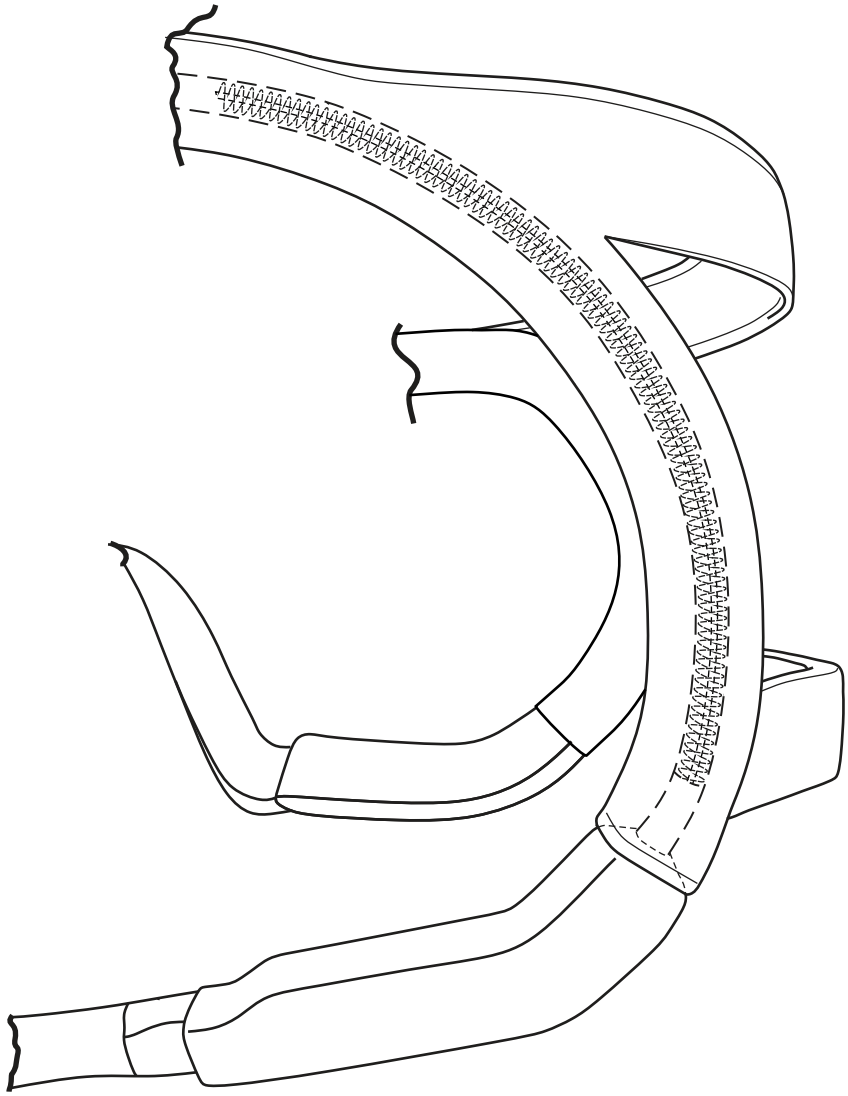

FIG. 27B

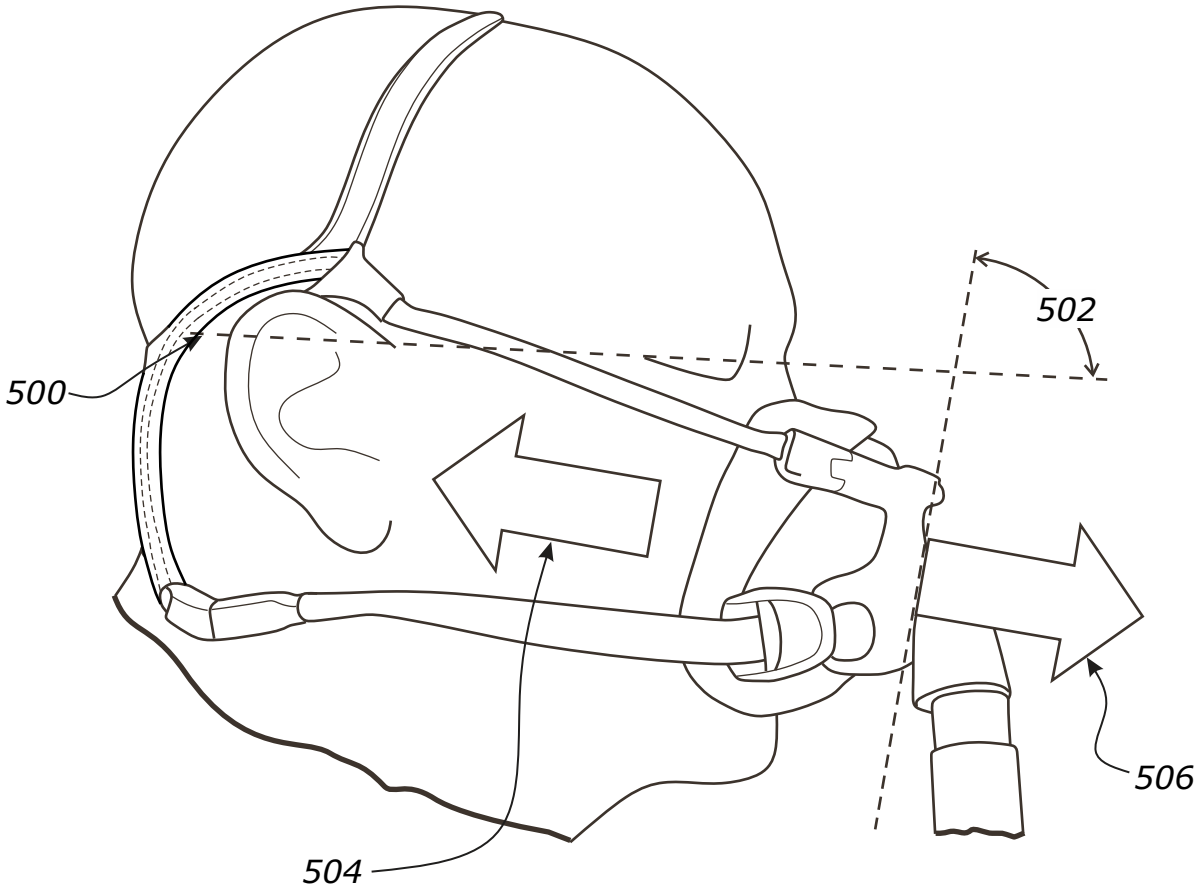

FIG. 28

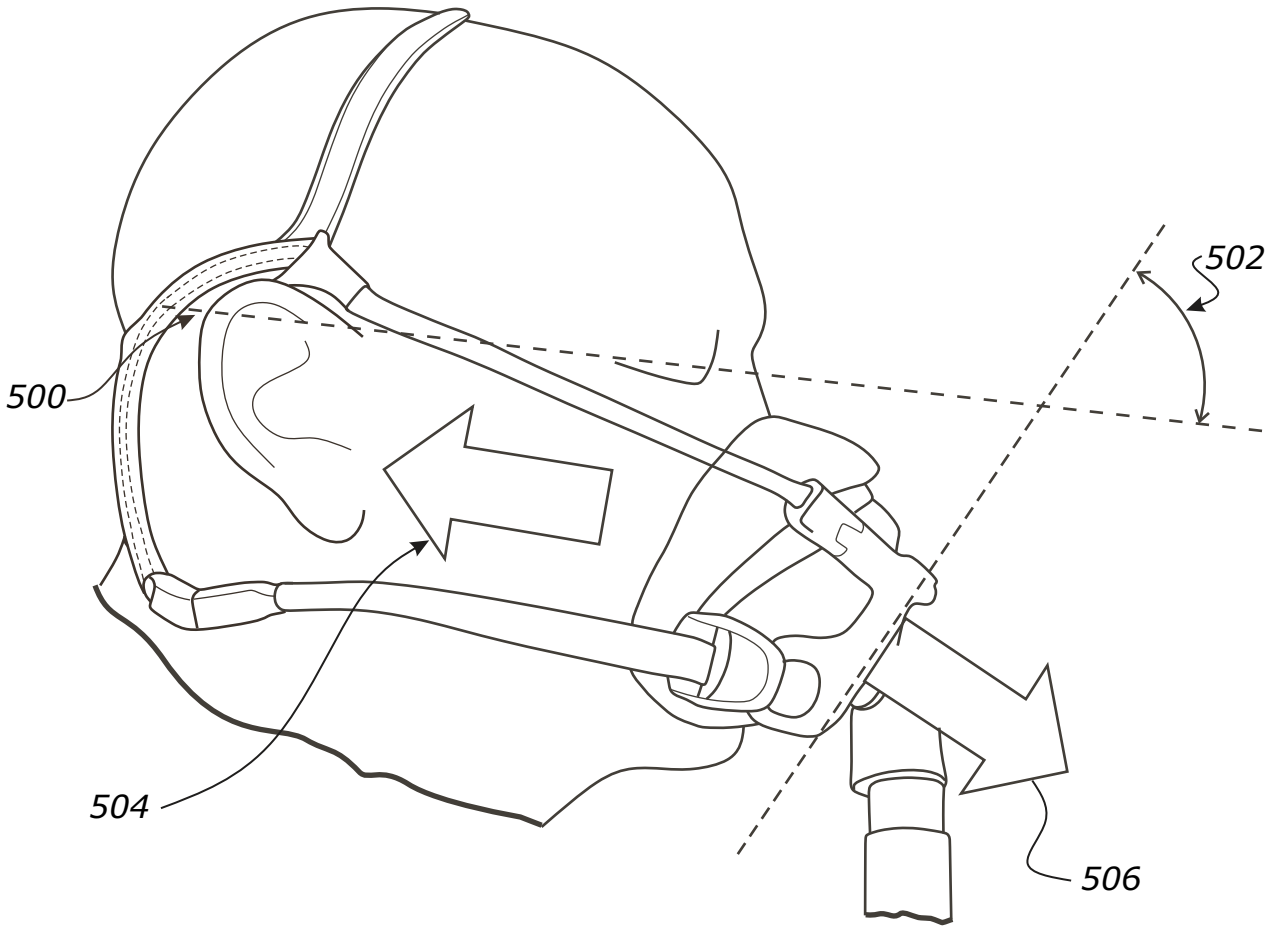

FIG. 29

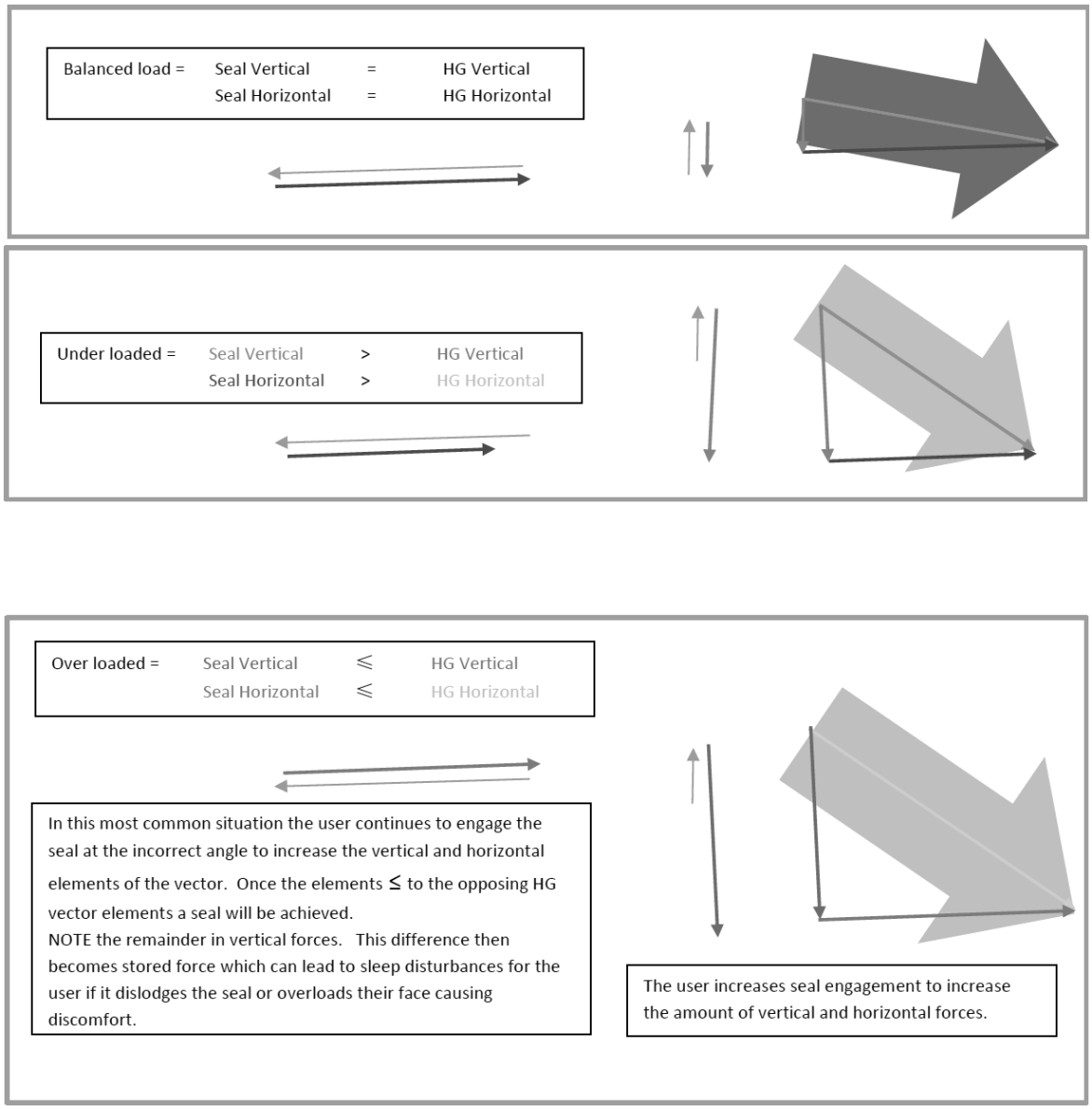
Balanced load = Seal Vertical = HG Vertical
Seal Horizontal = HG Horizontal
Under loaded = Seal Vertical > HG Vertical
Seal Horizontal > HG Horizontal
Over loaded = Seal Vertical ≤ HG Vertical
Seal Horizontal ≤ HG Horizontal
In this most common situation the user continues to engage the seal at the incorrect angle to increase the vertical and horizontal elements of the vector. Once the elements ≤ to the opposing HG vector elements a seal will be achieved.
NOTE the remainder in vertical forces. This difference then becomes stored force which can lead to sleep disturbances for the user if it dislodges the seal or overloads their face causing discomfort.
The user increases seal engagement to increase the amount of vertical and horizontal forces.

FIG. 30

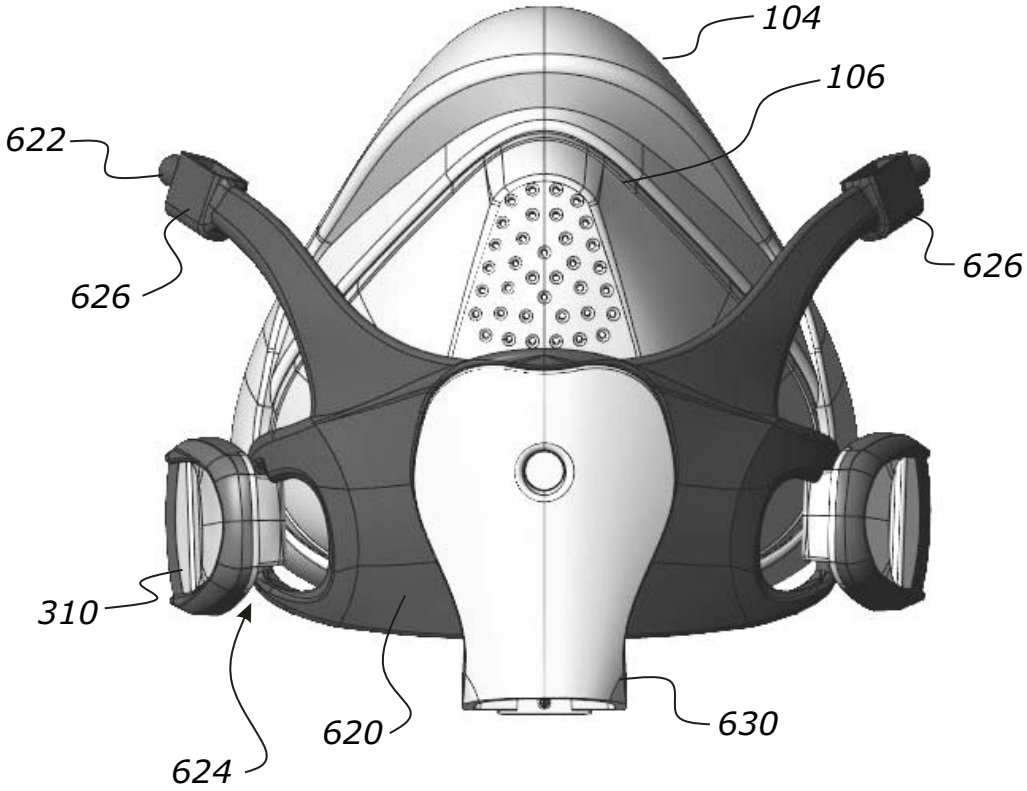

FIG. 31

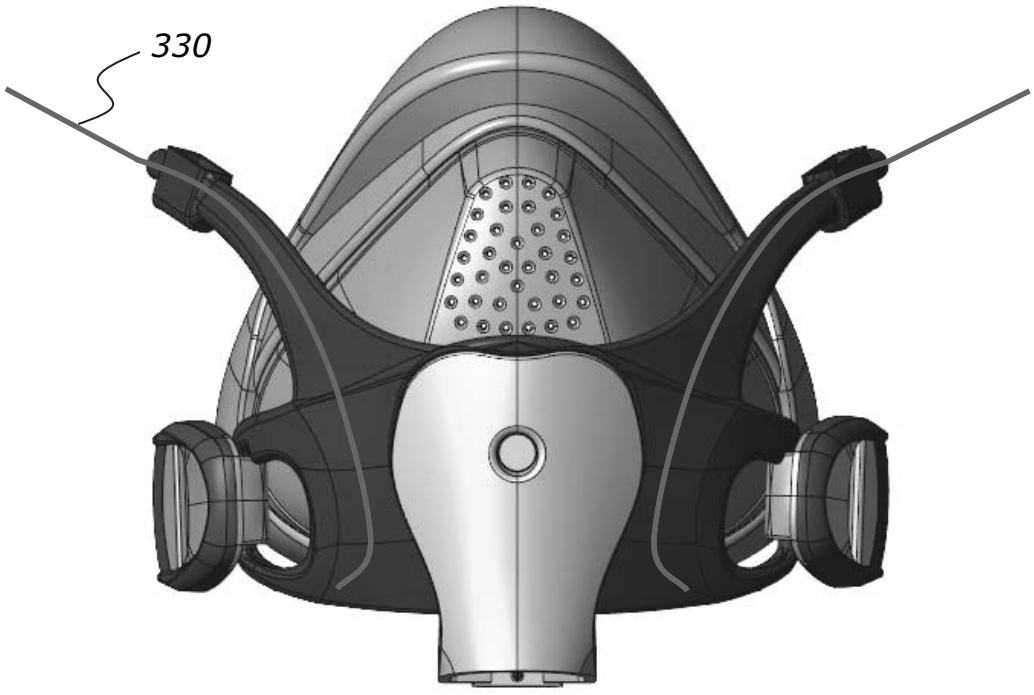

FIG. 32

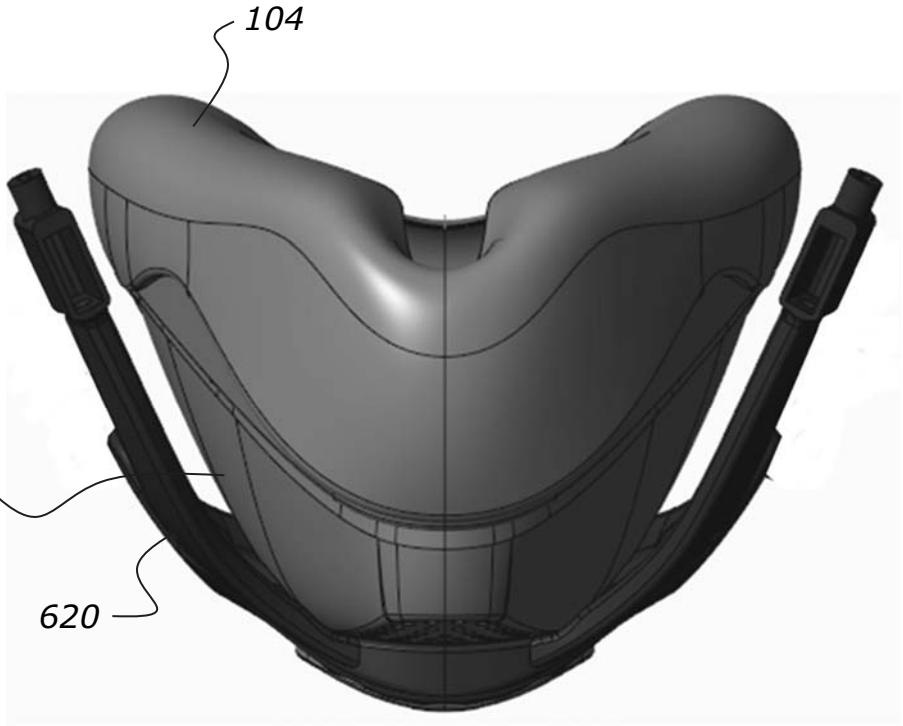

FIG. 33

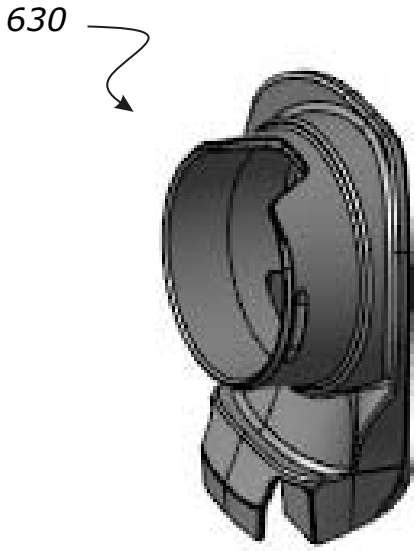

FIG. 34A



FIG. 34B

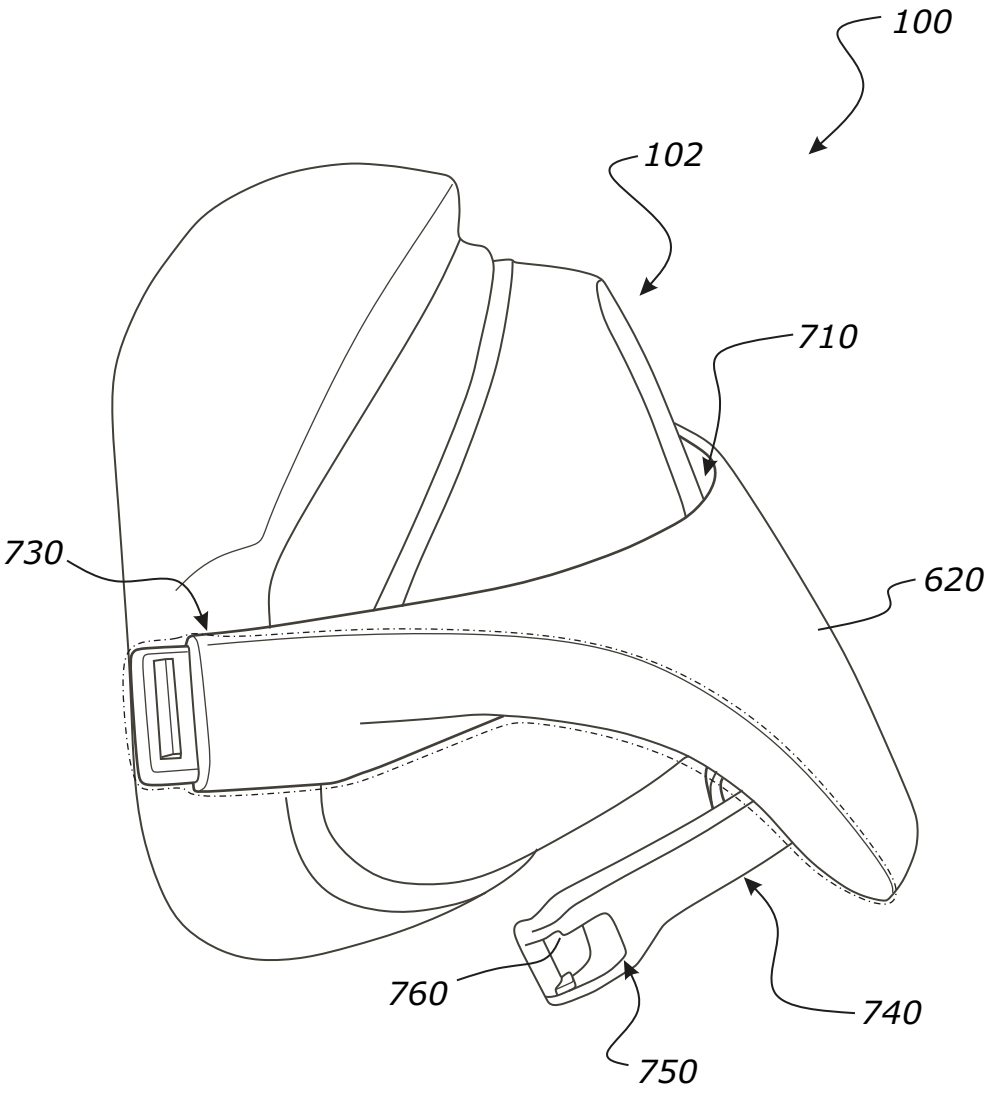

FIG. 35

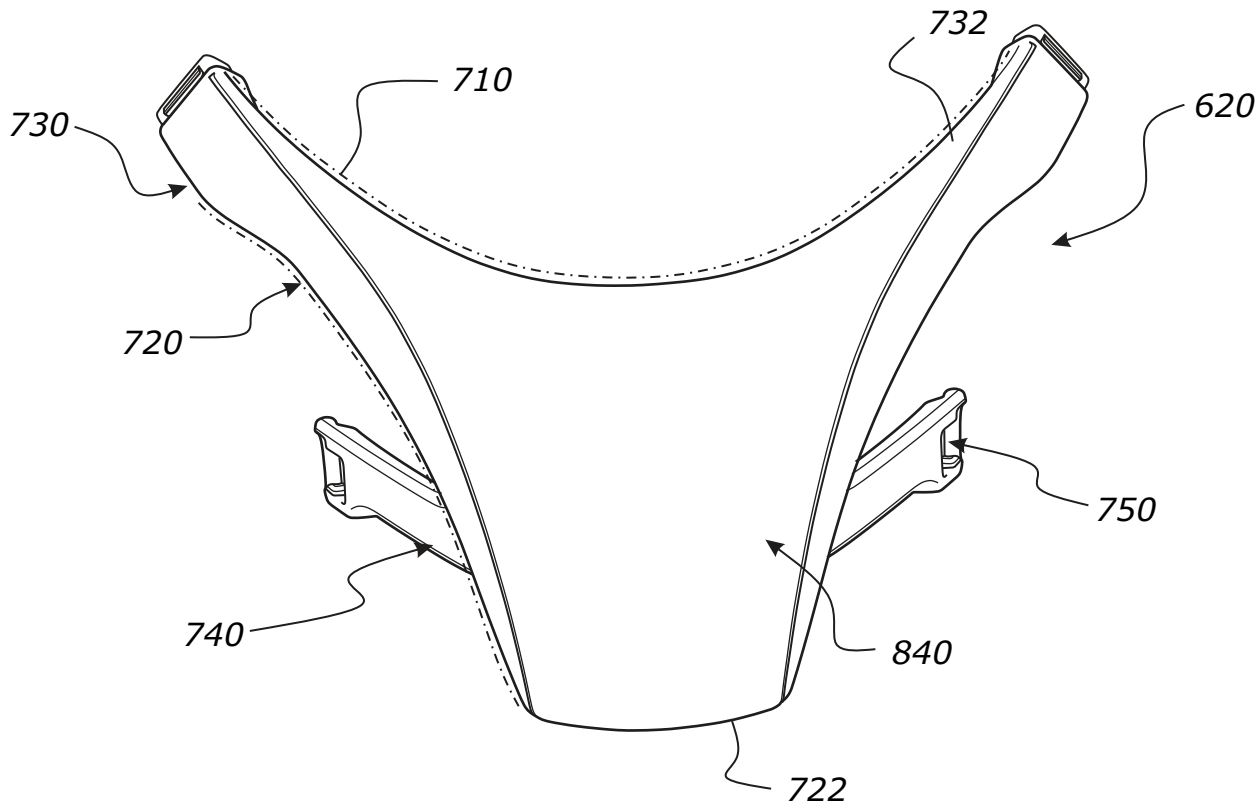

FIG. 36A

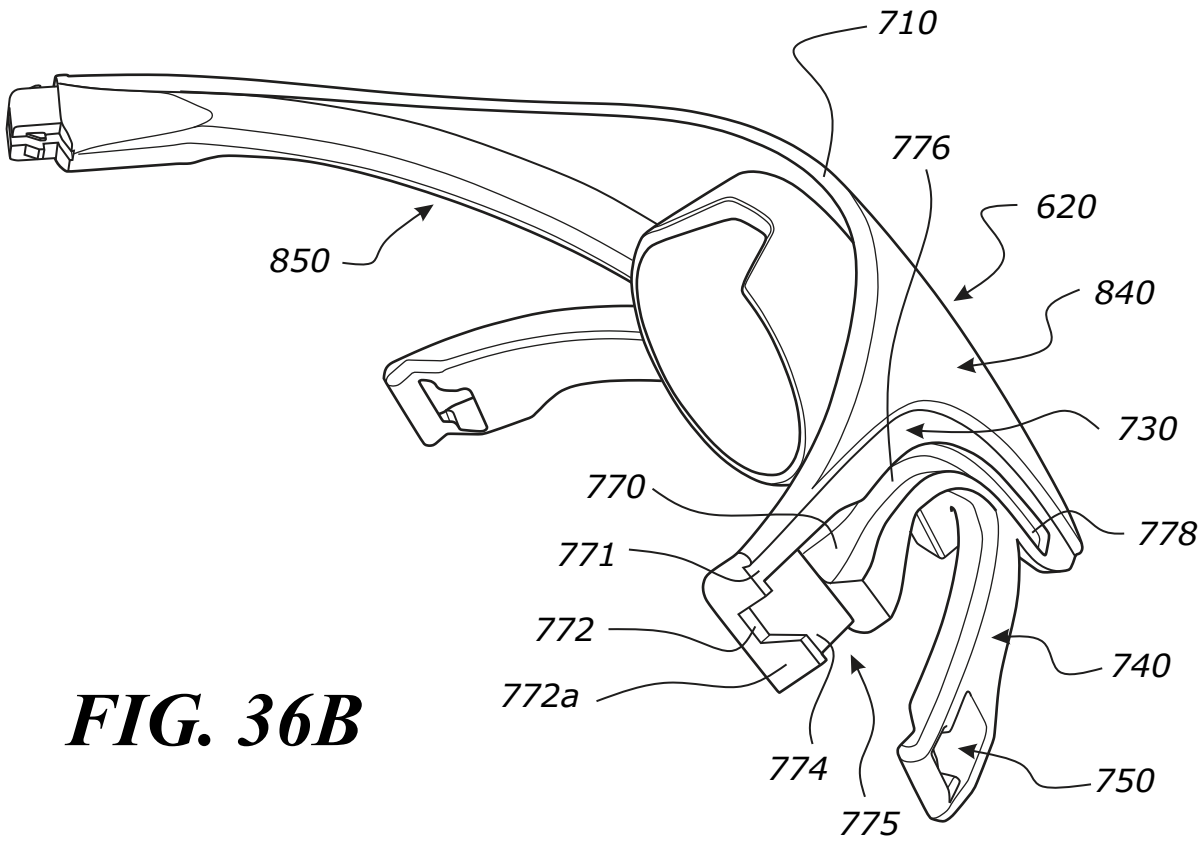

FIG. 36B

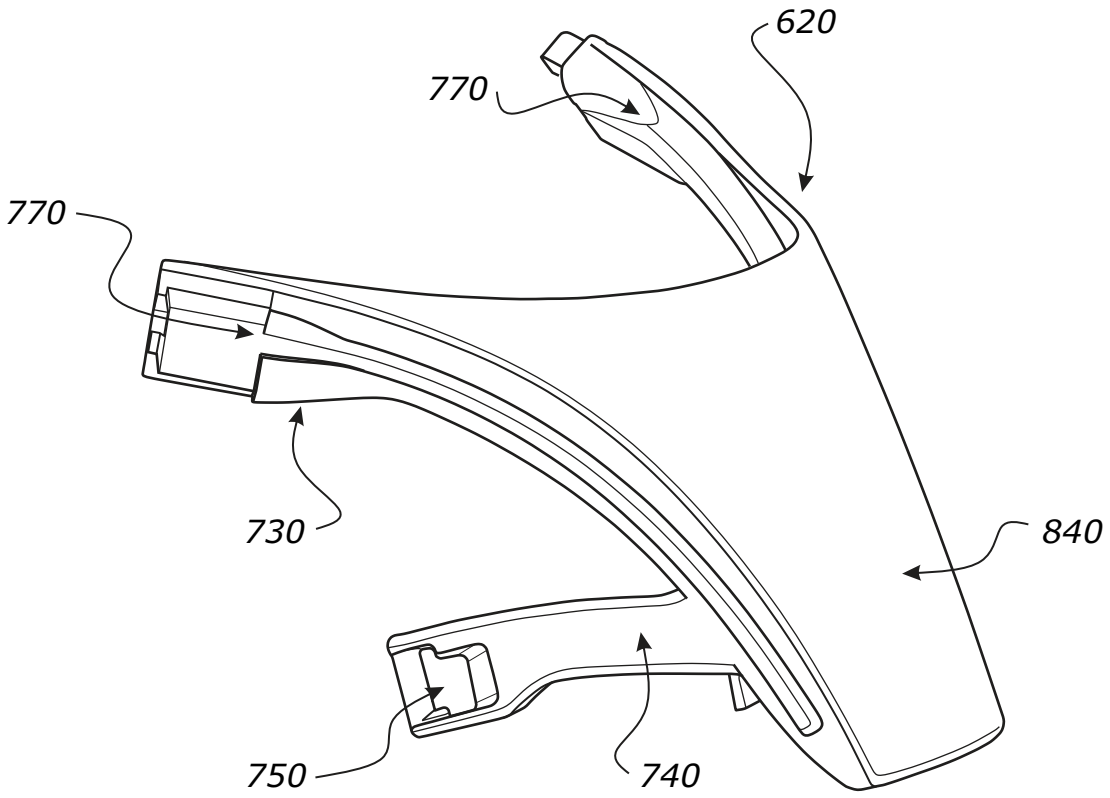

FIG. 37

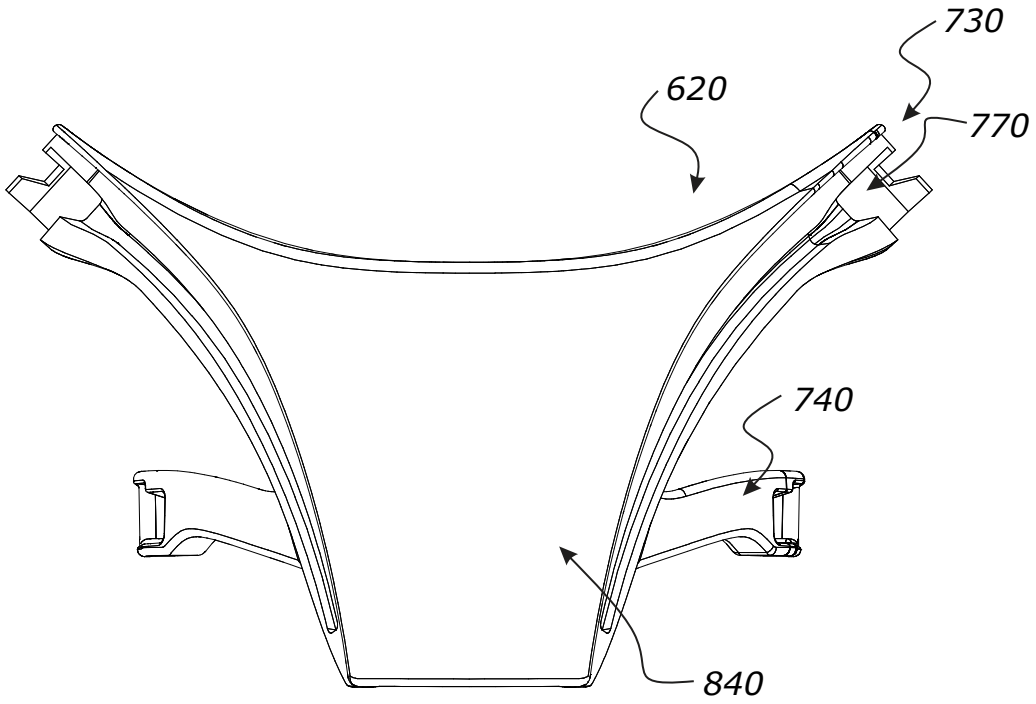

FIG. 38A

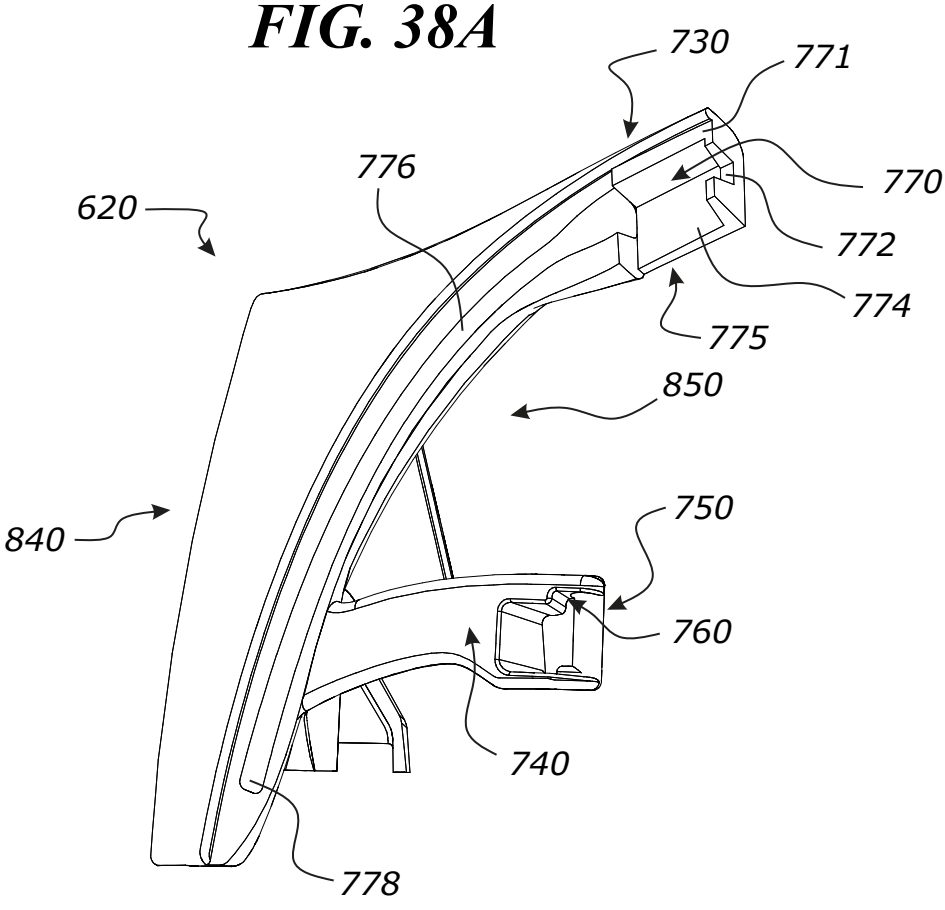

FIG. 38B

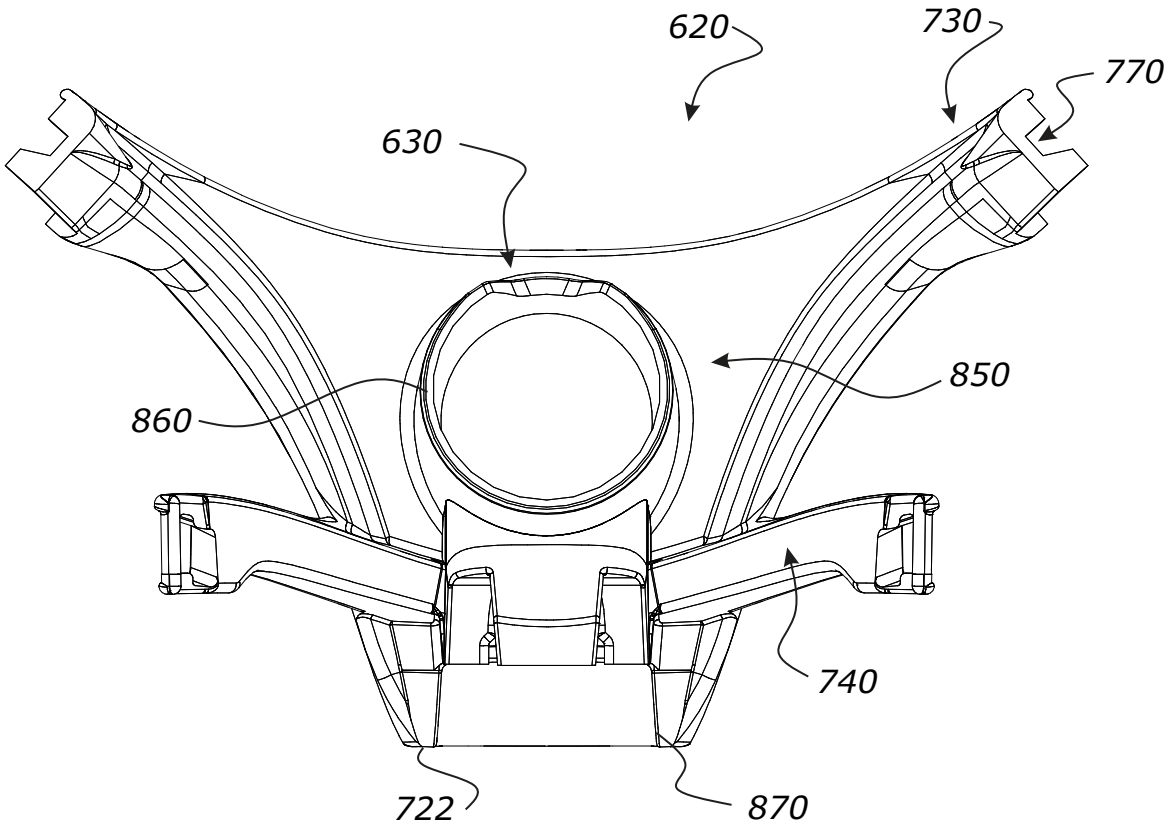

FIG. 38C

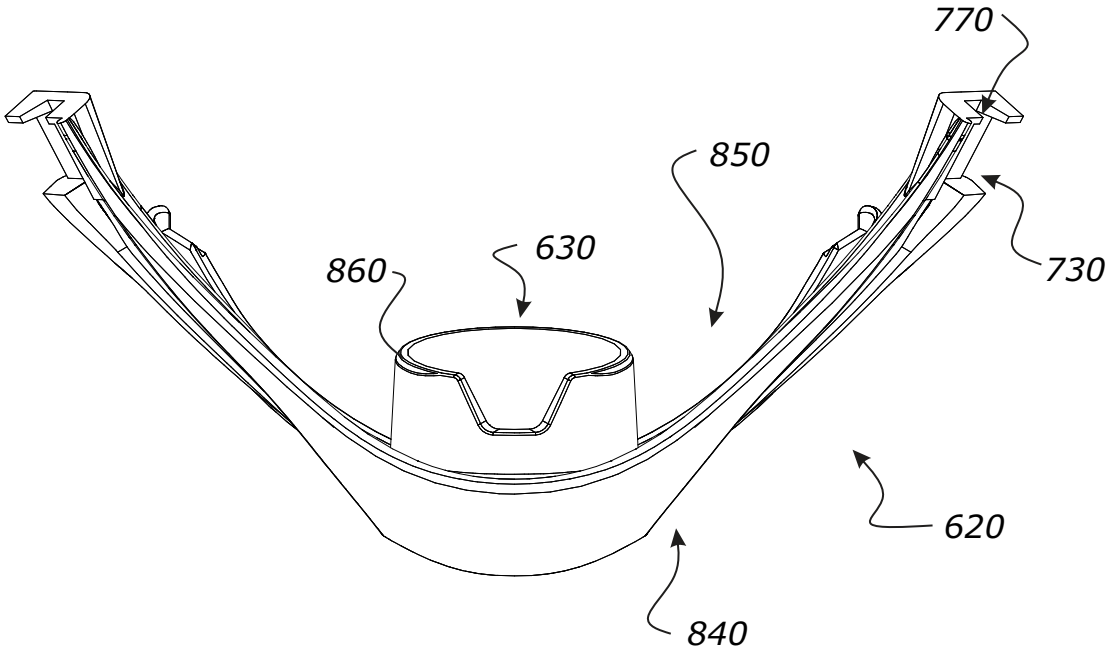

FIG. 38D

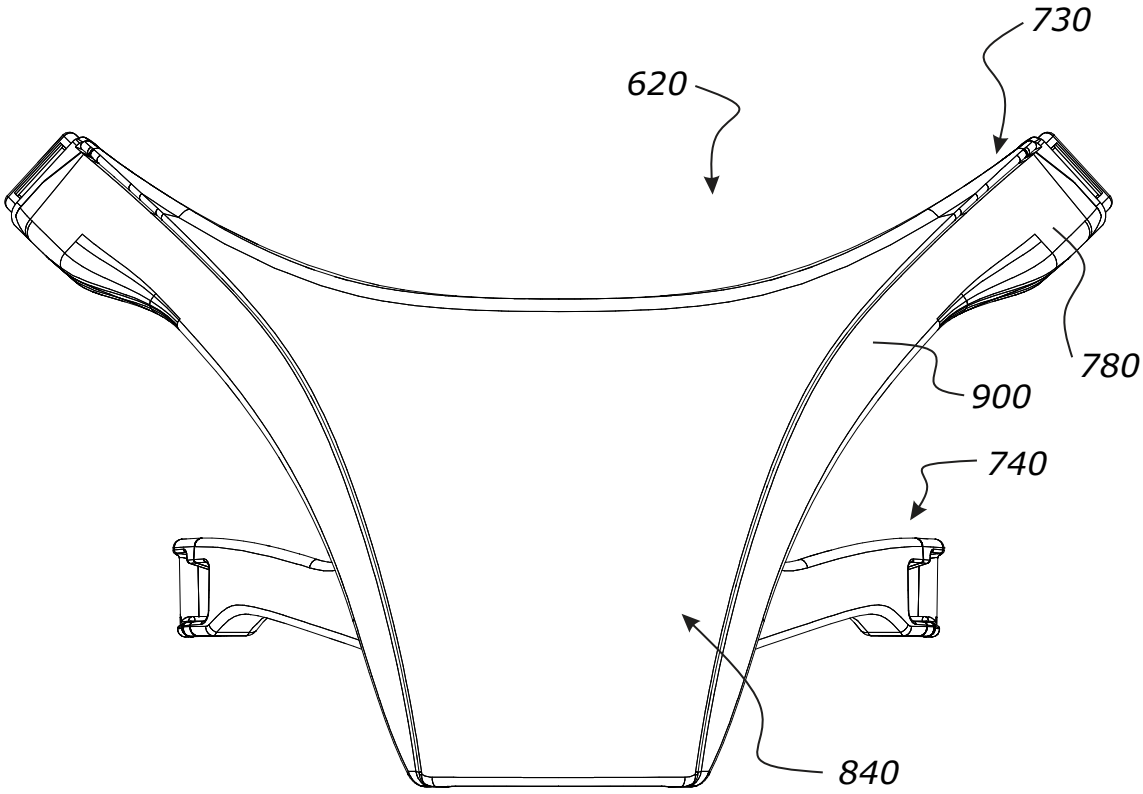

FIG. 39A

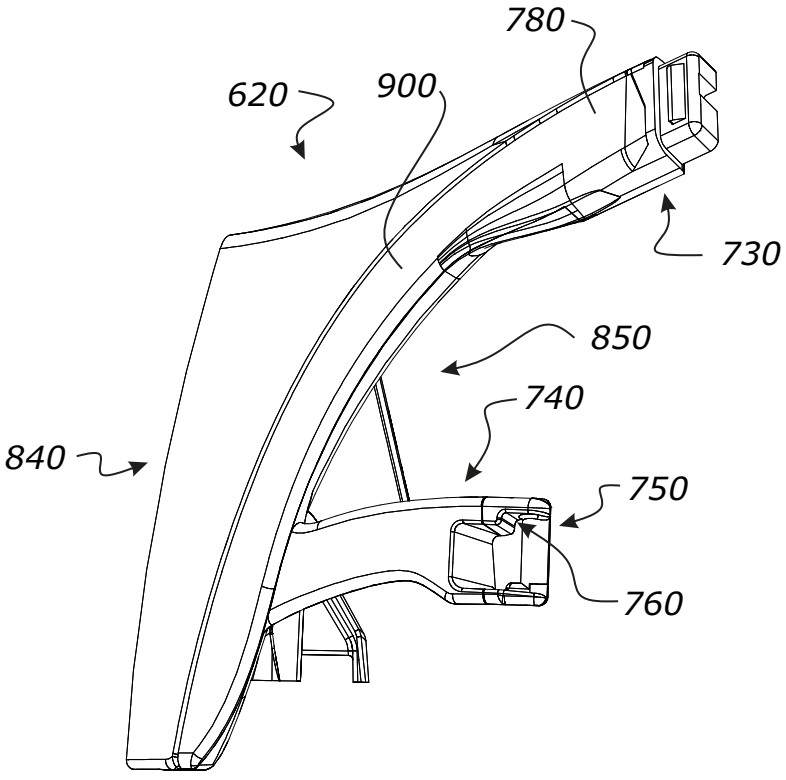

FIG. 39B

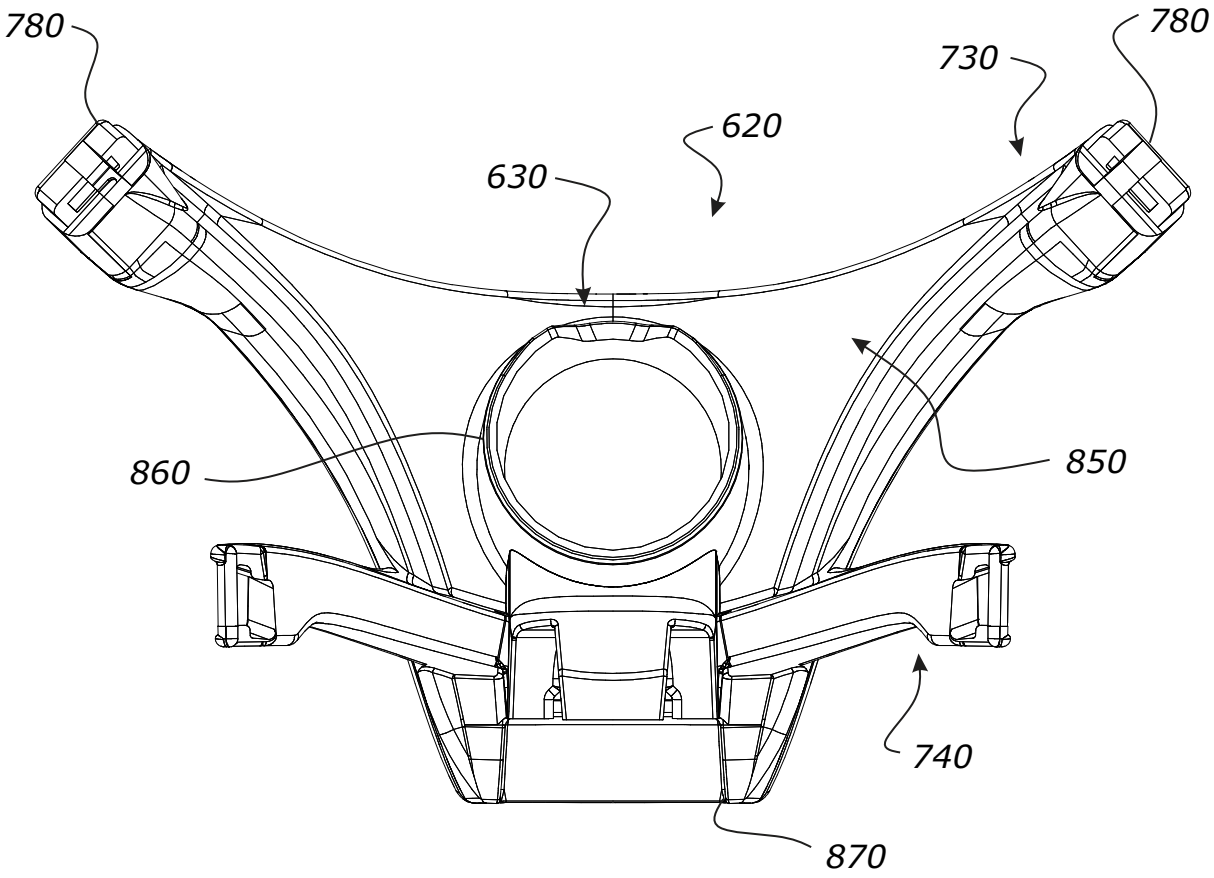

FIG. 39C

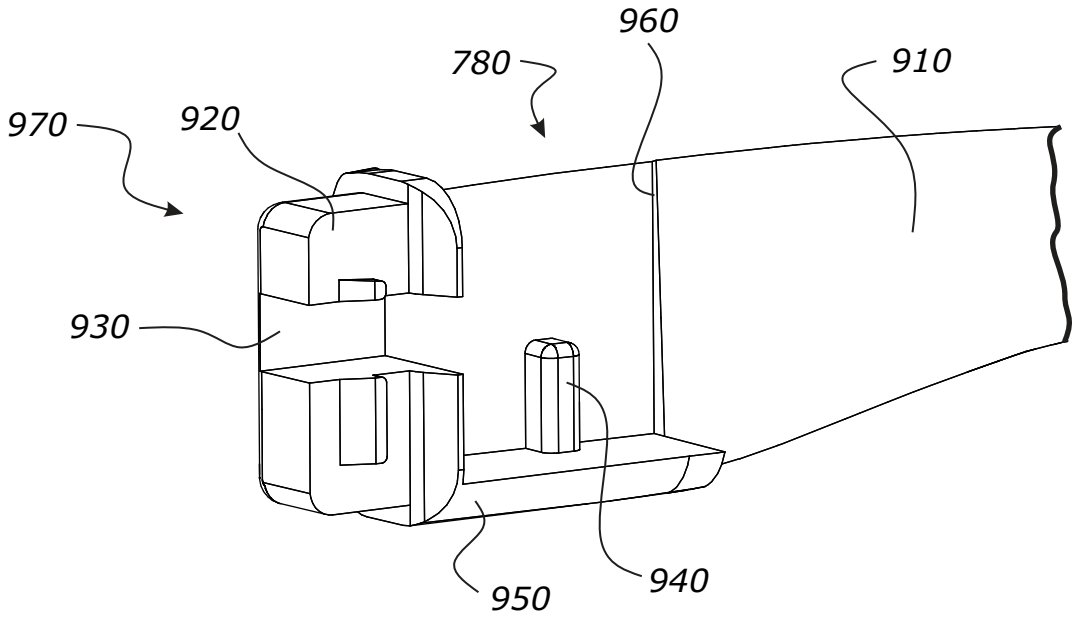
960
780
910
970
920
930
940
950

FIG. 40

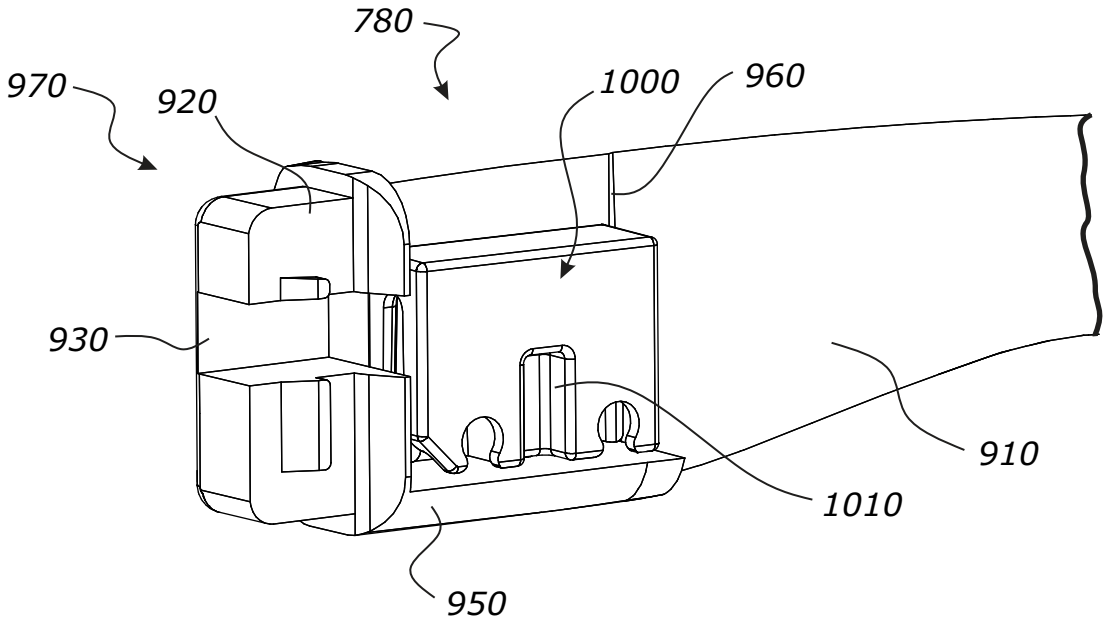
780
970
920
1000
960
930
910
1010
950

FIG. 41

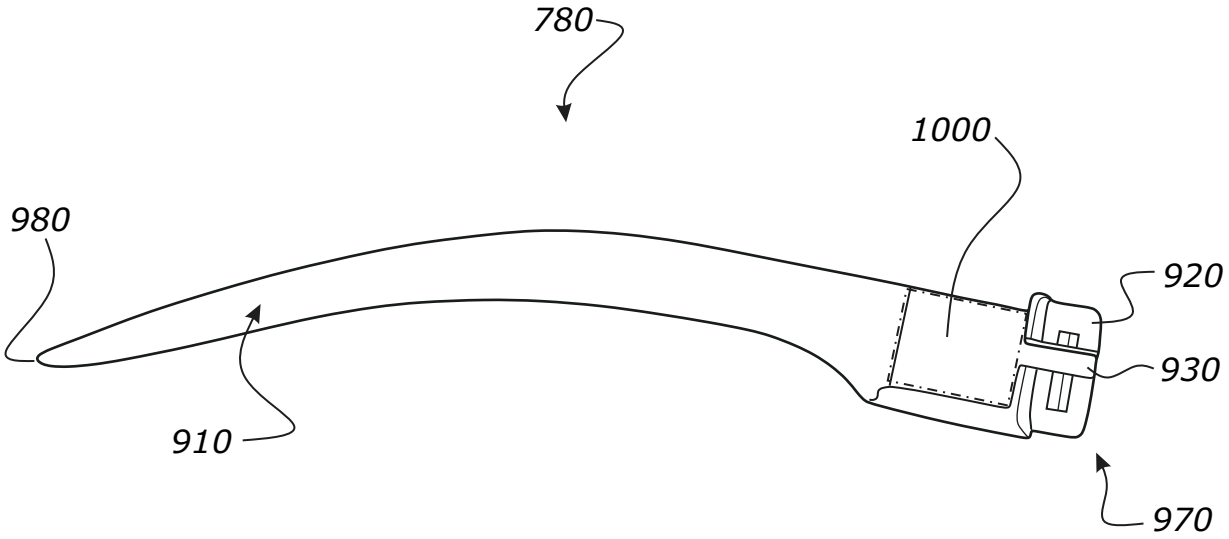

FIG. 42

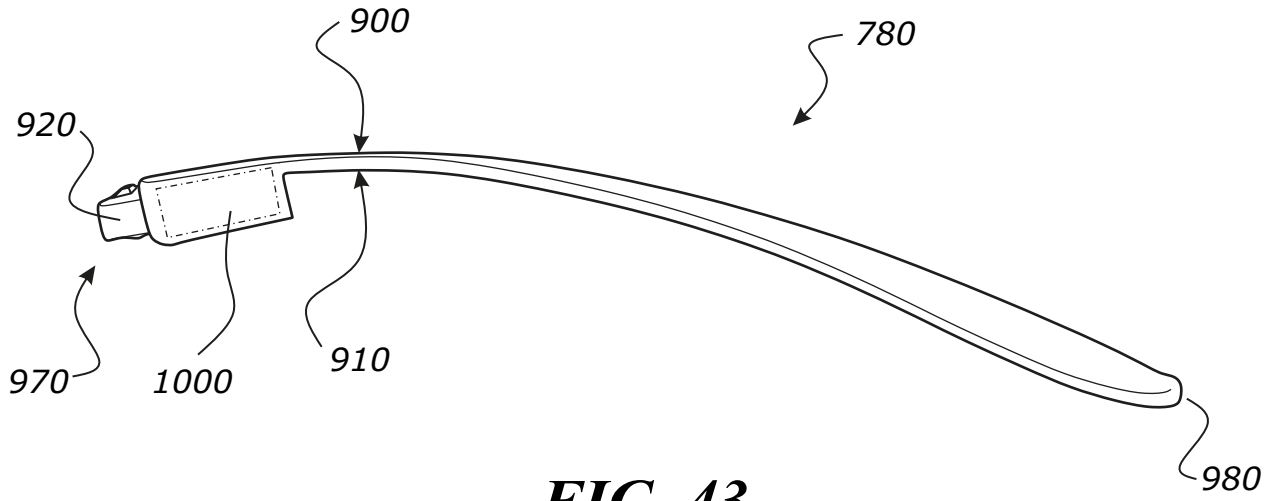

FIG. 43

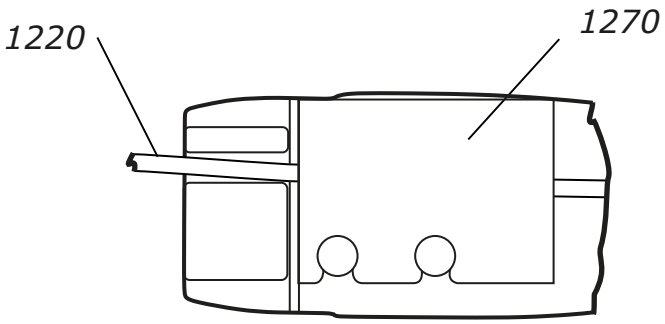

FIG. 44A

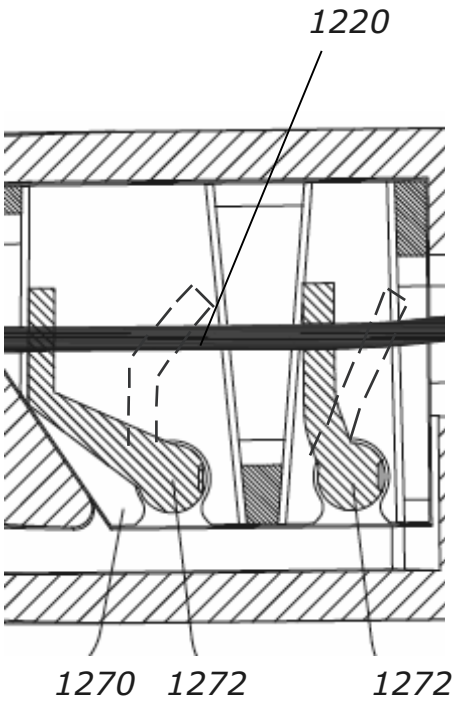

FIG. 44B

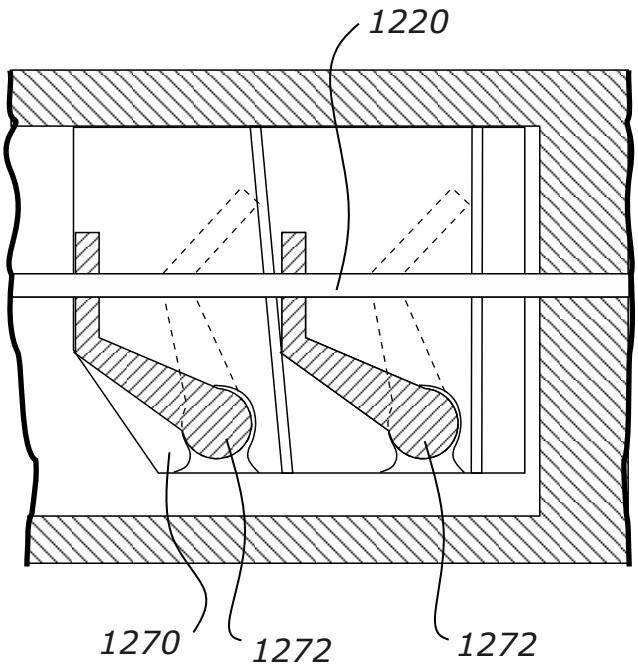

FIG. 44C

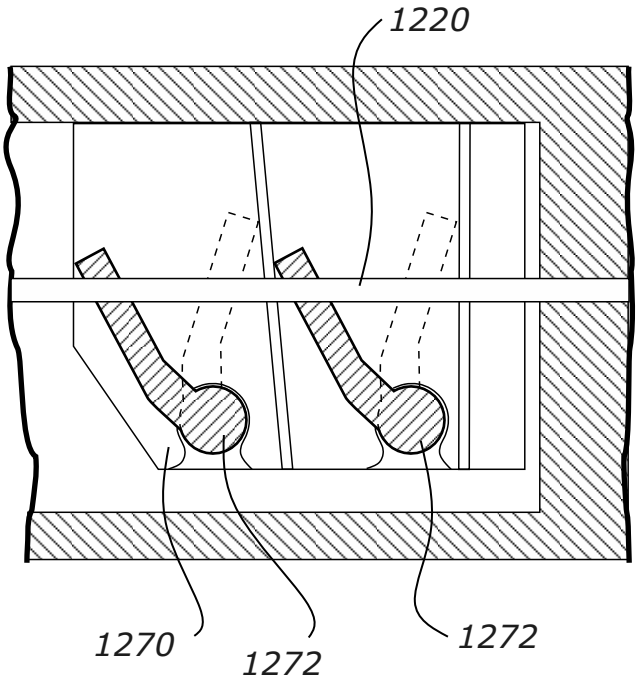

FIG. 44D