(12) INTERNATIONAL APPLICATION PUBLISHED UNDER THE PATENT COOPERATION TREATY (PCT)

(19) World Intellectual Property Organization
International Bureau

(43) International Publication Date
28 September 2023 (28.09.2023)

WIPO | PCT

(10) International Publication Number
WO 2023/183107 A1

(51) International Patent Classification:
H01L 21/683 (2006.01) *C23C 16/458* (2006.01)
H01L 21/687 (2006.01)

(21) International Application Number:
PCT/US2023/013516

(22) International Filing Date:
21 February 2023 (21.02.2023)

(25) Filing Language: English

(26) Publication Language: English

(30) Priority Data:
17/700,203 21 March 2022 (21.03.2022) US

(71) Applicant: **APPLIED MATERIALS, INC.** [US/US]; 3050 Bowers Avenue, Santa Clara, CA 95054 (US).

(72) Inventor: **PARKHE, Vijay, D.**; 4054 Bouquet Park Lane, San Jose, CA 95135 (US).

(74) Agent: **BERNADICOU, Michael, A.** et al.; Schwabe, Williamson & Wyatt, P.C., 1211 SW 5th Avenue, Suite 1900, Portland, OR 97204 (US).

(81) Designated States *(unless otherwise indicated, for every kind of national protection available)*: AE, AG, AL, AM, AO, AT, AU, AZ, BA, BB, BG, BH, BN, BR, BW, BY, BZ, CA, CH, CL, CN, CO, CR, CU, CV, CZ, DE, DJ, DK, DM, DO, DZ, EC, EE, EG, ES, FI, GB, GD, GE, GH, GM, GT, HN, HR, HU, ID, IL, IN, IQ, IR, IS, IT, JM, JO, JP, KE, KG, KH, KN, KP, KR, KW, KZ, LA, LC, LK, LR, LS, LU, LY, MA, MD, MG, MK, MN, MW, MX, MY, MZ, NA, NG, NI, NO, NZ, OM, PA, PE, PG, PH, PL, PT, QA, RO, RS, RU, RW, SA, SC, SD, SE, SG, SK, SL, ST, SV, SY, TH, TJ, TM, TN, TR, TT, TZ, UA, UG, US, UZ, VC, VN, WS, ZA, ZM, ZW.

(84) Designated States *(unless otherwise indicated, for every kind of regional protection available)*: ARIPO (BW, CV, GH, GM, KE, LR, LS, MW, MZ, NA, RW, SC, SD, SL, ST, SZ, TZ, UG, ZM, ZW), Eurasian (AM, AZ, BY, KG, KZ, RU, TJ, TM), European (AL, AT, BE, BG, CH, CY, CZ, DE, DK, EE, ES, FI, FR, GB, GR, HR, HU, IE, IS, IT, LT, LU, LV, MC, ME, MK, MT, NL, NO, PL, PT, RO, RS, SE, SI, SK, SM, TR), OAPI (BF, BJ, CF, CG, CI, CM, GA, GN, GQ, GW, KM, ML, MR, NE, SN, TD, TG).

Published:
— *with international search report (Art. 21(3))*

(54) **Title:** ELECTROSTATIC CHUCK WITH LASER-MACHINED MESAS

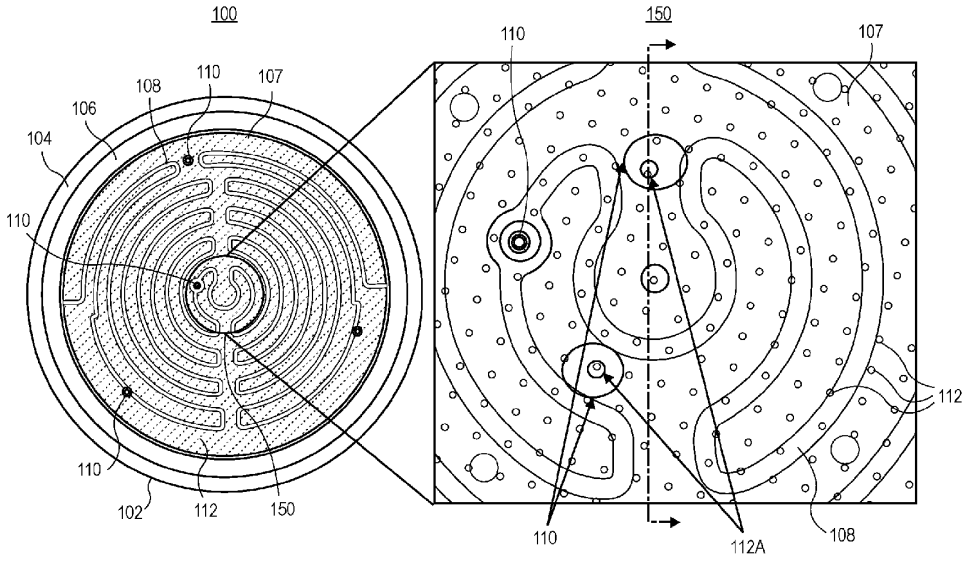

FIG. 1A

(57) **Abstract:** Electrostatic chucks (ESCs) for reactor or plasma processing chambers, and methods of fabricating ESCs, are described. In an example, a method of fabricating a substrate support assembly includes providing a ceramic top plate having a top surface with a processing region. A plurality of mesas is formed within the processing region and on the top surface of the ceramic plate. Laser-machining of one or more of the plurality of mesas is performed to reduce or to increase a surface roughness of the one or more of the plurality of mesas.

WO 2023/183107 A1