1) Figure-1: Radar system architecture

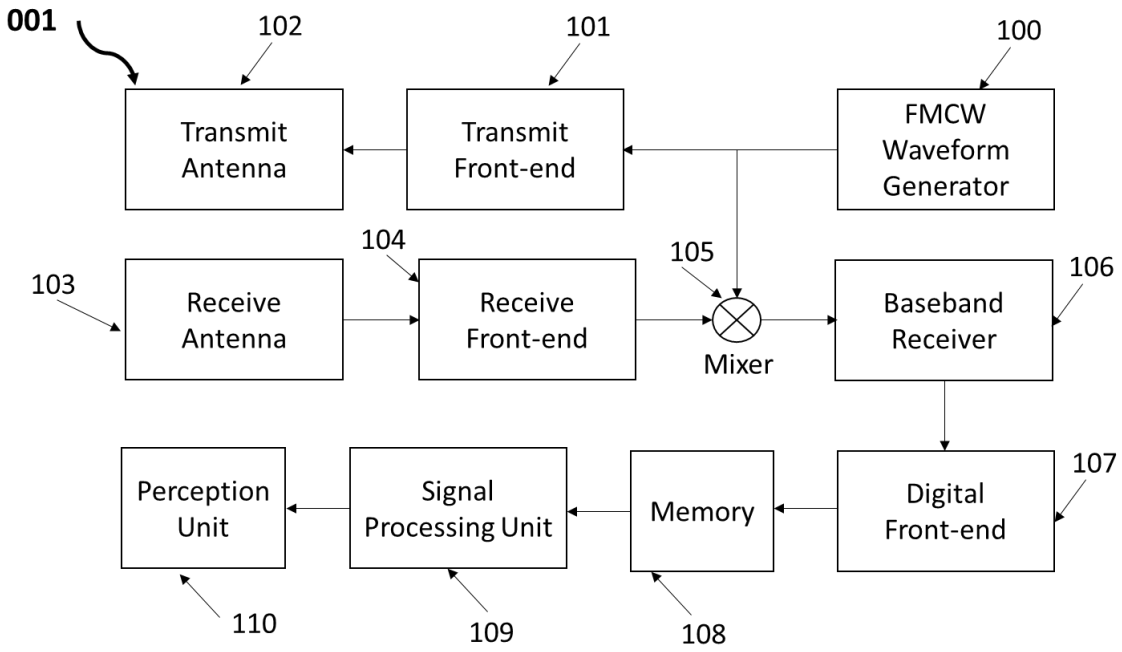

Figure-1: radar system architecture

2) Figure-2: Transmitting and receiving antenna array

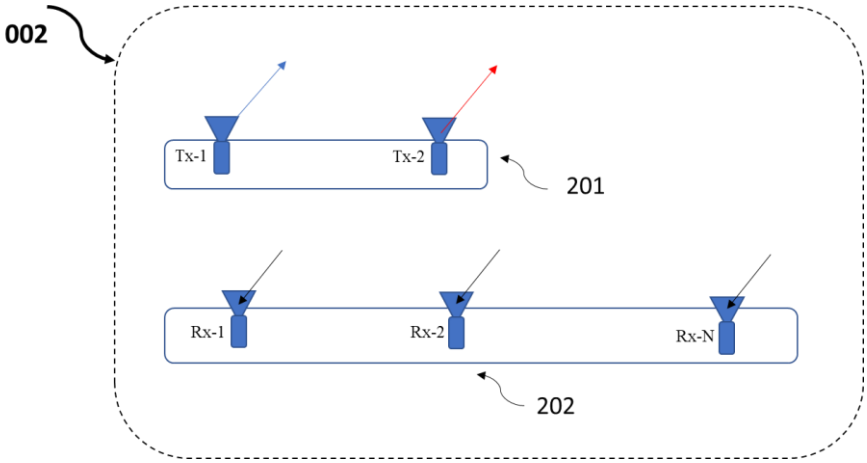

Figure-2: Transmitting and receiving antenna array configuration

3) Figure-3: TDM FMCW waveform scheduling for Doppler ambiguity resolution

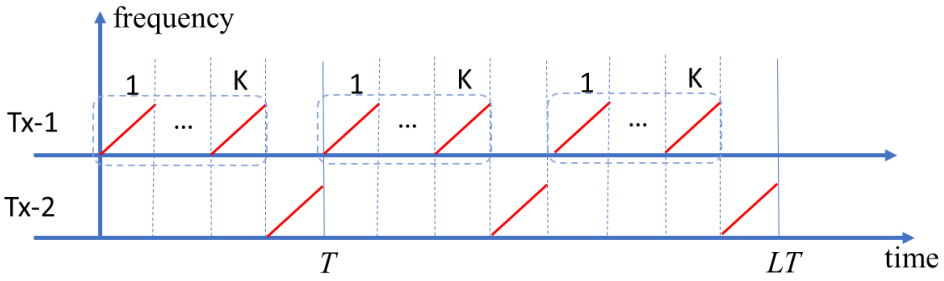

Figure-3 waveform transmit scheme for TDM Doppler ambiguity resolution (illustrated with two Transmit antennas)

4) Figure-4: Overall processing flowchart

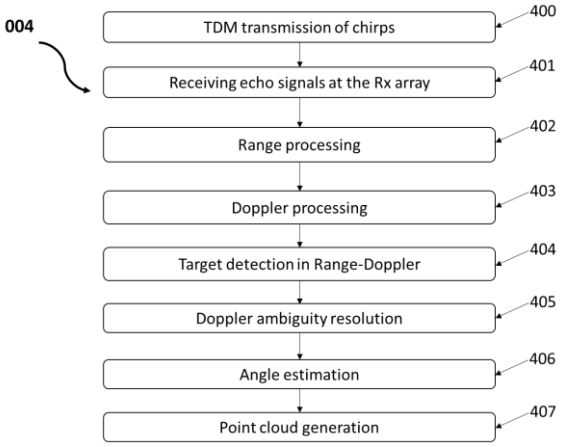

Figure-4: Overall processing flowchart

5) Figure-5: Doppler ambiguity resolution

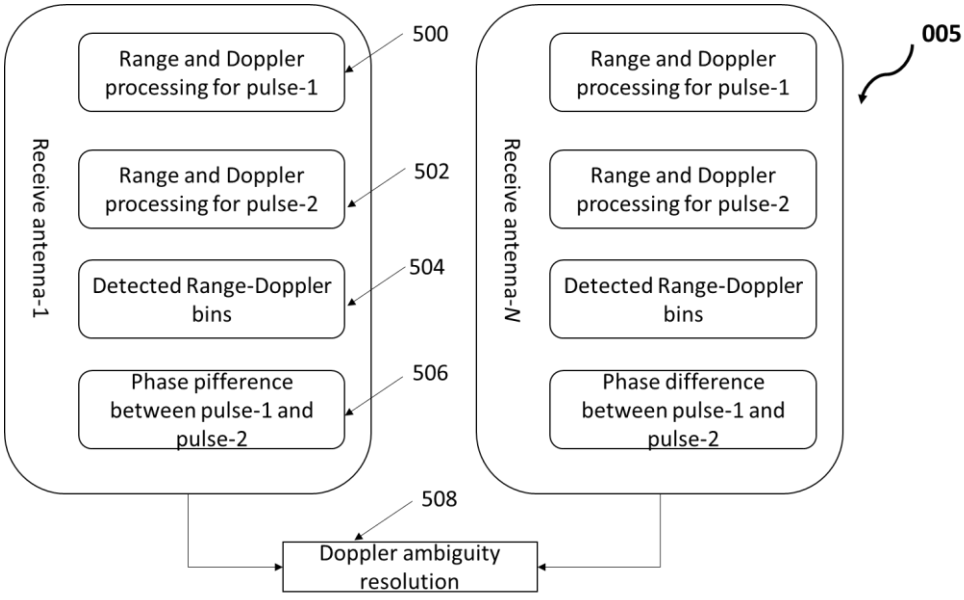

Figure-5: Doppler ambiguity resolution processing

1) In Figure-2, the transmit and receive array design can be changed according to requirements of practical applications.
2) In Figure-3, the TDM waveform scheduling scheme can be modified in such ways as i) changing the value of K, ii) adopt the pulsing scheme of transmitter-1 at different transmitters with different value of K.
3) In Figure-5, when the transmitting scheme is changed, the Doppler ambiguity resolution needs to change accordingly in order to make use of all the information from all the transmitters.
4) In Figure-5, the phase difference computation can be replaced spectrum analysis techniques such as MUSIC, FFT when the number of pulses K is larger than 2.
5) In Figure-1, the waveform generator can be changed to generate other type of waveforms. In this case the mixer and receiver could be changed accordingly.