FIG. 1

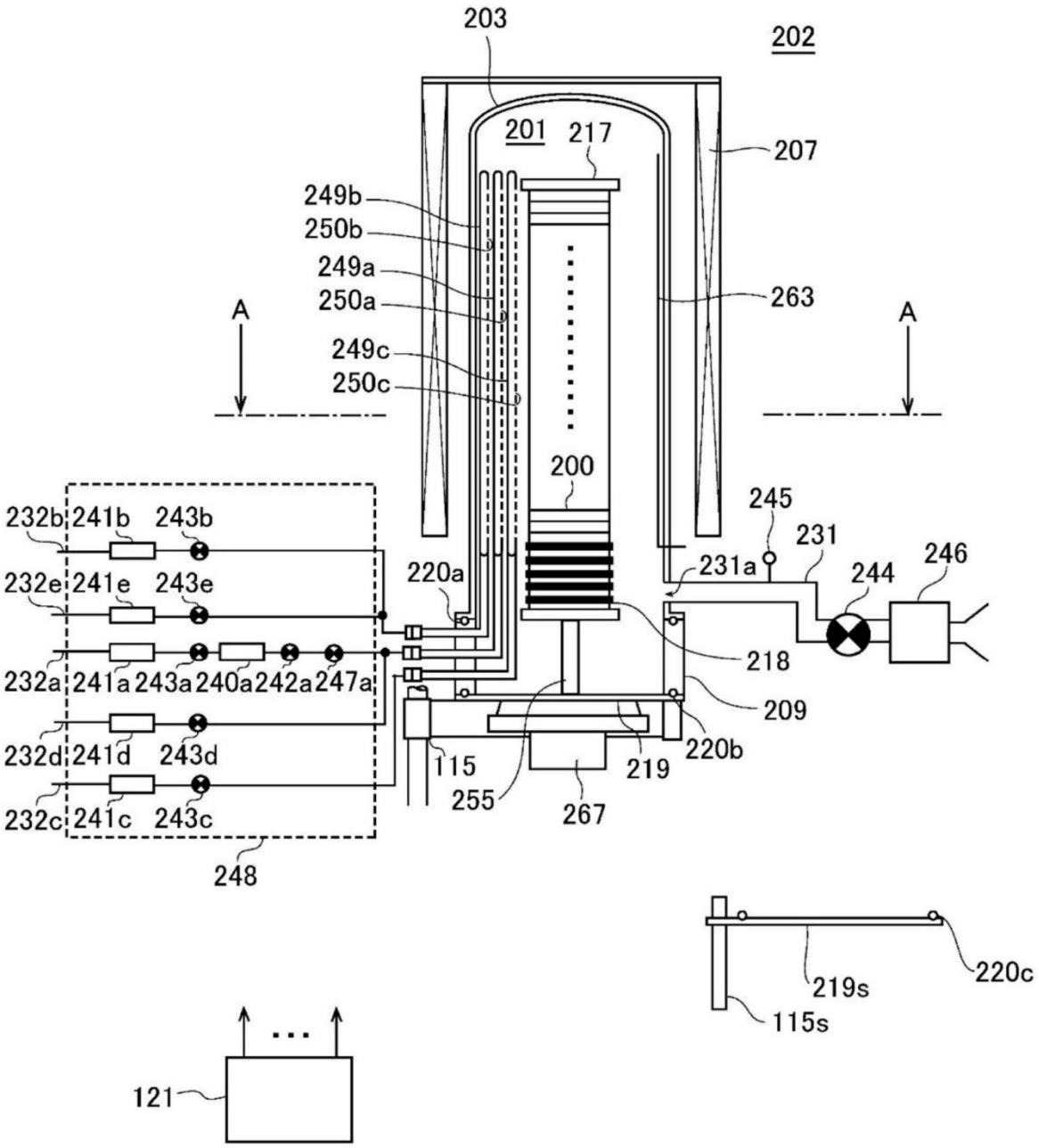
203
202
201
217
207
249b
250b
249a
250a
263
A
A
249c
250c
200
245
231
246
232b
241b
243b
231a
244
232e
241e
243e
220a
218
232a
241a
243a
240a
242a
247a
209
232d
241d
243d
220b
115
219
255
267
232c
241c
243c
248
220c
219s
115s
121

FIG. 2

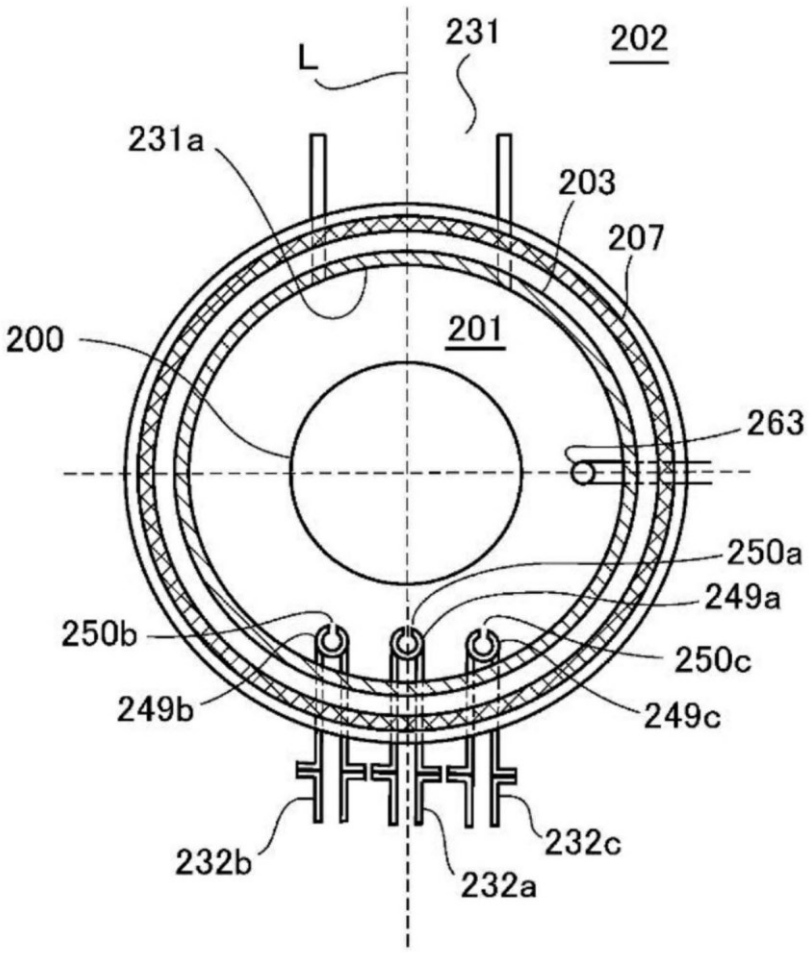
L
231
202
231a
203
207
200
201
263
250a
249a
250b
250c
249b
249c
232b
232c
232a

FIG. 3

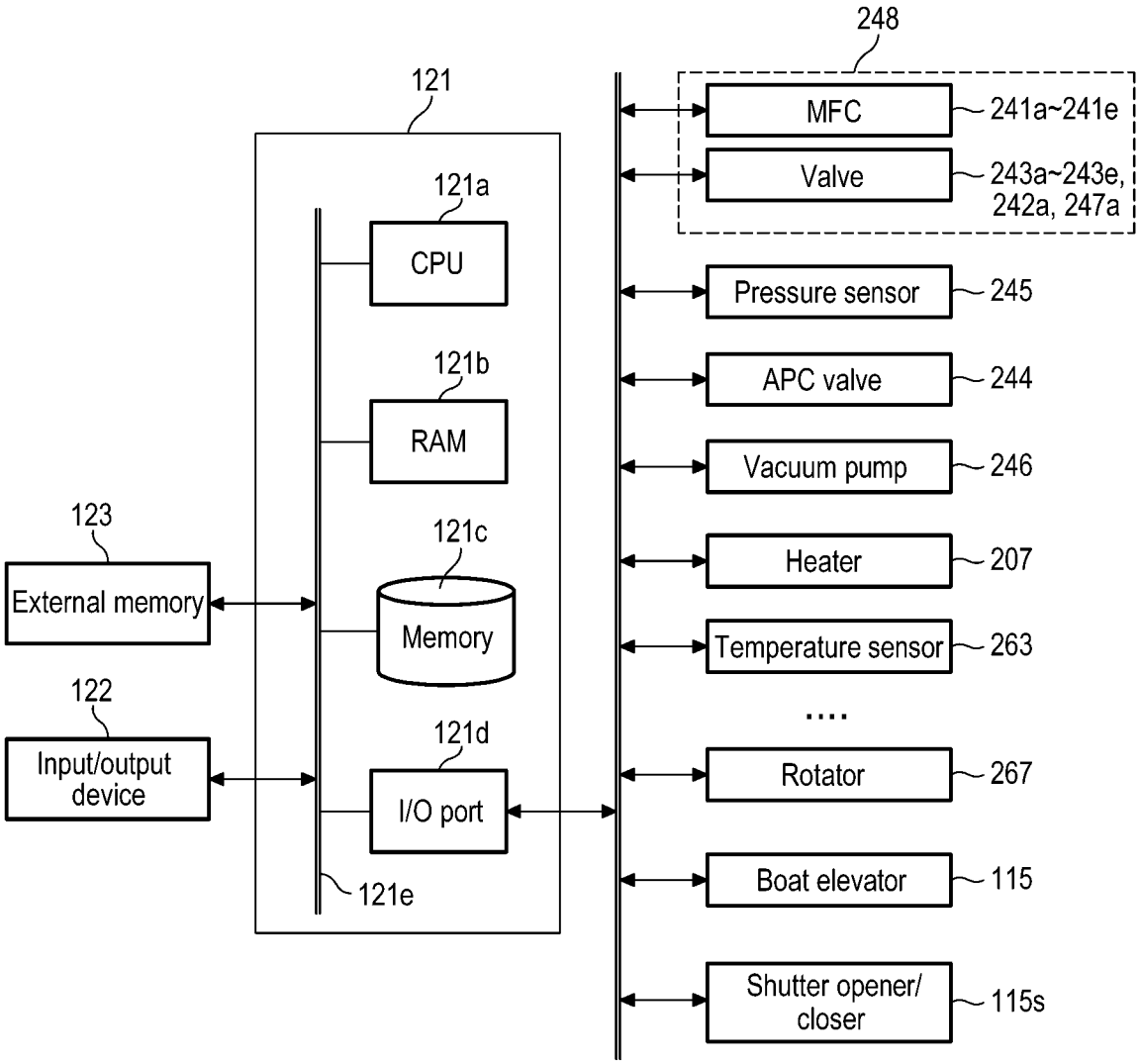
248
121
MFC
241a~241e
Valve
243a~243e,
242a, 247a
121a
CPU
Pressure sensor
245
121b
RAM
APC valve
244
Vacuum pump
246
123
121c
Heater
207
External memory
Memory
Temperature sensor
263
122
....
121d
Input/output
device
I/O port
Rotator
267
Boat elevator
115
121e
Shutter opener/
closer
115s

FIG. 4

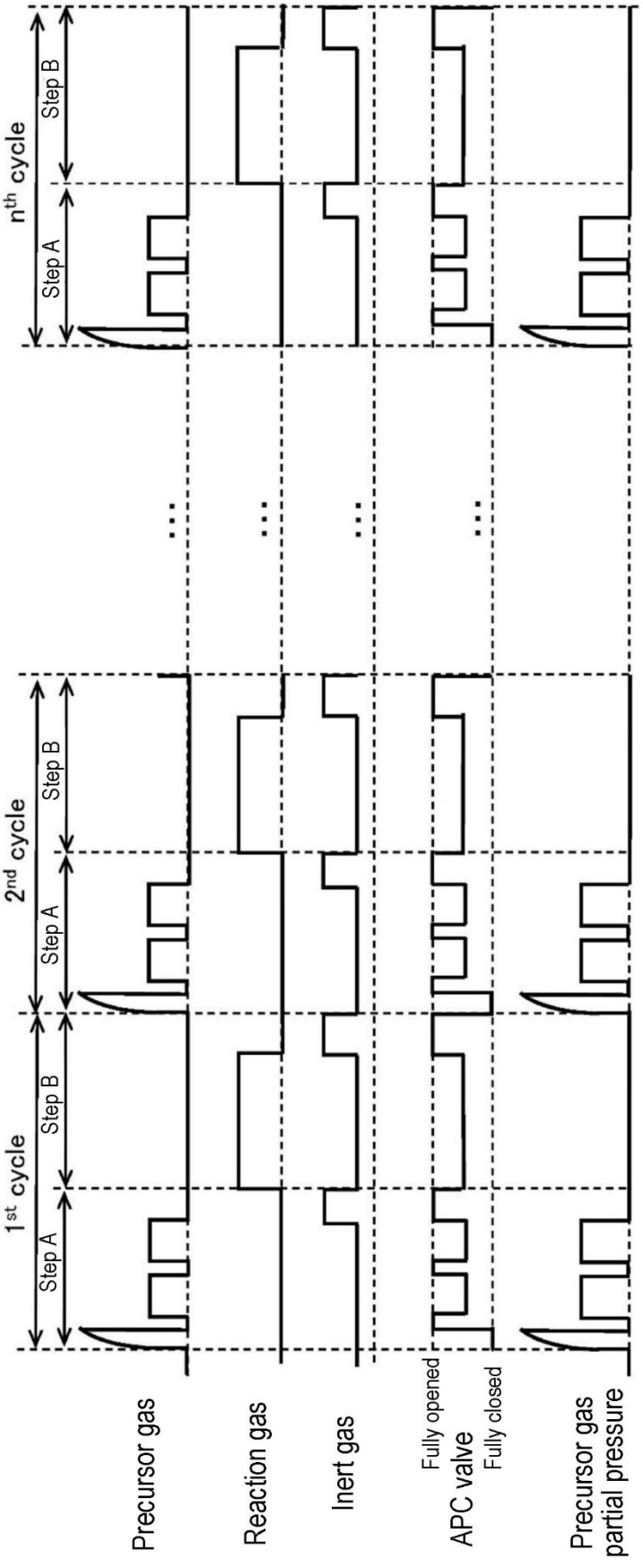
1st cycle
Step A
Step B
2nd cycle
Step A
Step B
nth cycle
Step A
Step B
Precursor gas
Reaction gas
Inert gas
Fully opened
APC valve
Fully closed
Precursor gas
partial pressure

FIG. 5A

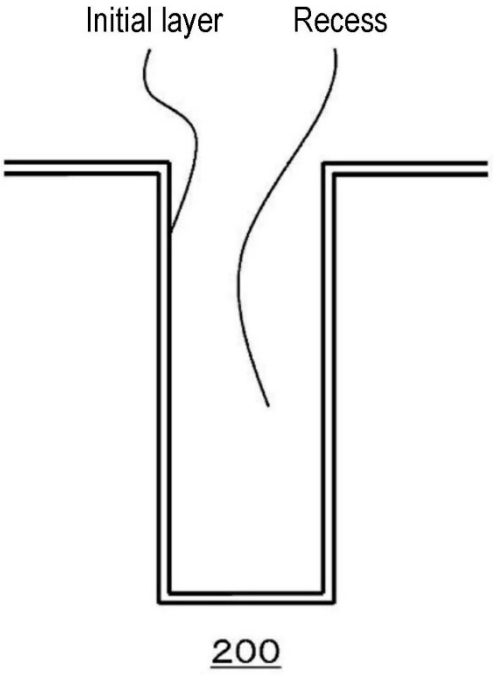

FIG. 5B

