FIG. 1

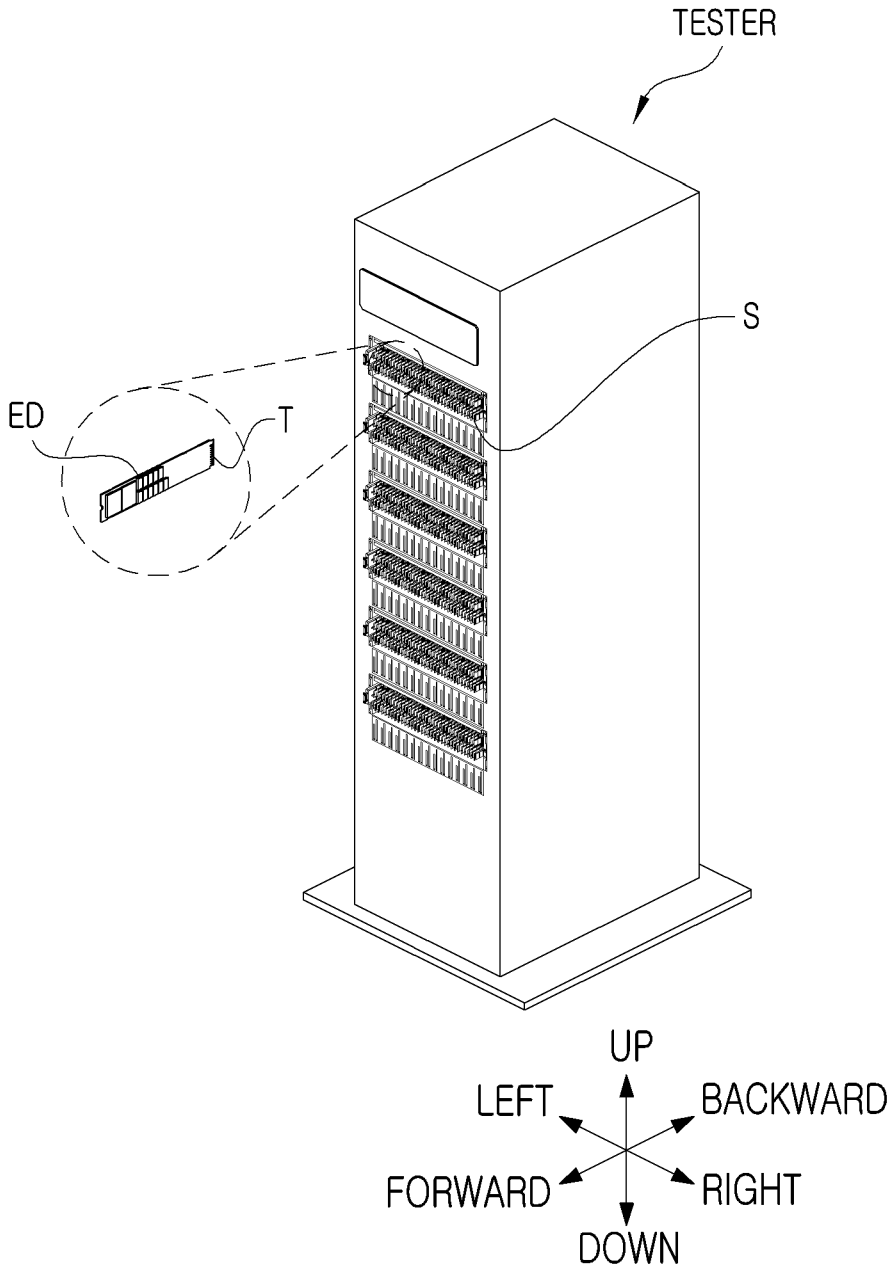

FIG. 2

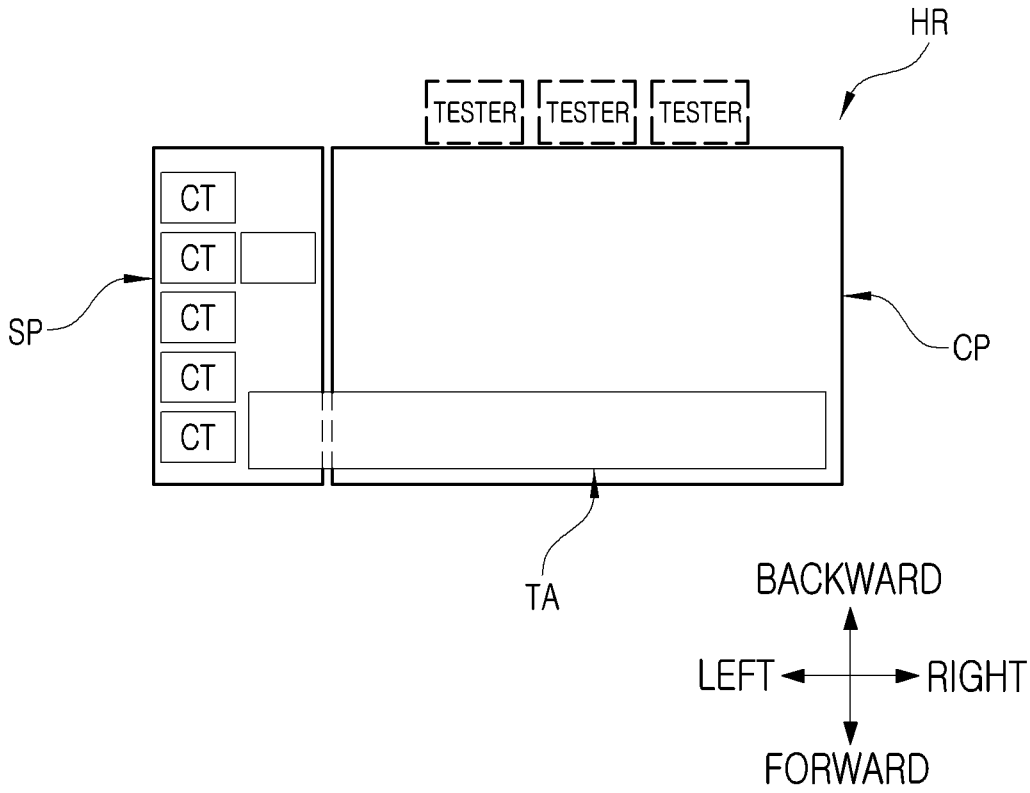
HR
TESTER
TESTER
TESTER
CT
CT
CT
CT
CT
SP
CP
TA
BACKWARD
LEFT
RIGHT
FORWARD

FIG. 3

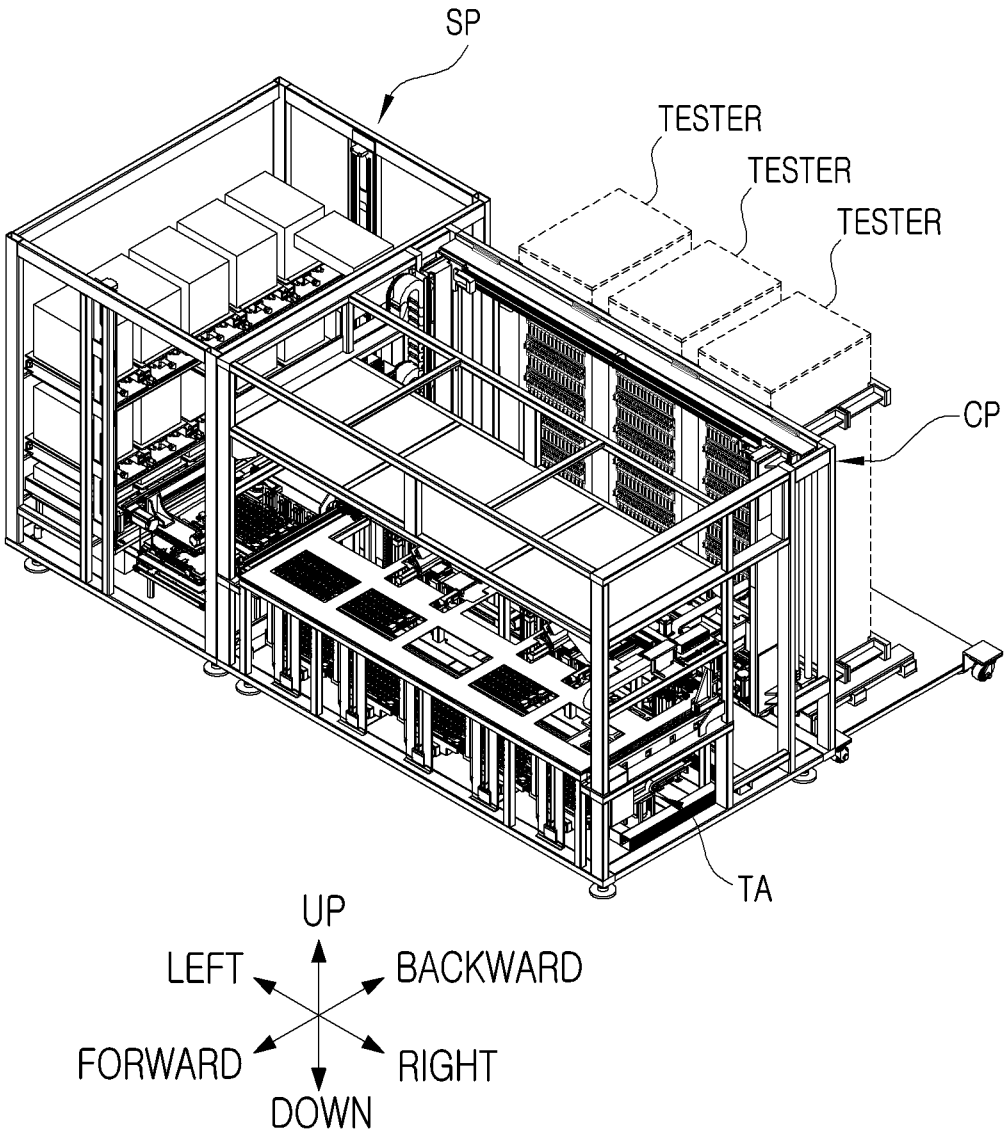
SP
TESTER
TESTER
TESTER
CP
TA
UP
LEFT
BACKWARD
FORWARD
RIGHT
DOWN

FIG. 4

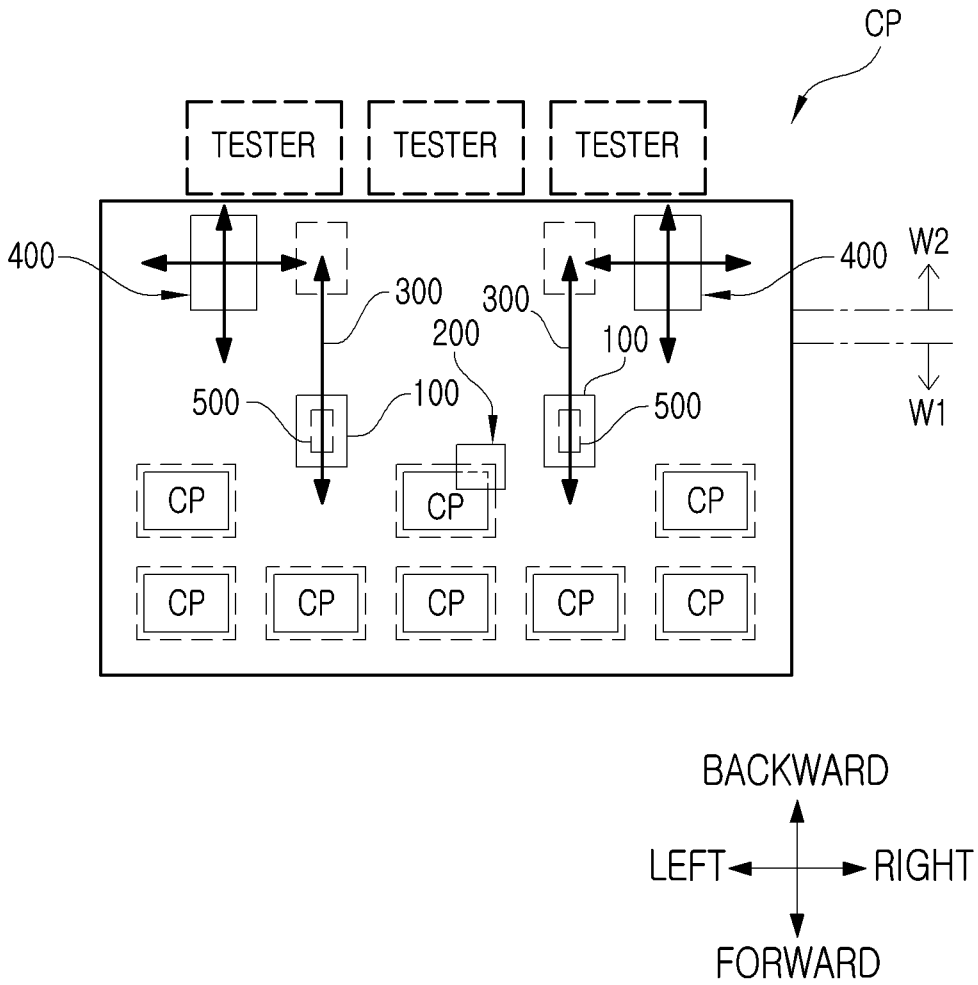
CP
TESTER
TESTER
TESTER
400
400
W2
300
300
200
100
100
500
500
W1
CP
CP
CP
CP
CP
CP
CP
CP
BACKWARD
LEFT
RIGHT
FORWARD

FIG. 5

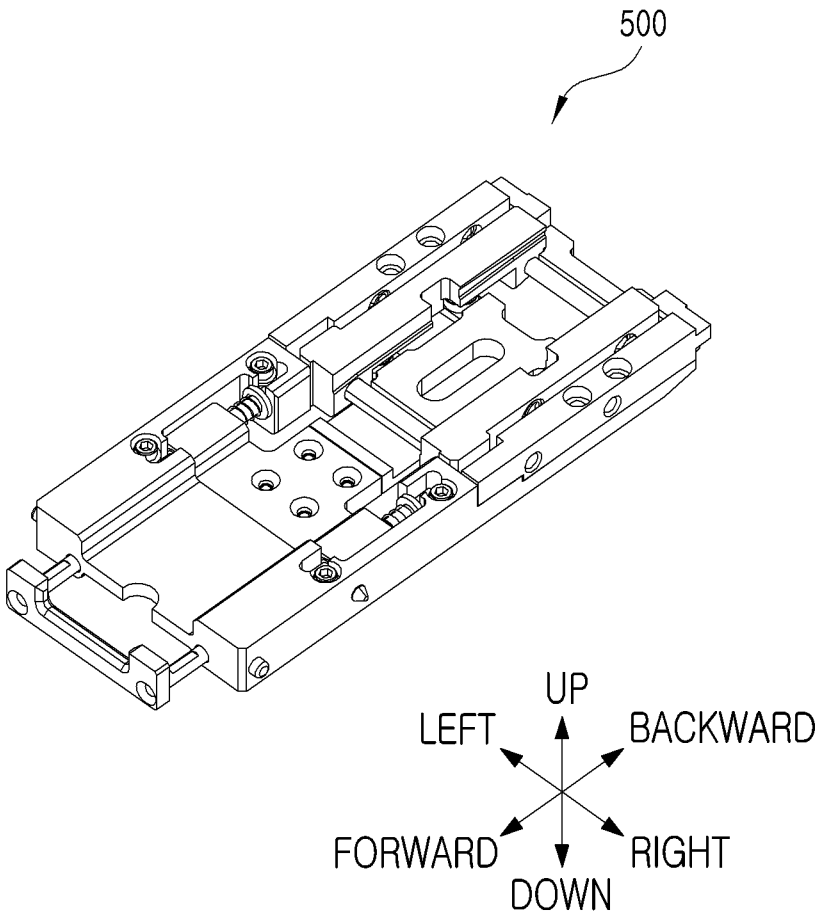

FIG. 6

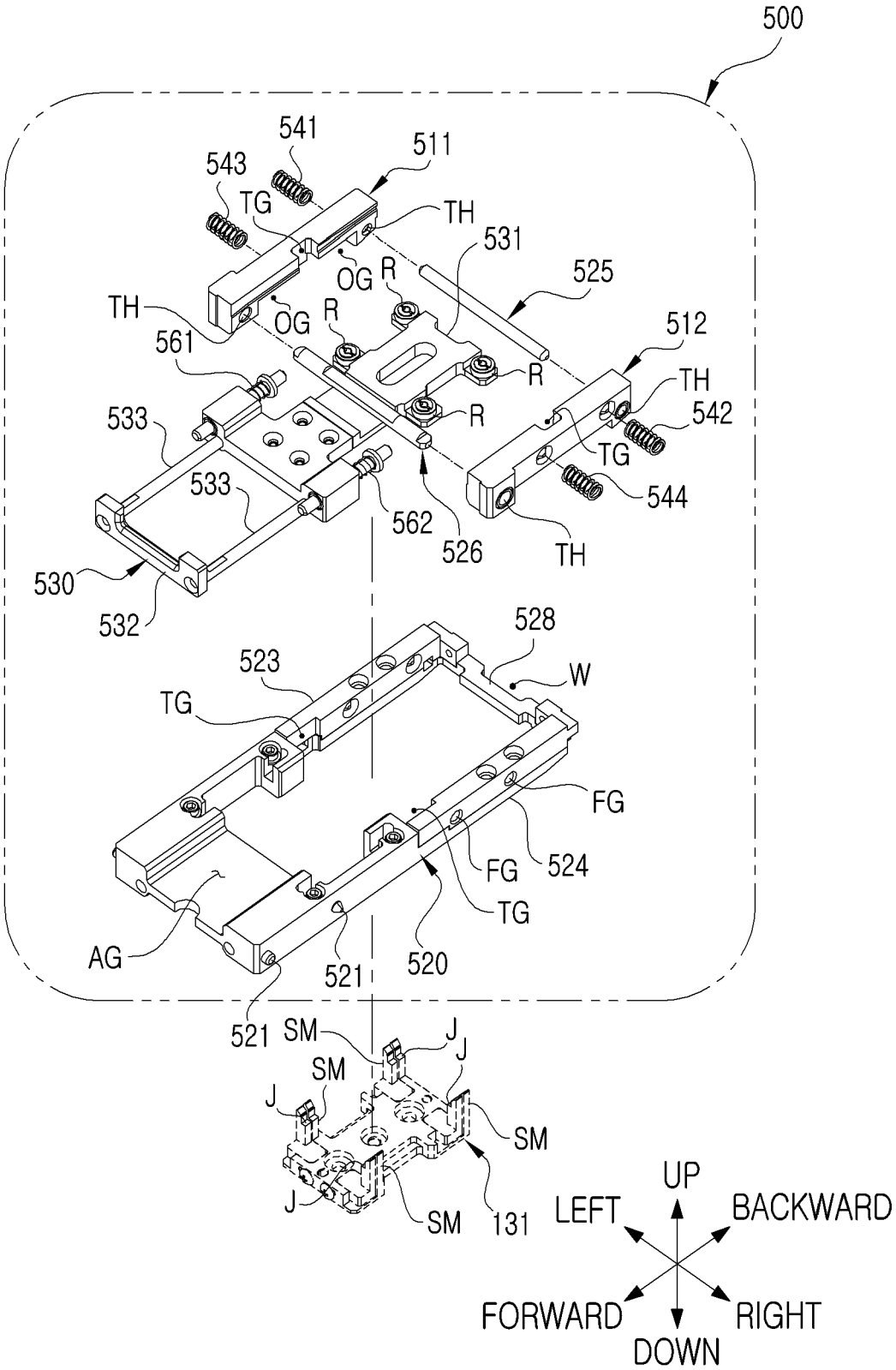
500
541
511
543
TG
TH
531
OG
R
525
TH
561
OG
R
512
R
TH
533
R
542
TG
533
544
562
526
TH
530
532
528
523
W
TG
FG
FG
524
TG
AG
521
520
521
SM
J
J
SM
J
SM
J
SM
131
UP
LEFT
BACKWARD
FORWARD
RIGHT
DOWN

FIG. 7

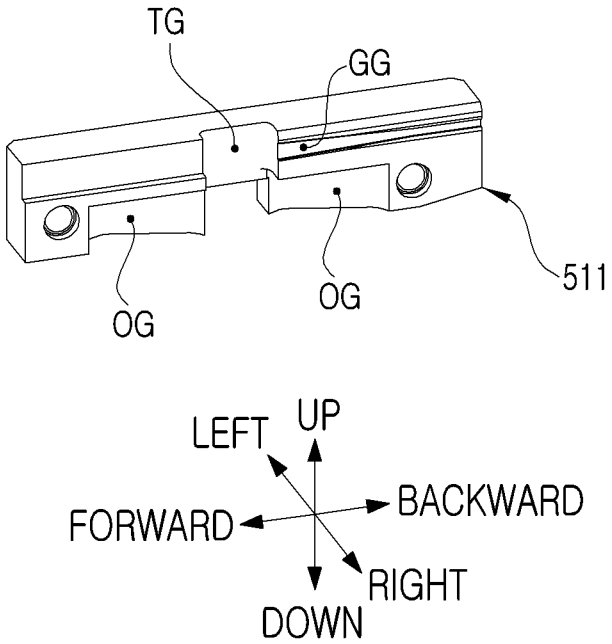

FIG. 8

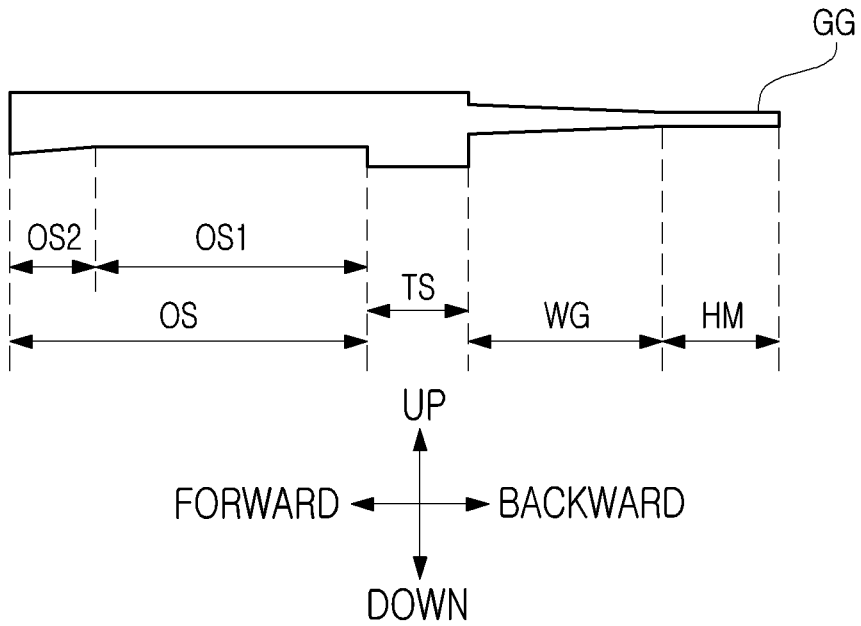

FIG. 9

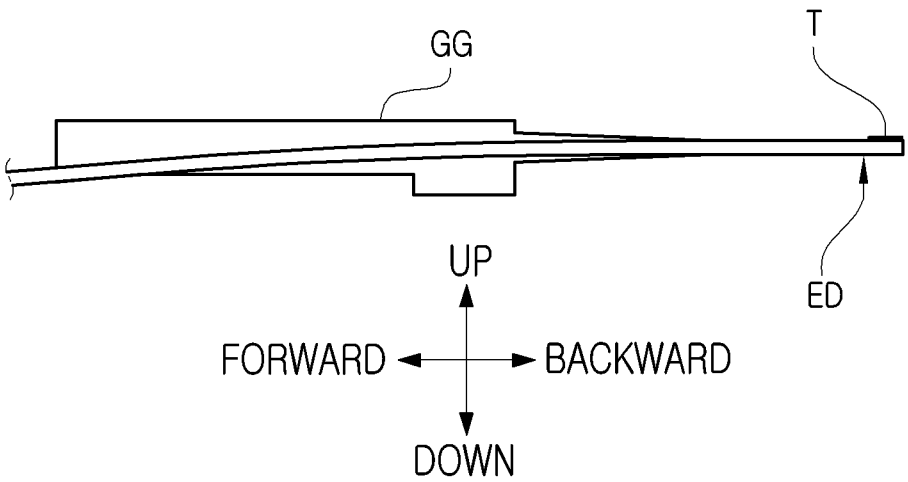

FIG. 10

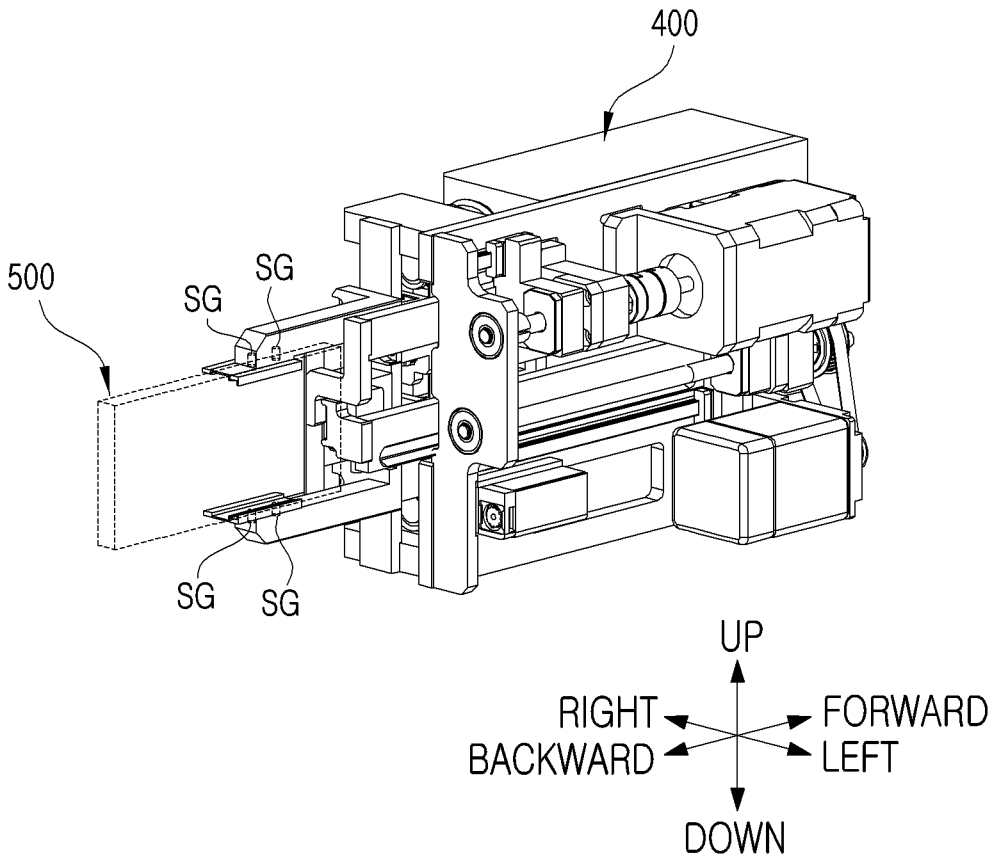

FIG. 11

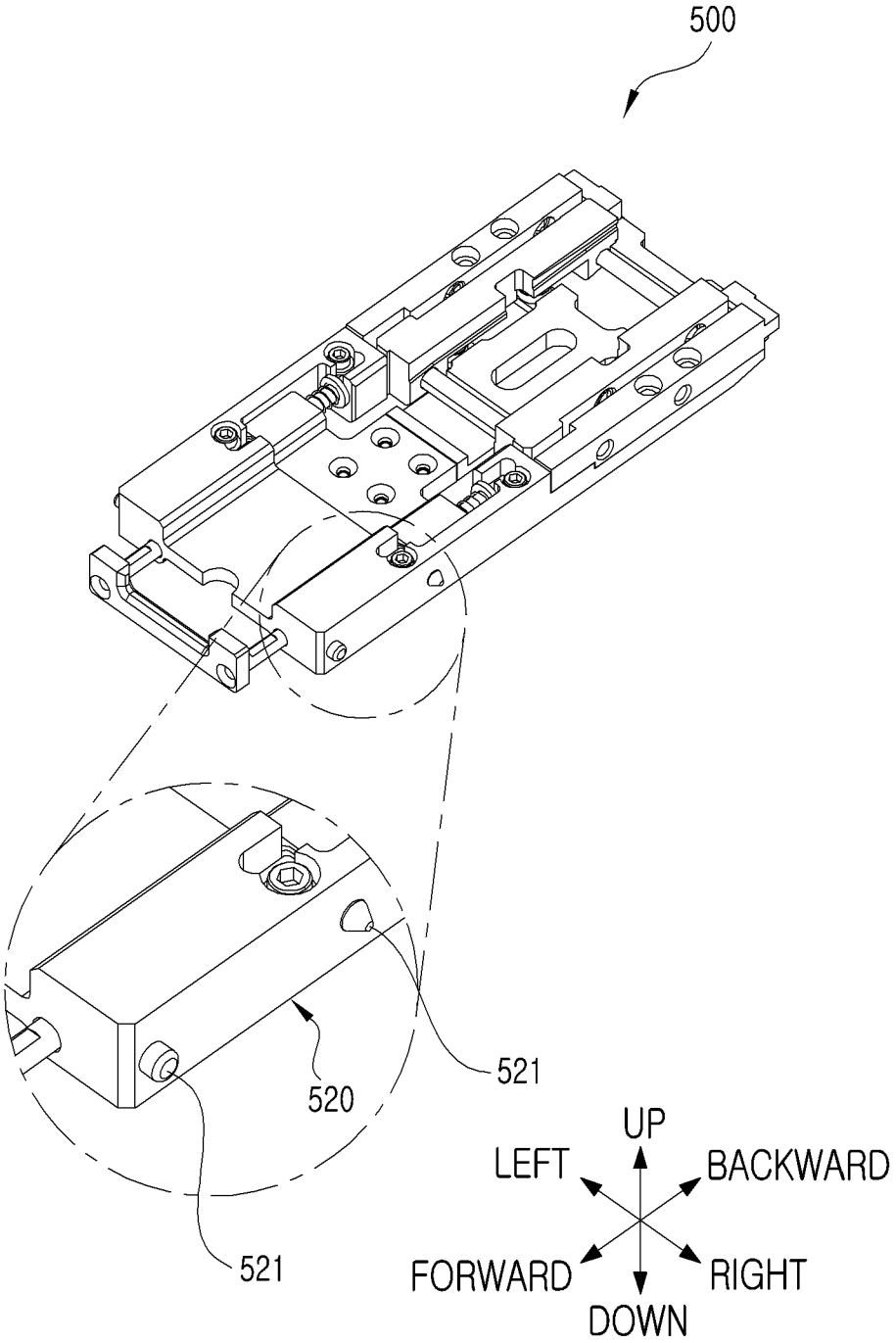

FIG. 12

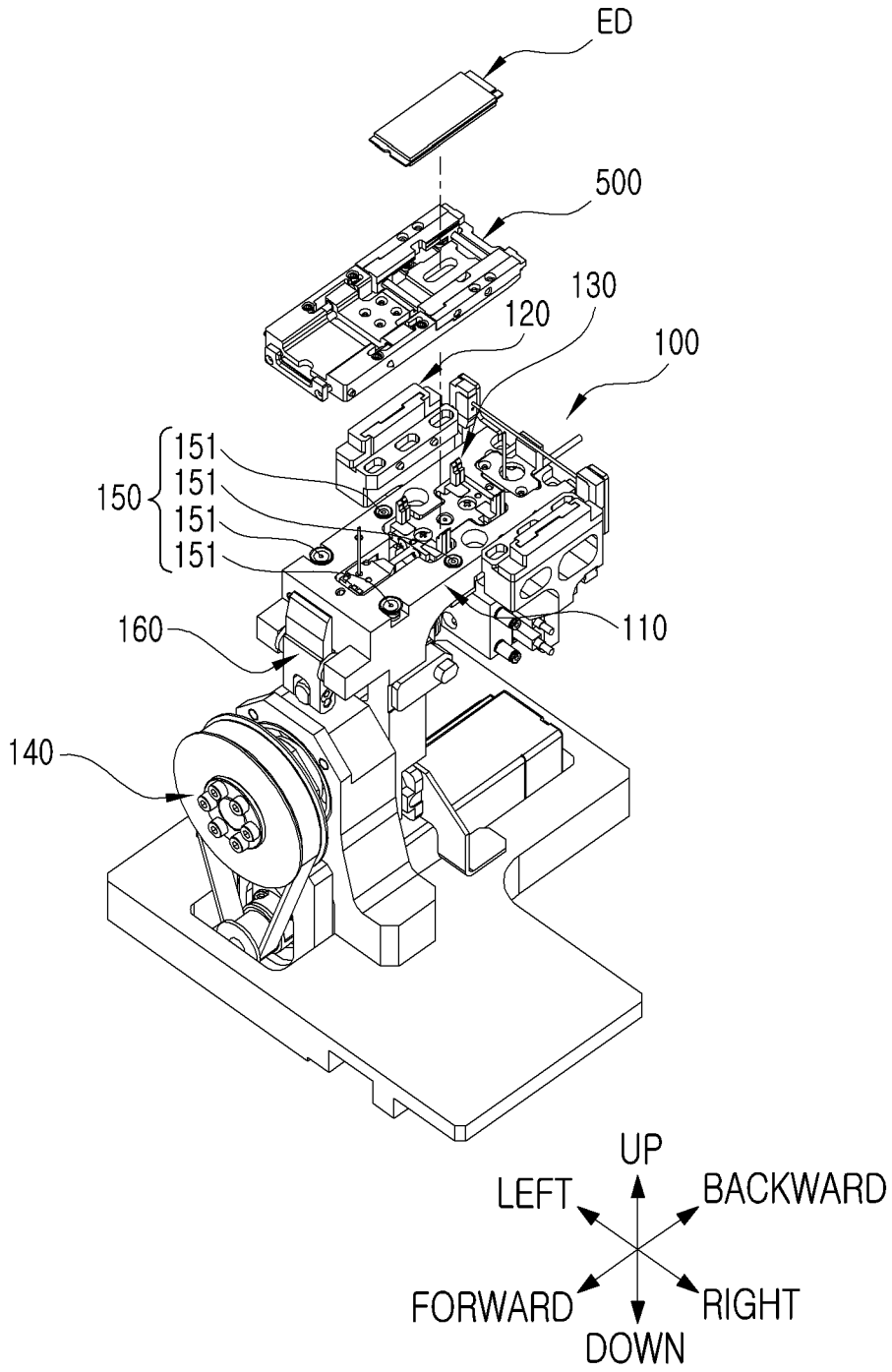
ED
500
130
120
100
150
151
151
151
151
160
110
140
UP
LEFT
BACKWARD
FORWARD
RIGHT
DOWN

FIG. 13

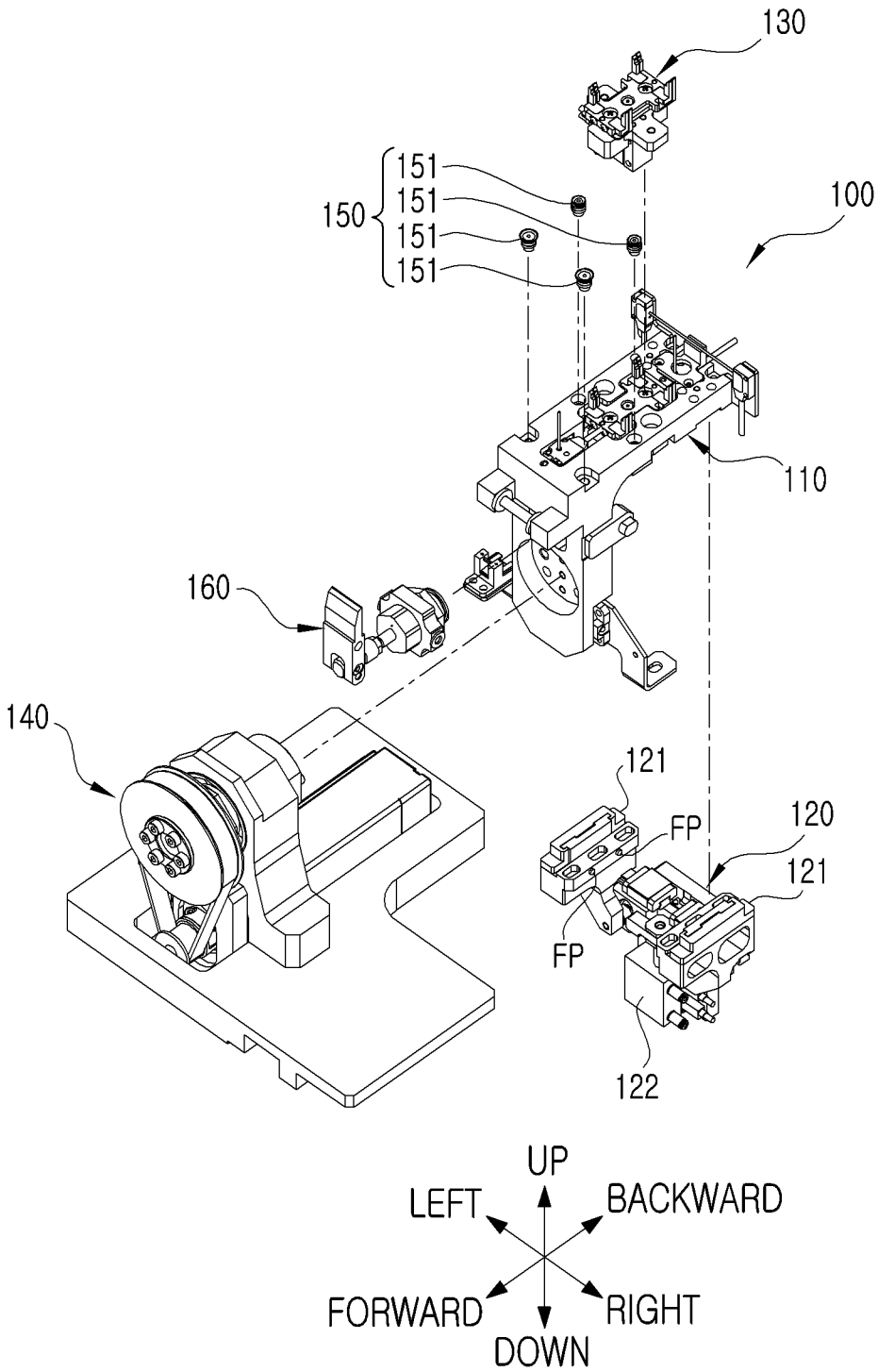
130
151
151
150
151
151
100
110
160
140
121
FP
120
121
FP
122
UP
LEFT
BACKWARD
FORWARD
RIGHT
DOWN

FIG. 14

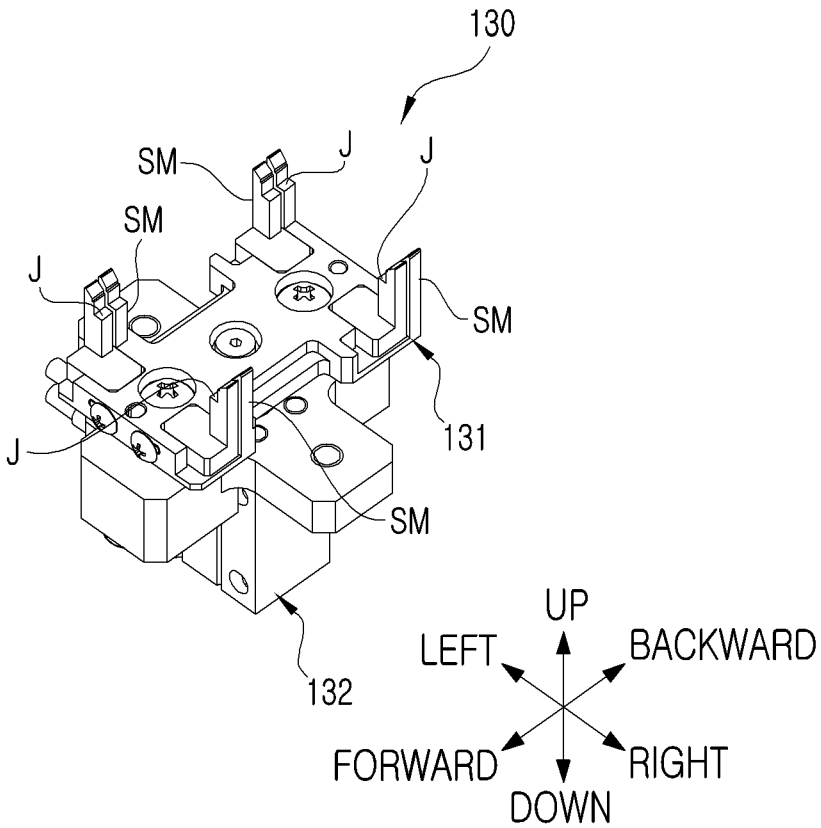
130
SM
J
J
SM
J
SM
131
J
SM
132
UP
LEFT
BACKWARD
FORWARD
RIGHT
DOWN

FIG. 15

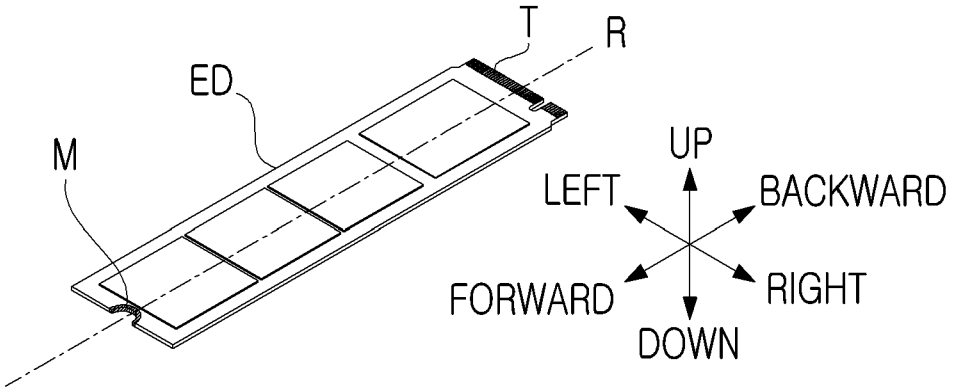
T
R
ED
M
UP
LEFT
BACKWARD
FORWARD
RIGHT
DOWN

(a)

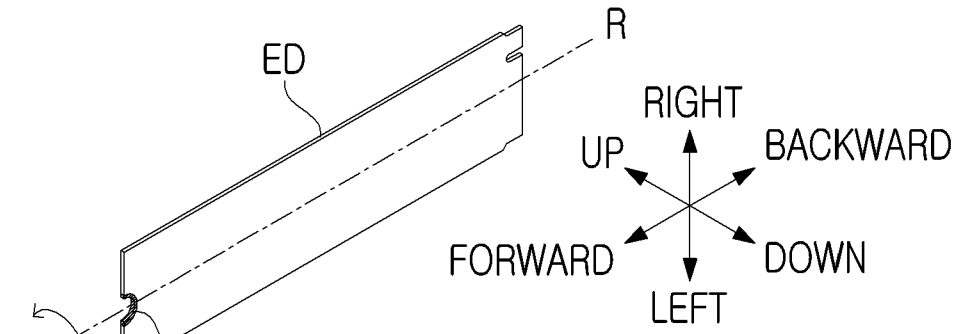
R
ED
RIGHT
UP
BACKWARD
FORWARD
DOWN
LEFT
M

(b)

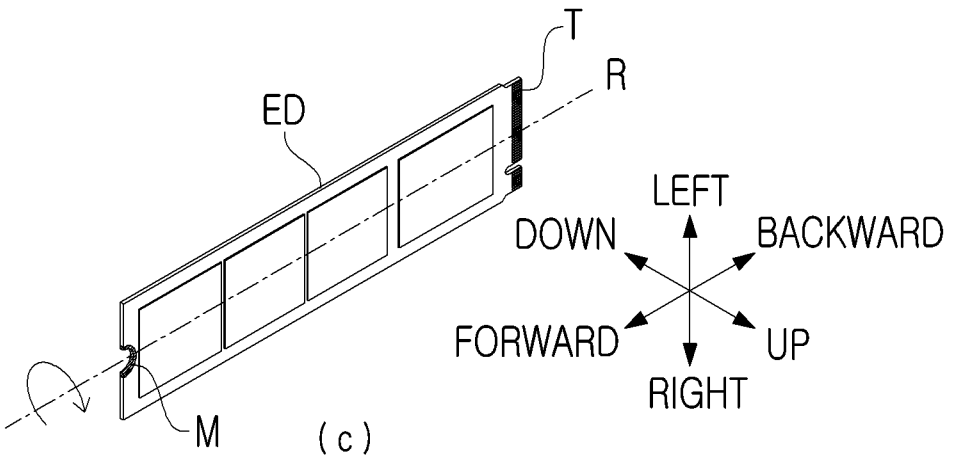
T
R
ED
LEFT
DOWN
BACKWARD
FORWARD
UP
RIGHT
M

(c)

FIG. 16

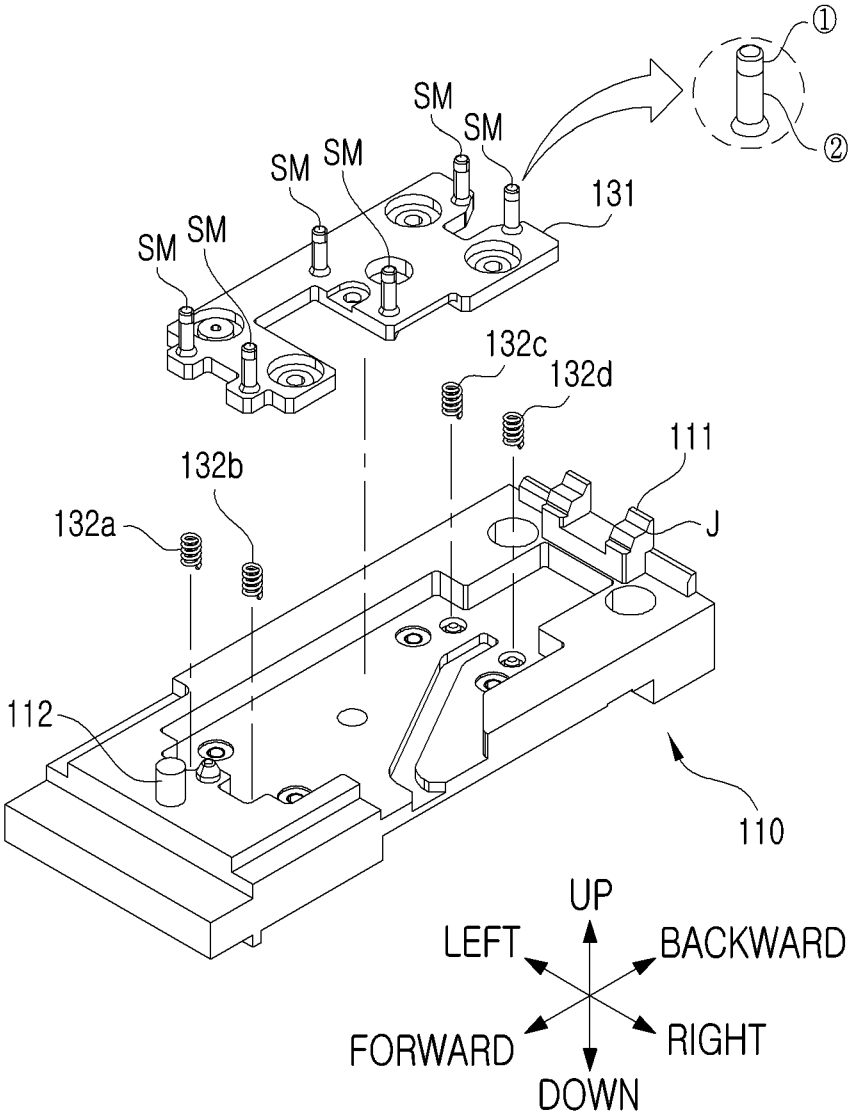
①
②
SM
SM
SM
SM
SM
SM
131
132c
132d
111
132b
132a
J
112
110
UP
LEFT
BACKWARD
FORWARD
RIGHT
DOWN

FIG. 17

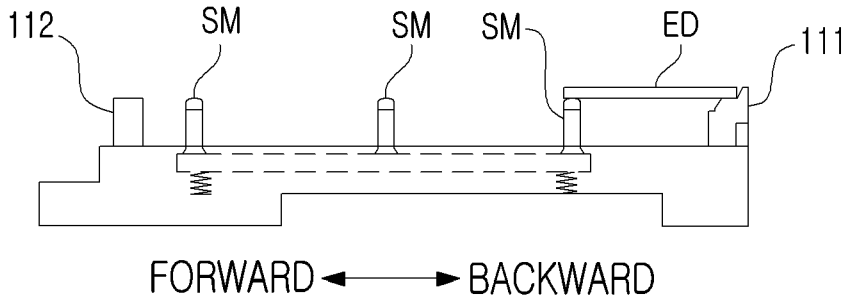
112
SM
SM
SM
ED
111
FORWARD
BACKWARD

(a)

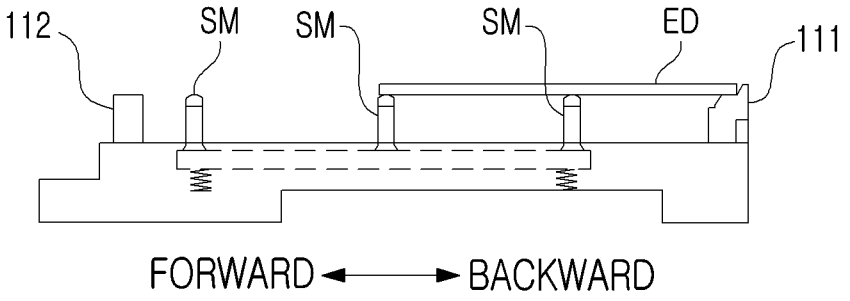
112
SM
SM
SM
ED
111
FORWARD
BACKWARD

(b)

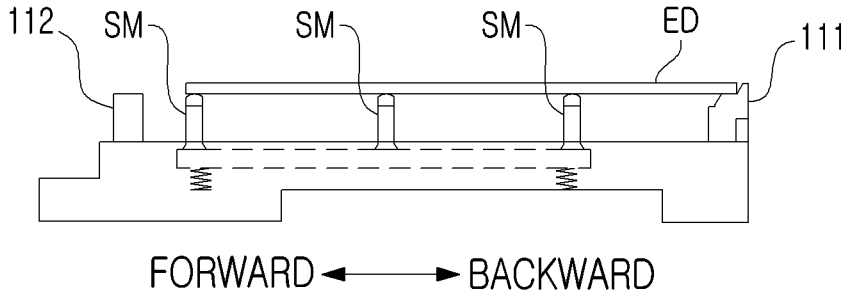
112
SM
SM
SM
ED
111
FORWARD
BACKWARD

(c)

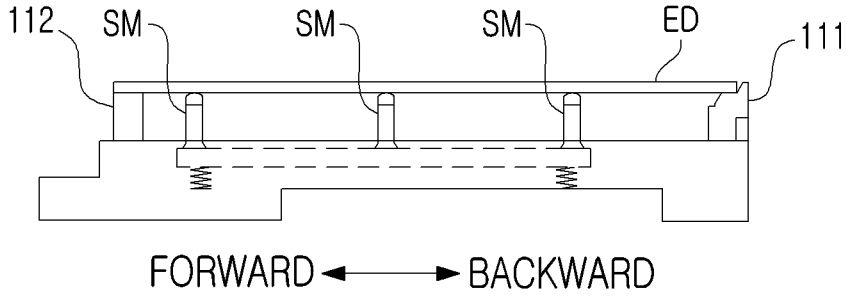
112
SM
SM
SM
ED
111
FORWARD
BACKWARD

(d)

FIG. 18

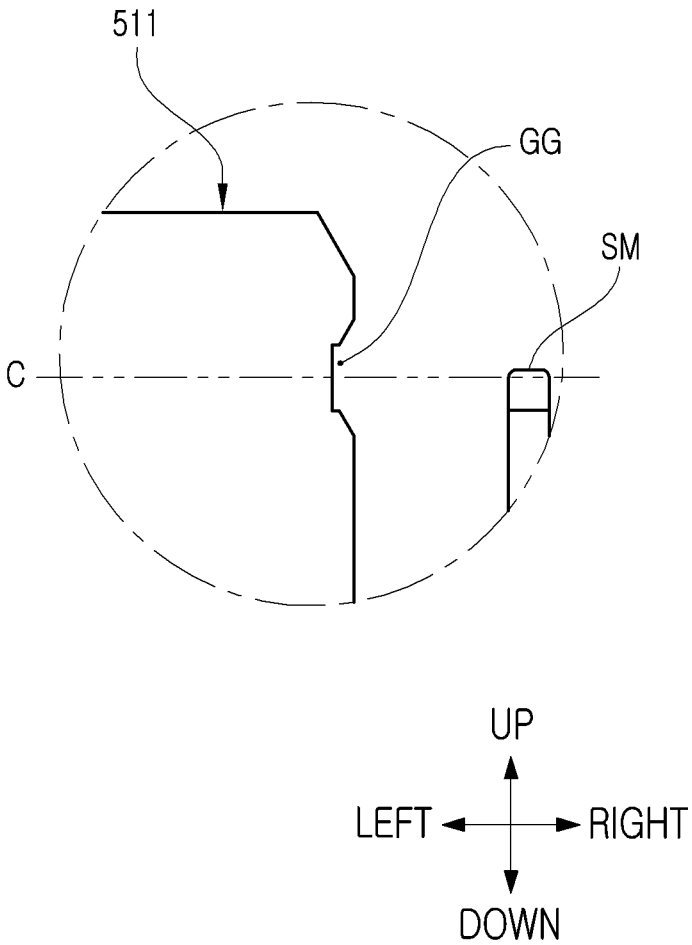

FIG. 19

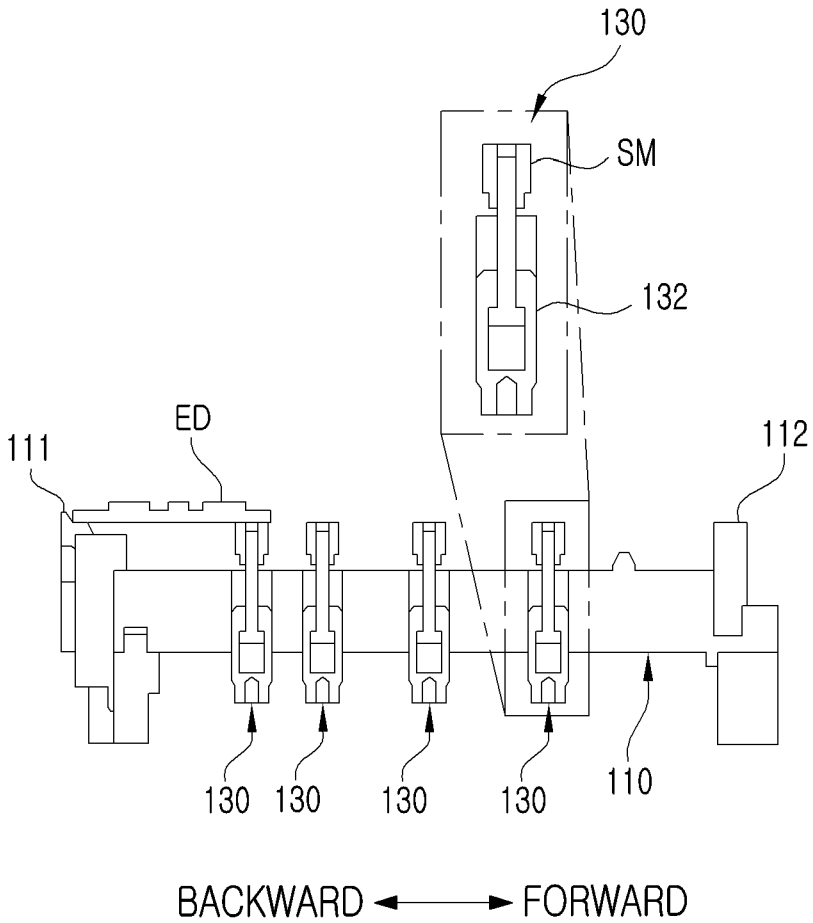

FIG. 20

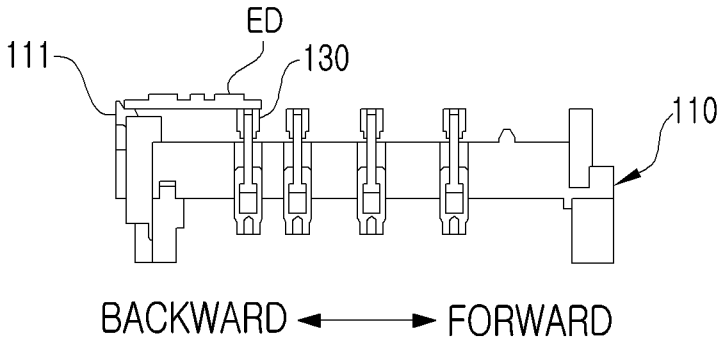
ED
111
130
110
BACKWARD
FORWARD

(a)

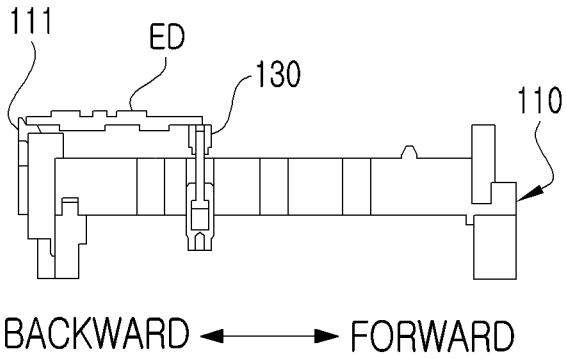
111
ED
130
110
BACKWARD
FORWARD

(b)

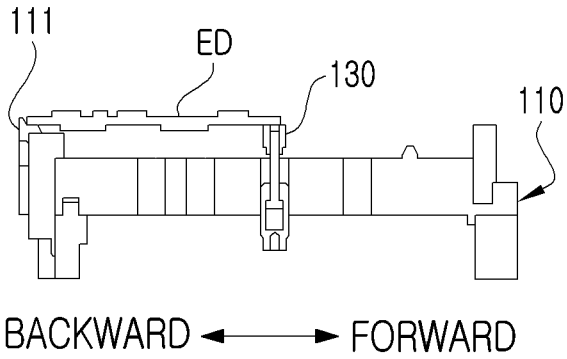
111
ED
130
110
BACKWARD
FORWARD

(c)

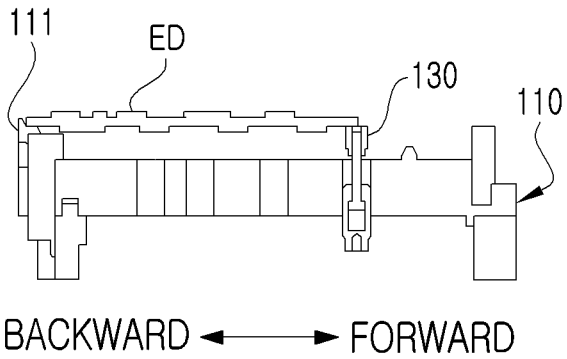
111
ED
130
110
BACKWARD
FORWARD

(d)

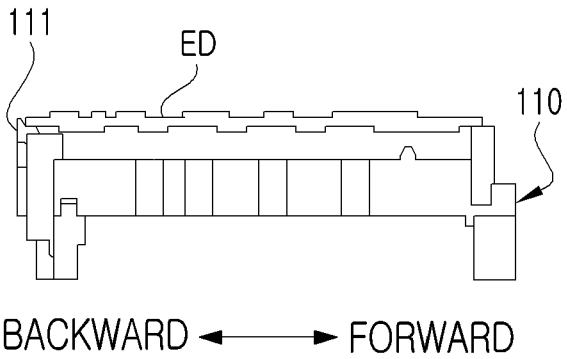
111
ED
110
BACKWARD
FORWARD

(e)

FIG. 21

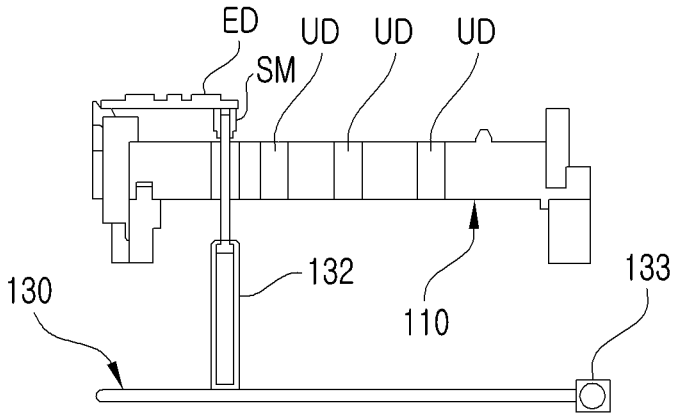

(a)

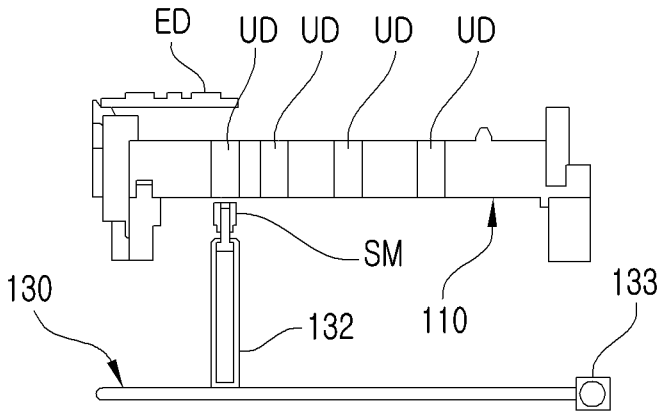

(b)

FIG. 22

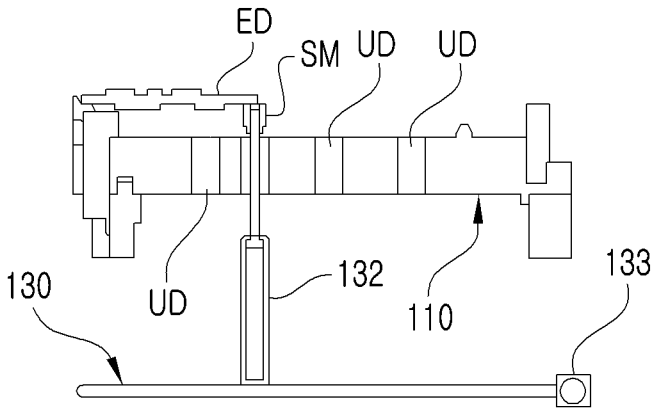

(a)

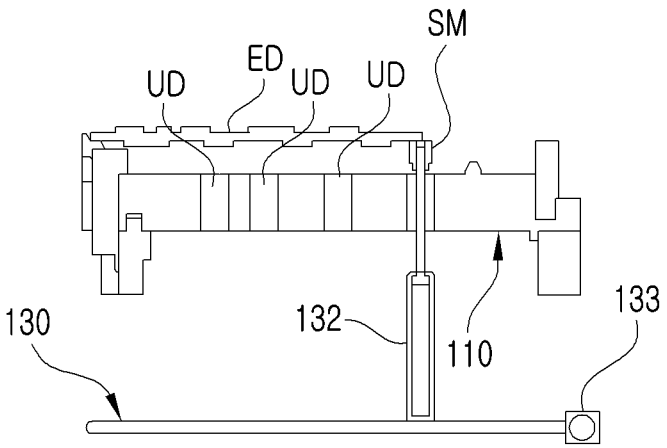

(b)