(12) INTERNATIONAL APPLICATION PUBLISHED UNDER THE PATENT COOPERATION TREATY (PCT)

(19) World Intellectual Property Organization
International Bureau

(43) International Publication Date
16 June 2011 (16.06.2011)

PCT

(10) International Publication Number
WO 2011/071610 A1

(51) International Patent Classification:
G10L 19/00 (2006.01) *G10L 19/02* (2006.01)

(21) International Application Number:
PCT/US2010/054480

(22) International Filing Date:
28 October 2010 (28.10.2010)

(25) Filing Language: English

(26) Publication Language: English

(30) Priority Data:
61/267,422 7 December 2009 (07.12.2009) US

(71) Applicant *(for all designated States except US)*: **DOLBY LABORATORIES LICENSING CORPORATION** [US/US]; 100 Potrero Avenue, San Francisco, CA 94103-4813 (US).

(72) Inventor; and

(75) Inventor/Applicant *(for US only)*: **RAMAMOORTHY, Kamalanathan** [IN/US]; 100 Potrero Avenue, San Francisco, CA 94103-4813 (US).

(74) Agents: **DOLBY LABORATORIES, INC.** et al.; Intellectual Property Group, 999 Brannan Street, San Francisco, CA 94103-4938 (US).

(81) Designated States *(unless otherwise indicated, for every kind of national protection available)*: AE, AG, AL, AM, AO, AT, AU, AZ, BA, BB, BG, BH, BR, BW, BY, BZ, CA, CH, CL, CN, CO, CR, CU, CZ, DE, DK, DM, DO, DZ, EC, EE, EG, ES, FI, GB, GD, GE, GH, GM, GT, HN, HR, HU, ID, IL, IN, IS, JP, KE, KG, KM, KN, KP, KR, KZ, LA, LC, LK, LR, LS, LT, LU, LY, MA, MD, ME, MG, MK, MN, MW, MX, MY, MZ, NA, NG, NI, NO, NZ, OM, PE, PG, PH, PL, PT, RO, RS, RU, SC, SD, SE, SG, SK, SL, SM, ST, SV, SY, TH, TJ, TM, TN, TR, TT, TZ, UA, UG, US, UZ, VC, VN, ZA, ZM, ZW.

(84) Designated States *(unless otherwise indicated, for every kind of regional protection available)*: ARIPO (BW, GH, GM, KE, LR, LS, MW, MZ, NA, SD, SL, SZ, TZ, UG, ZM, ZW), Eurasian (AM, AZ, BY, KG, KZ, MD, RU, TJ, TM), European (AL, AT, BE, BG, CH, CY, CZ, DE, DK, EE, ES, FI, FR, GB, GR, HR, HU, IE, IS, IT, LT, LU, LV, MC, MK, MT, NL, NO, PL, PT, RO, RS, SE, SI, SK, SM, TR), OAPI (BF, BJ, CF, CG, CI, CM, GA, GN, GQ, GW, ML, MR, NE, SN, TD, TG).

Declarations under Rule 4.17:

— *as to the identity of the inventor (Rule 4.17(i))*

— *as to applicant's entitlement to apply for and be granted a patent (Rule 4.17(ii))*

[Continued on next page]

(54) Title: DECODING OF MULTICHANNEL AUFIO ENCODED BIT STREAMS USING ADAPTIVE HYBRID TRANSFORMATION

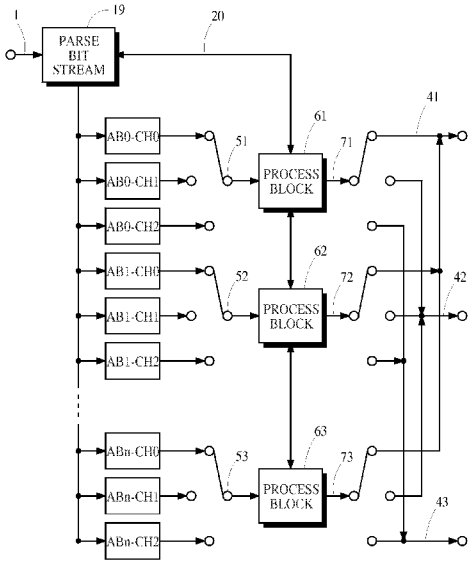

Fig. 7

(57) Abstract: The processing efficiency of a process used to decode frames of an enhanced AC-3 bit stream is improved by processing each audio block in a frame only once. Audio blocks of encoded data are decoded in block order rather than in channel order. Exemplary decoding processes for enhanced bit stream coding features such as adaptive hybrid transform processing and spectral extension are disclosed.

WO 2011/071610 A1

— *as to the applicant's entitlement to claim the priority of the earlier application (Rule 4.17(iii))*

— *of inventorship (Rule 4.17(iv))*

Published:

— *with international search report (Art. 21(3))*