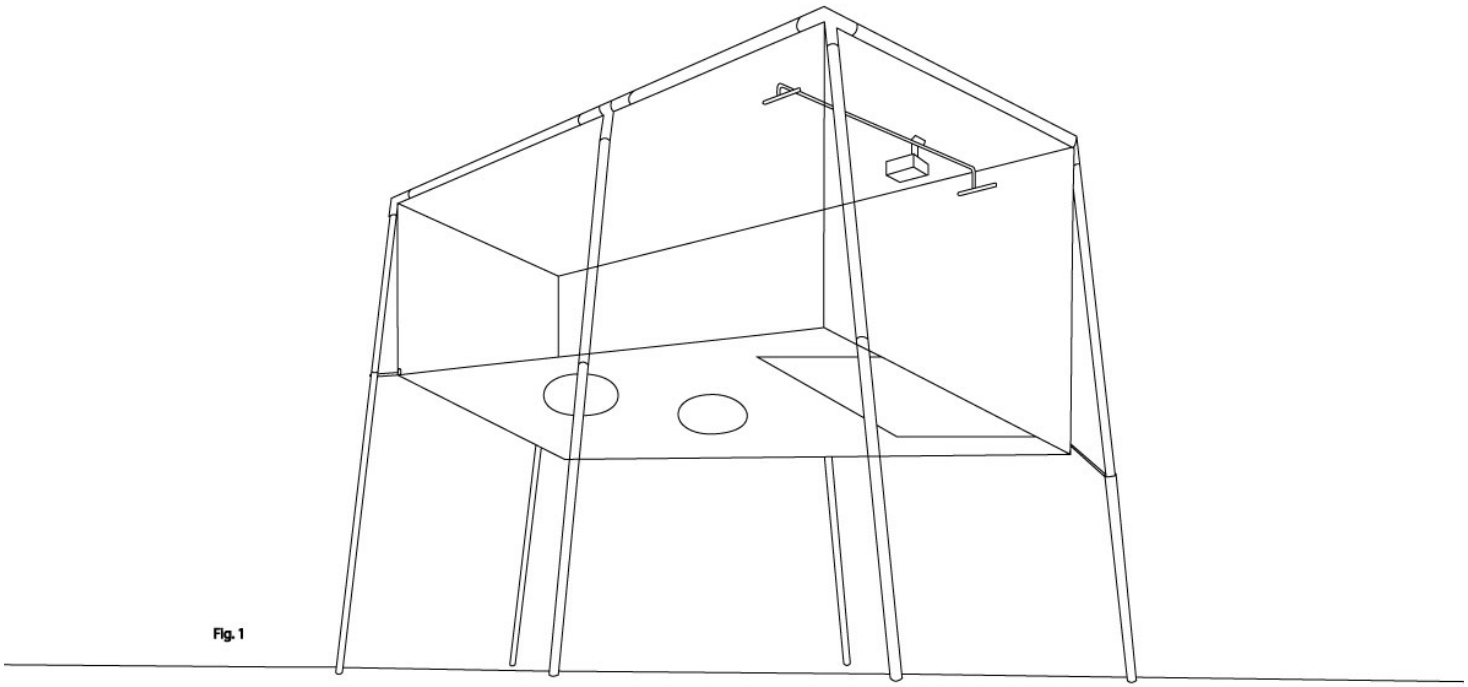

Fig. 1

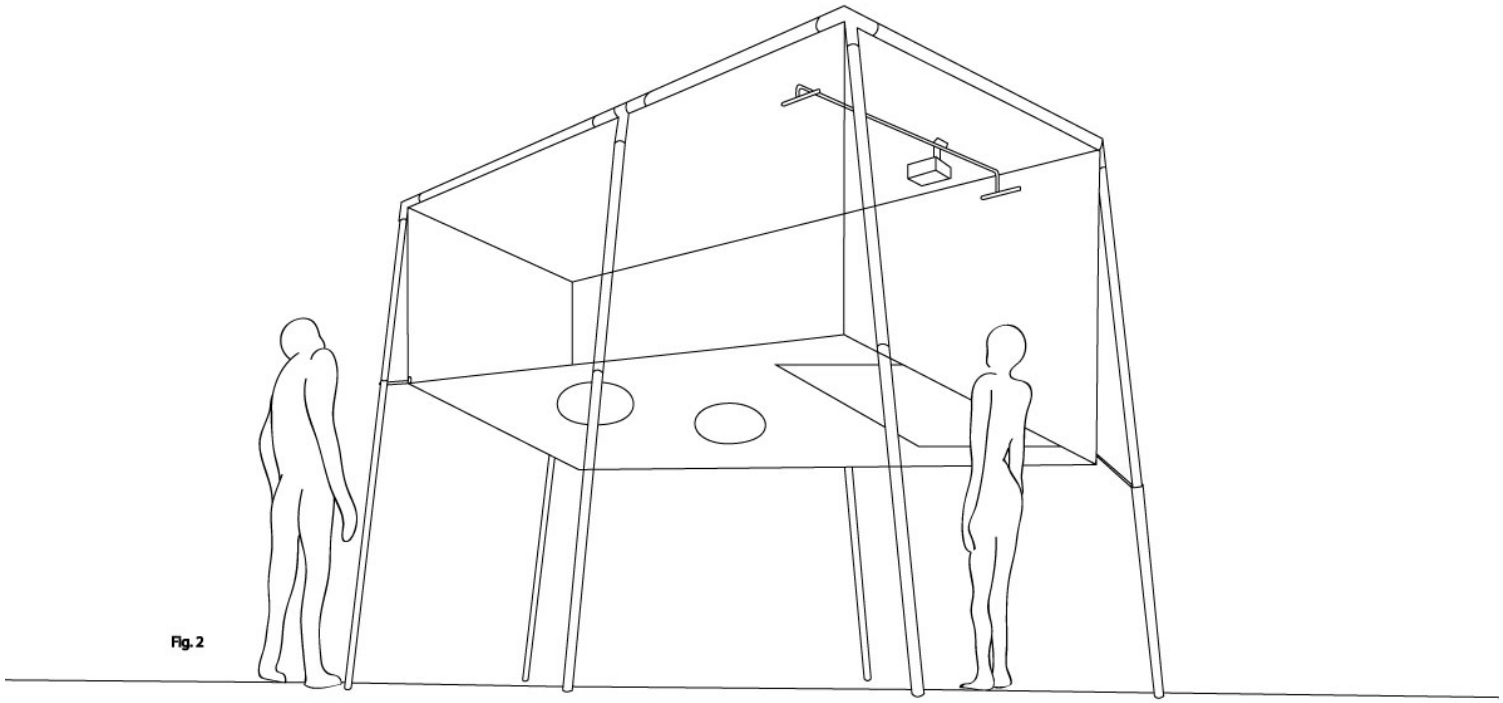

Fig. 2

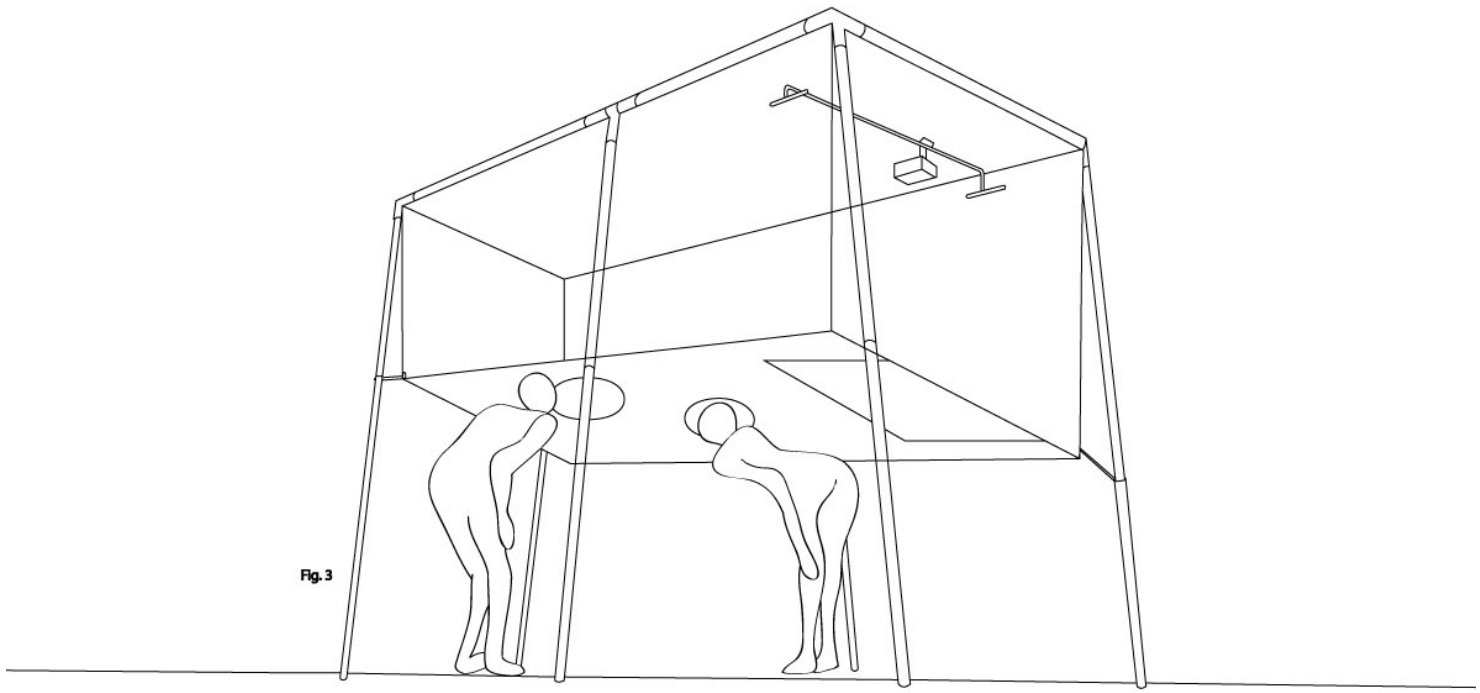

Fig. 3

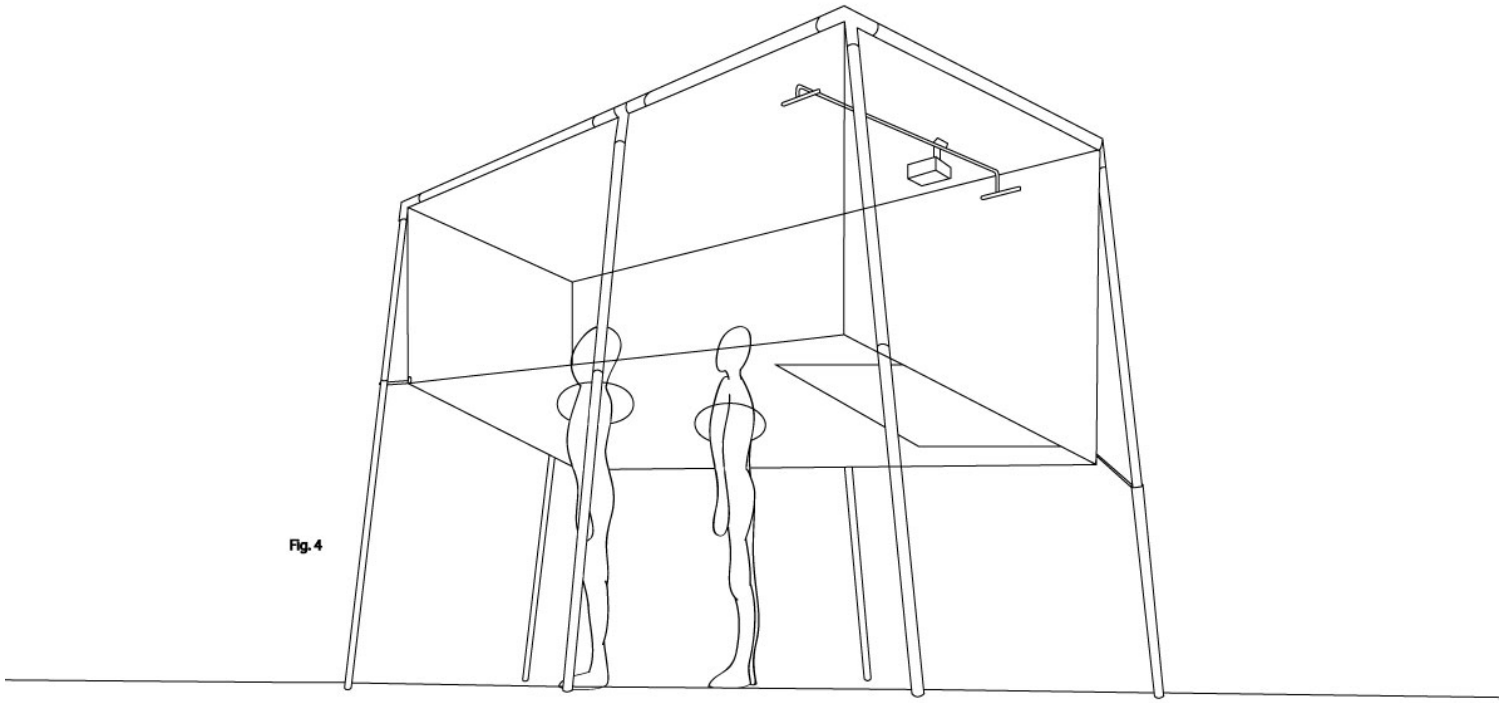

Fig. 4

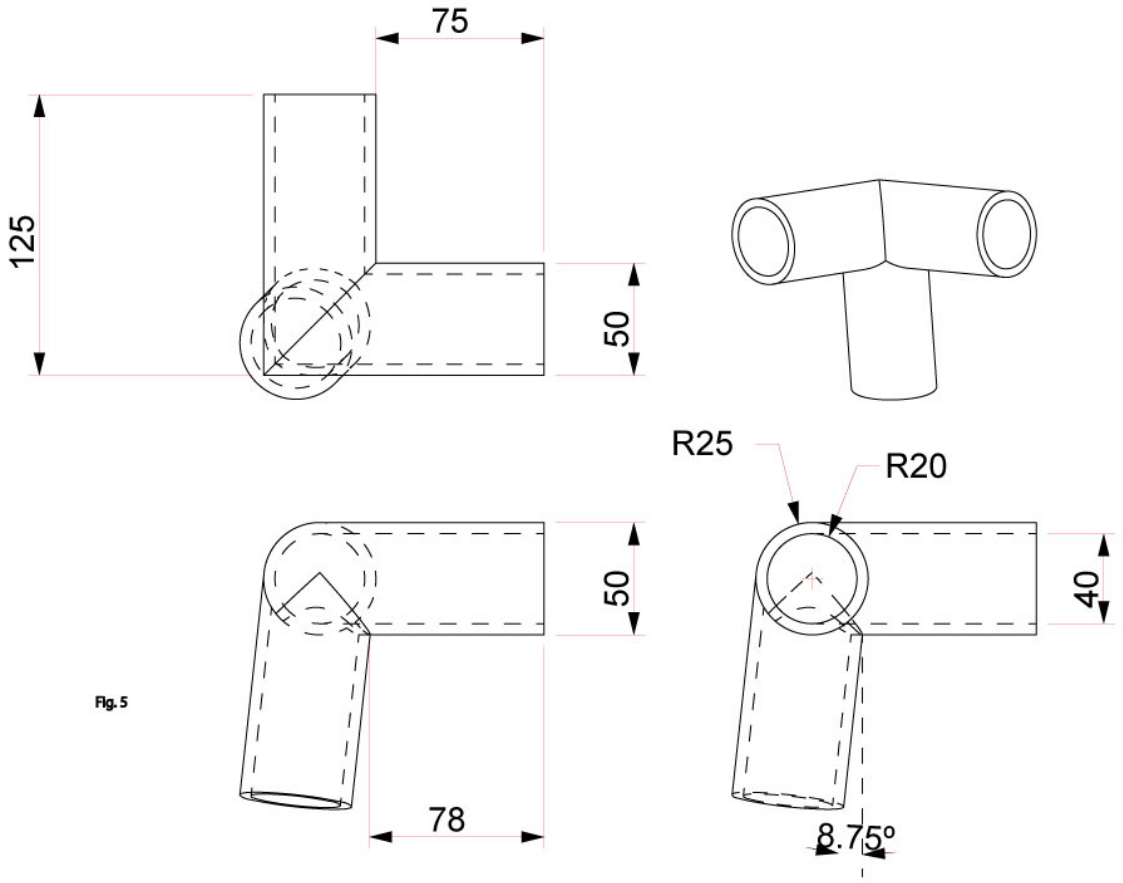

Fig. 5

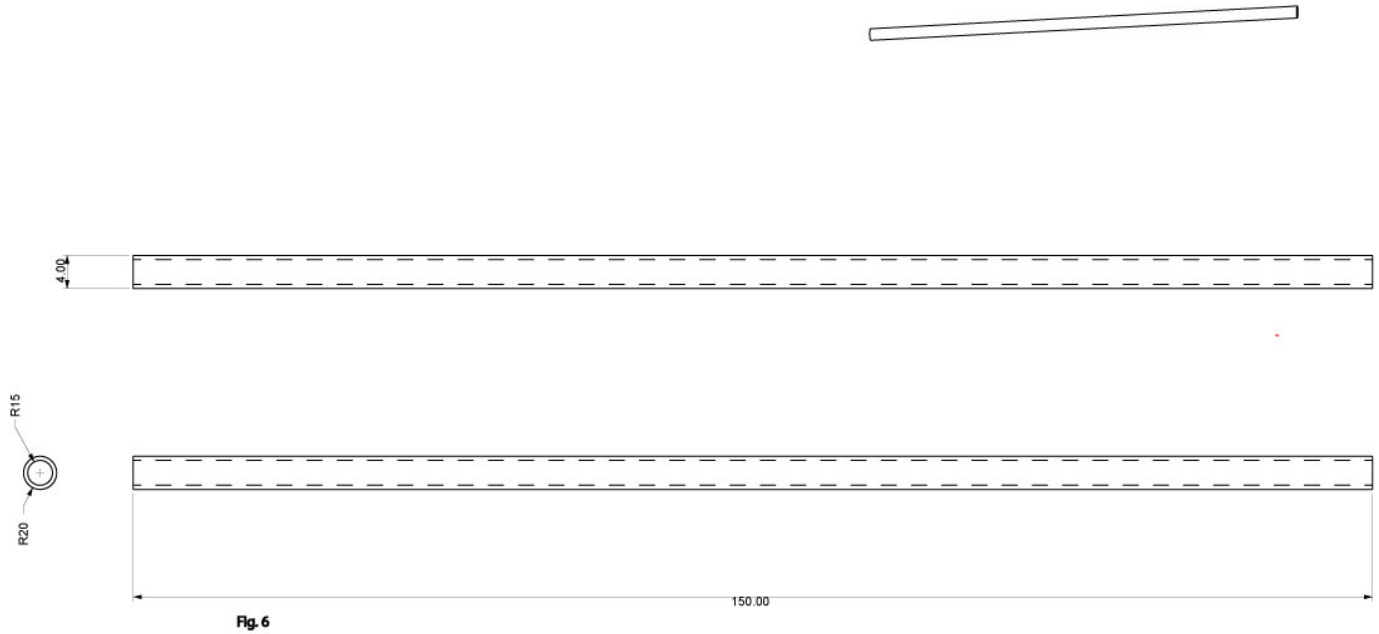

Fig. 6

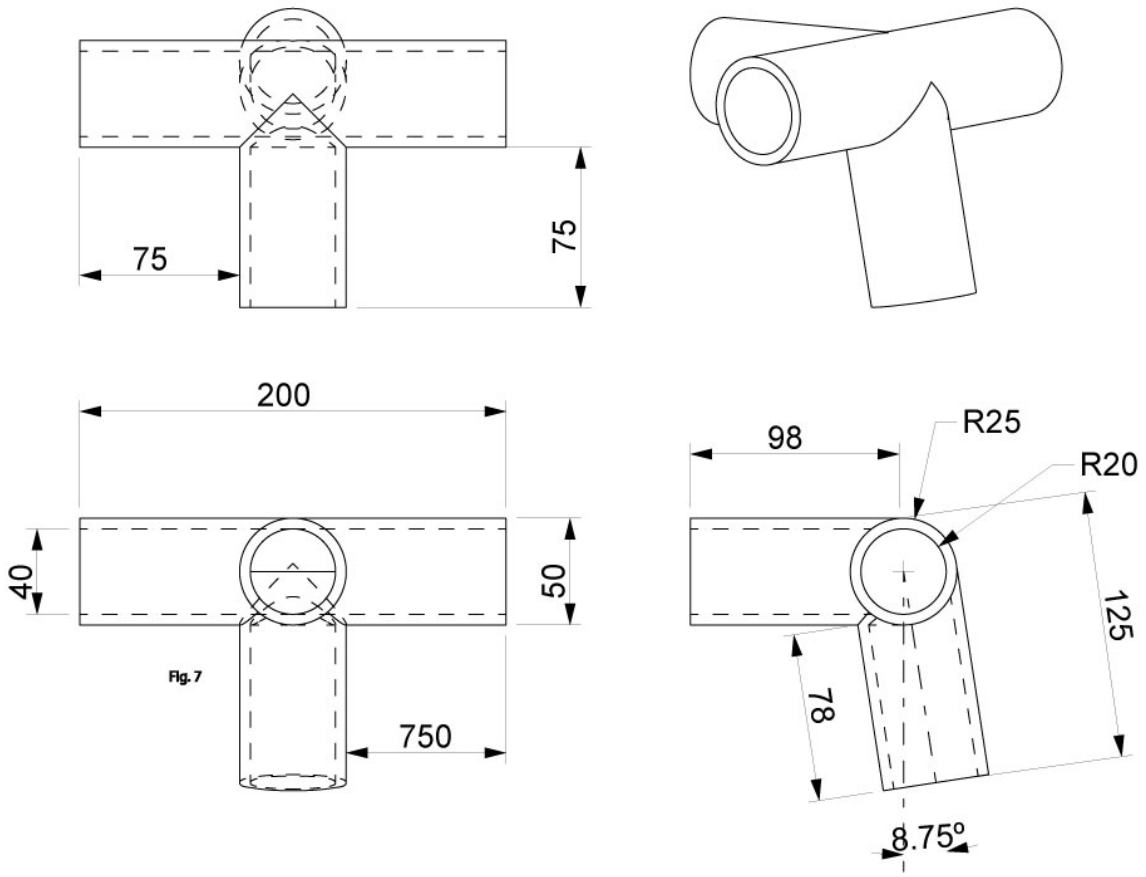

Fig. 7

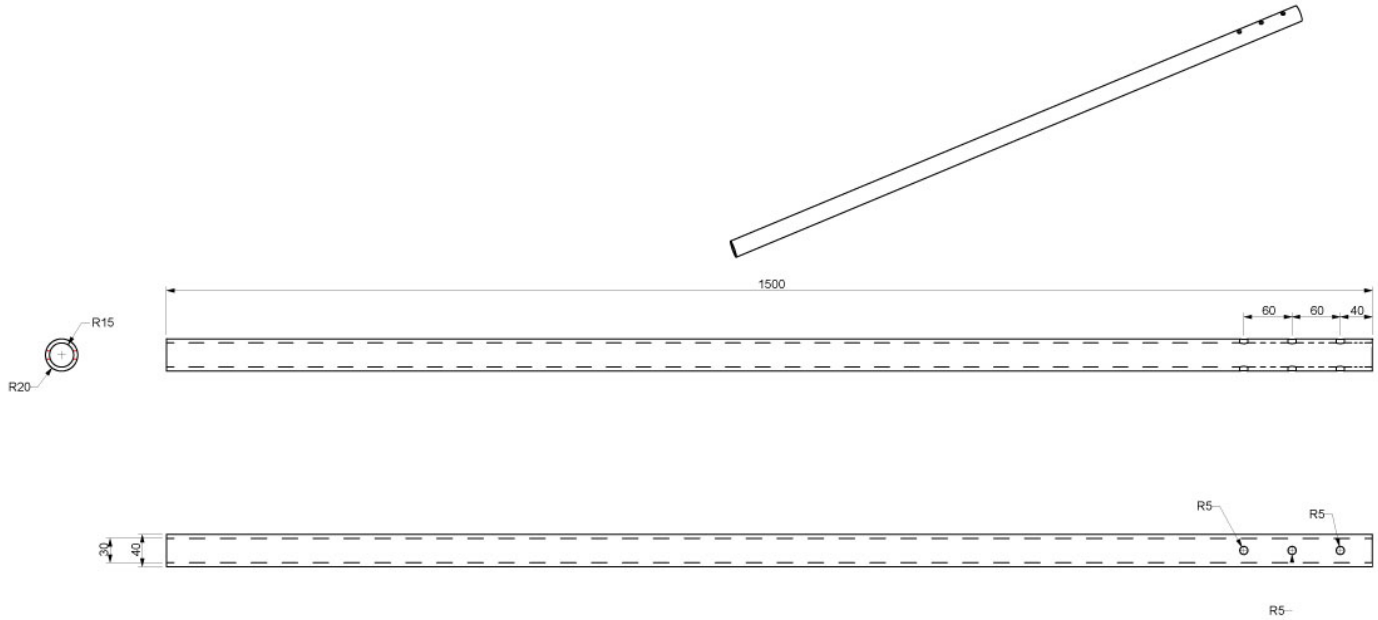

Fig. 8

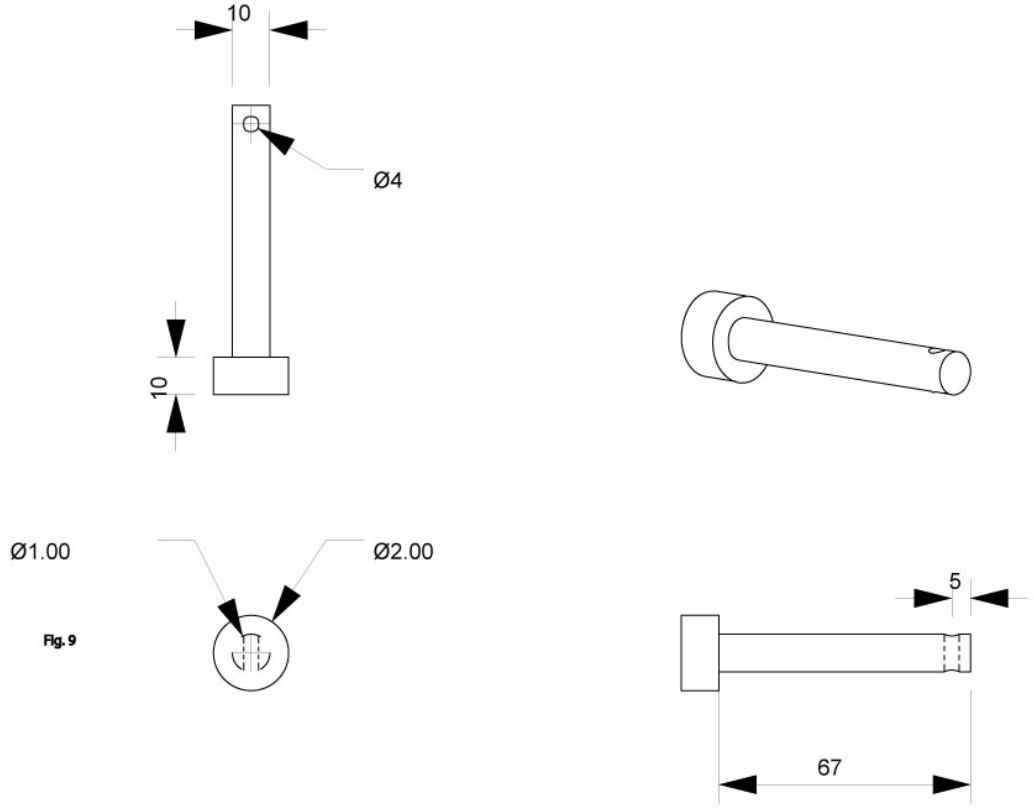

Fig. 9

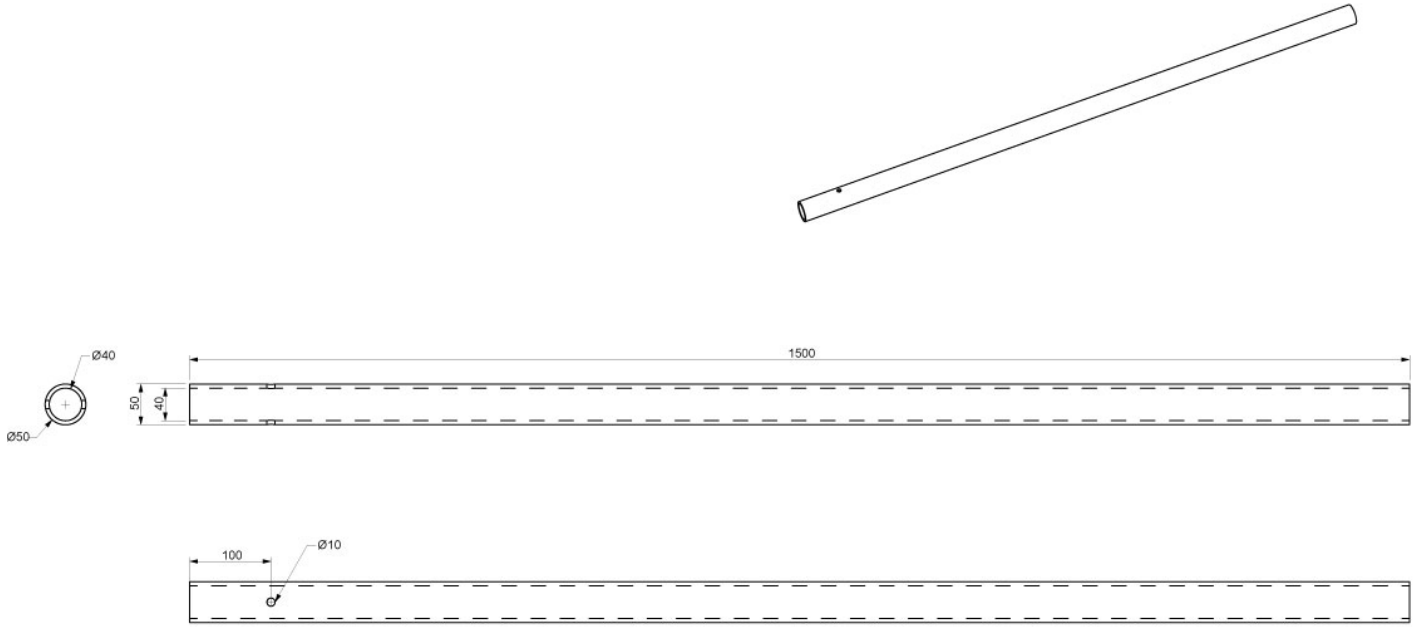

Fig. 10

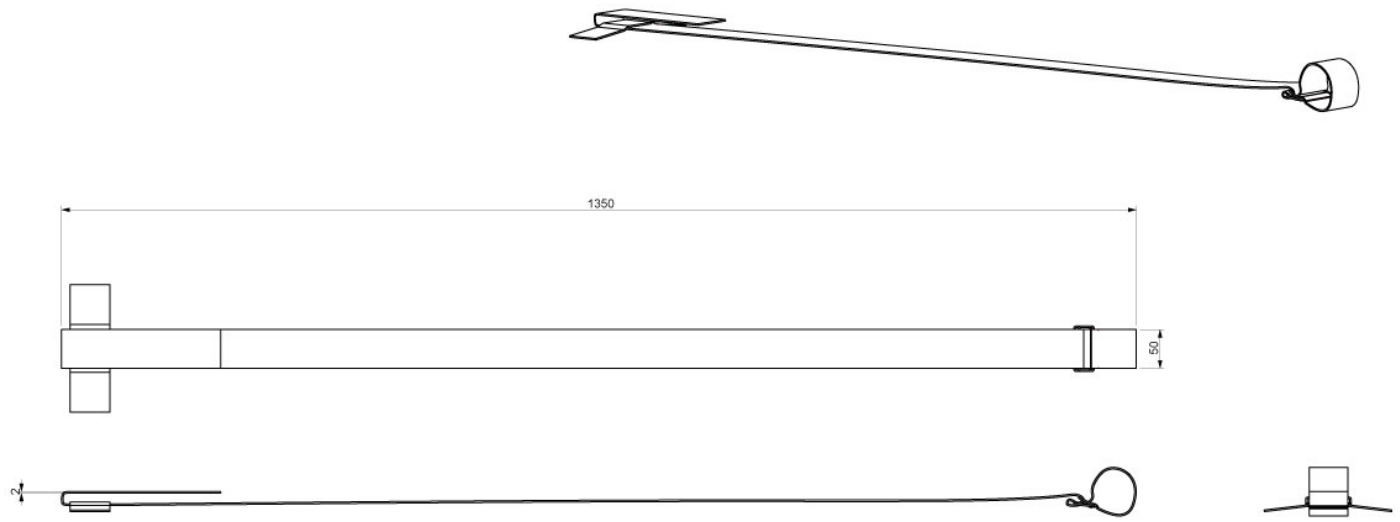

Fig. 11

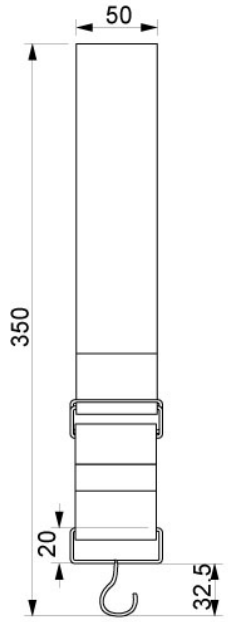

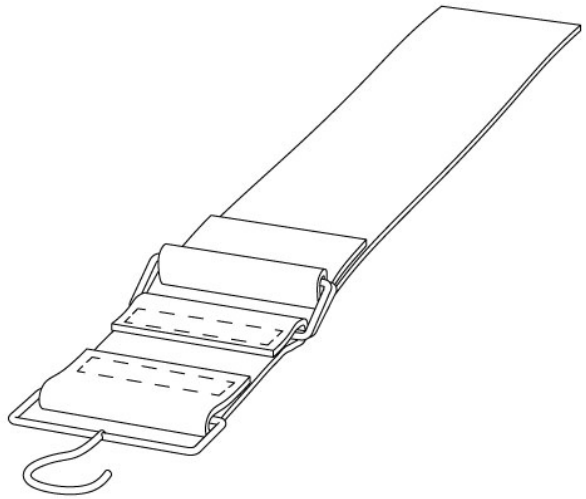

Fig. 12



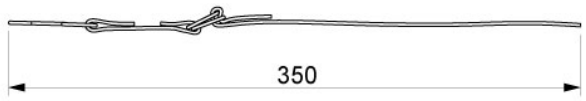



Fig. 13

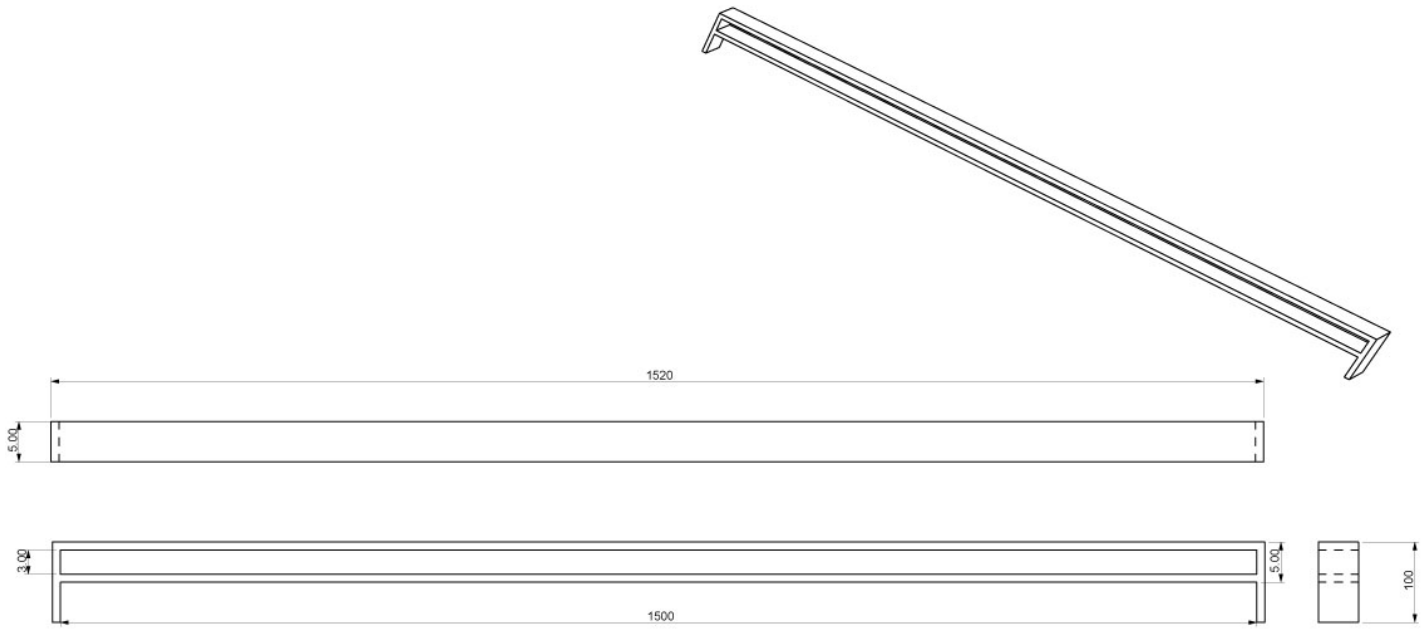

Fig. 14

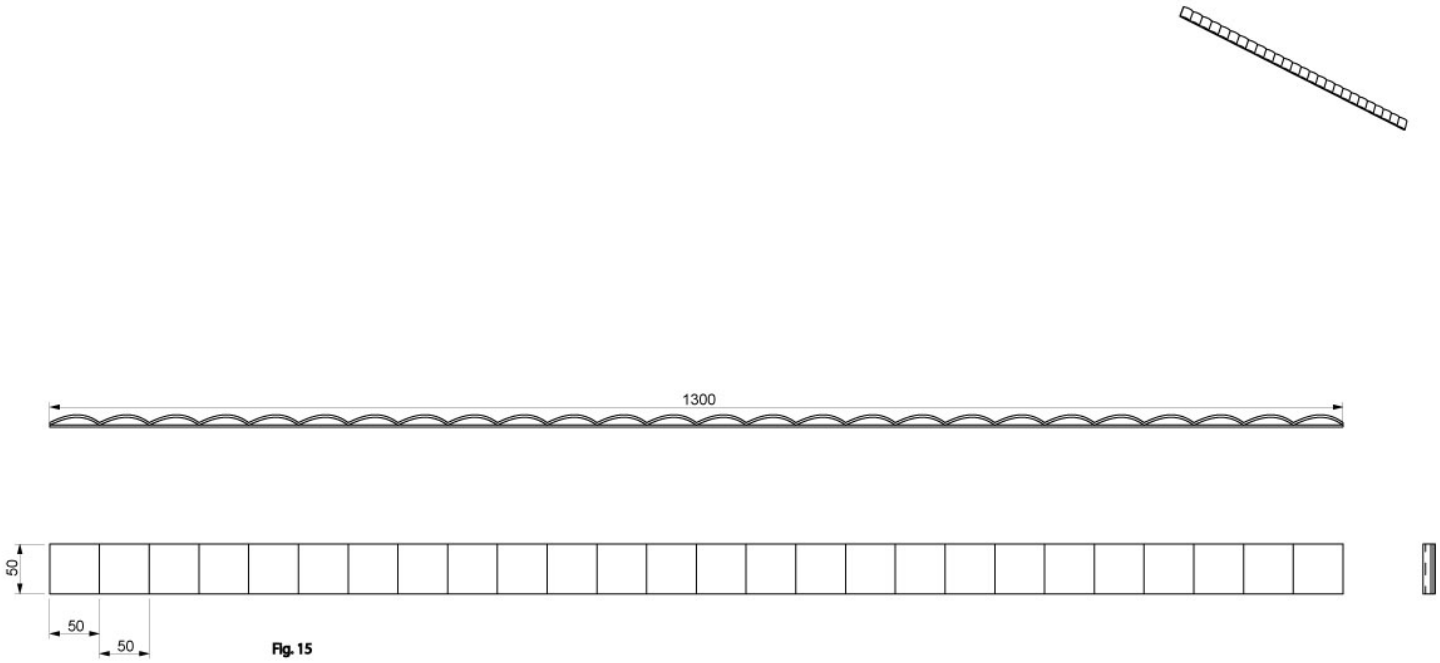

Fig. 15

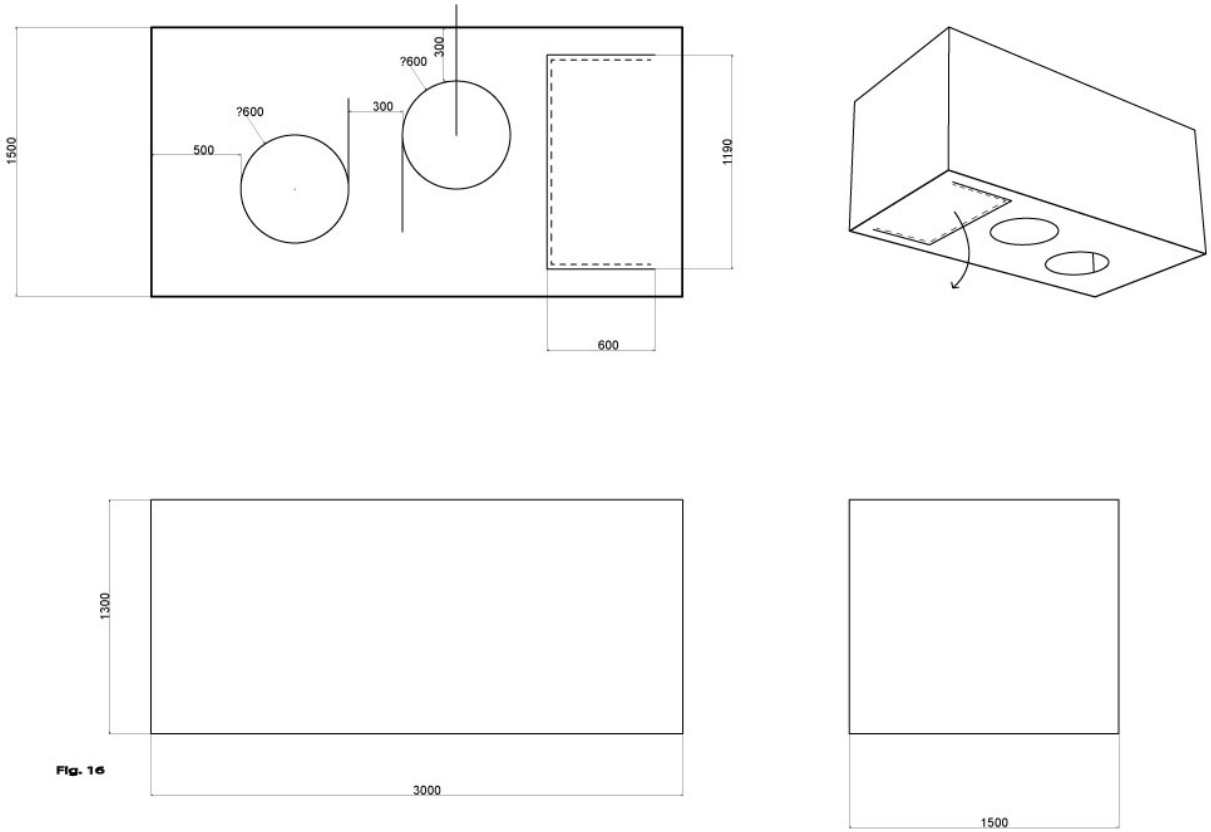

Fig. 16

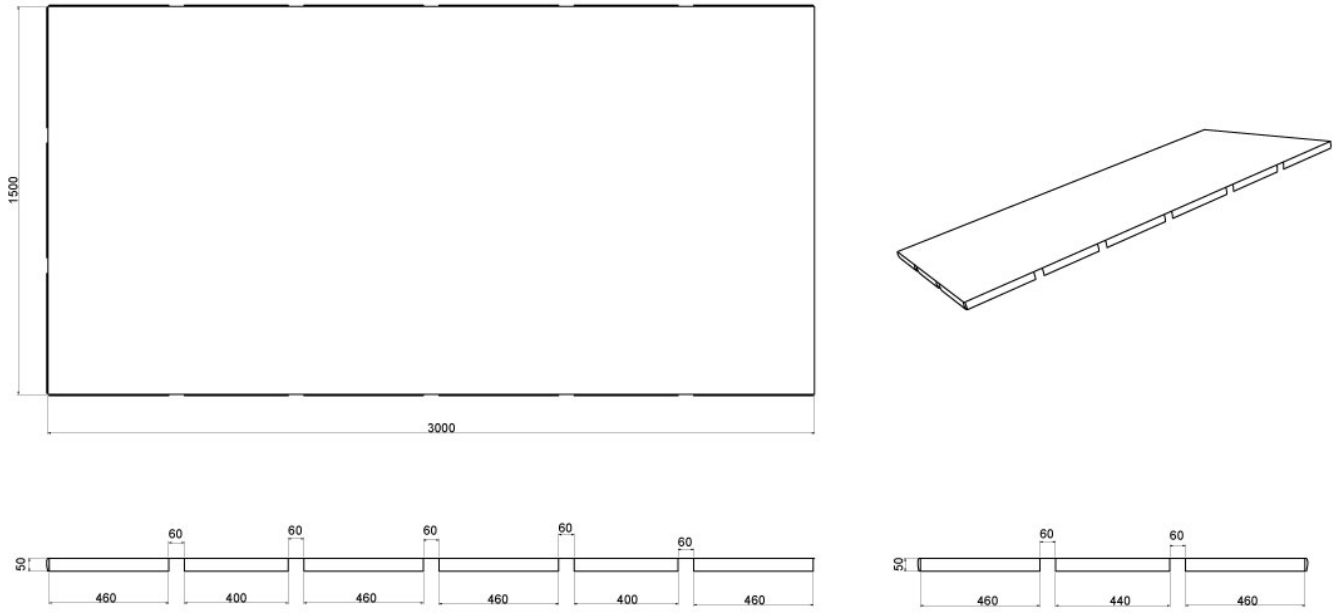
1500
3000
60
60
60
60
60
50
460
400
460
460
400
460
60
60
50
460
440
460

Fig. 17

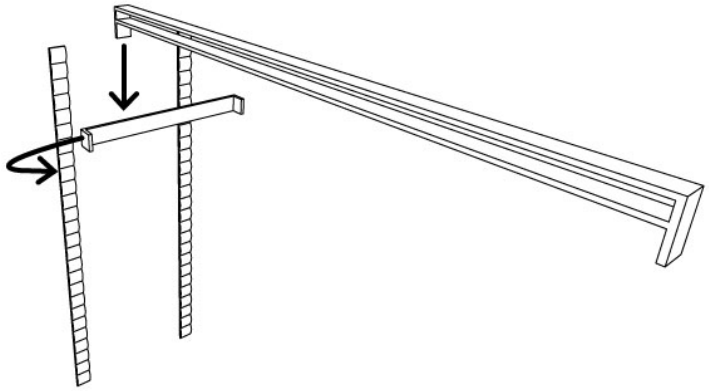

Fig. 18

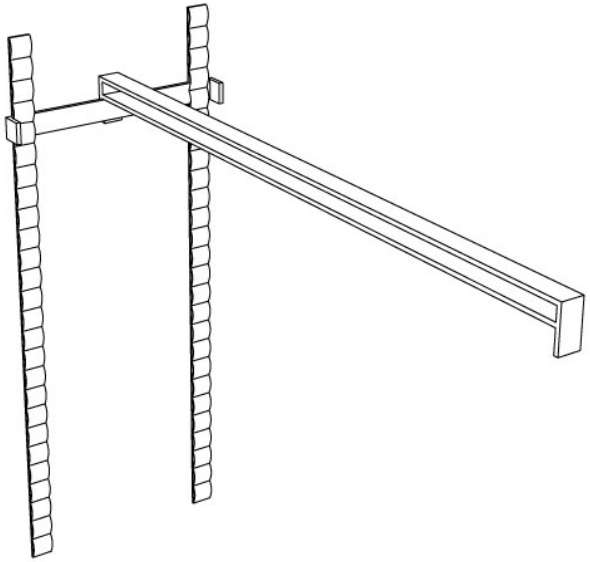

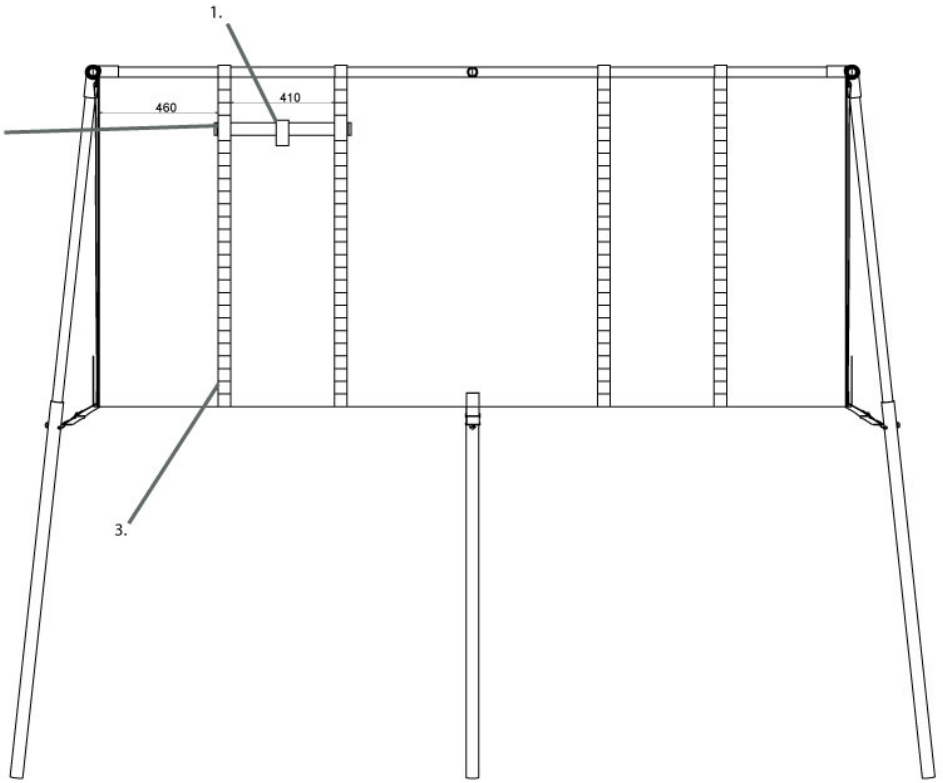

Fig. 19

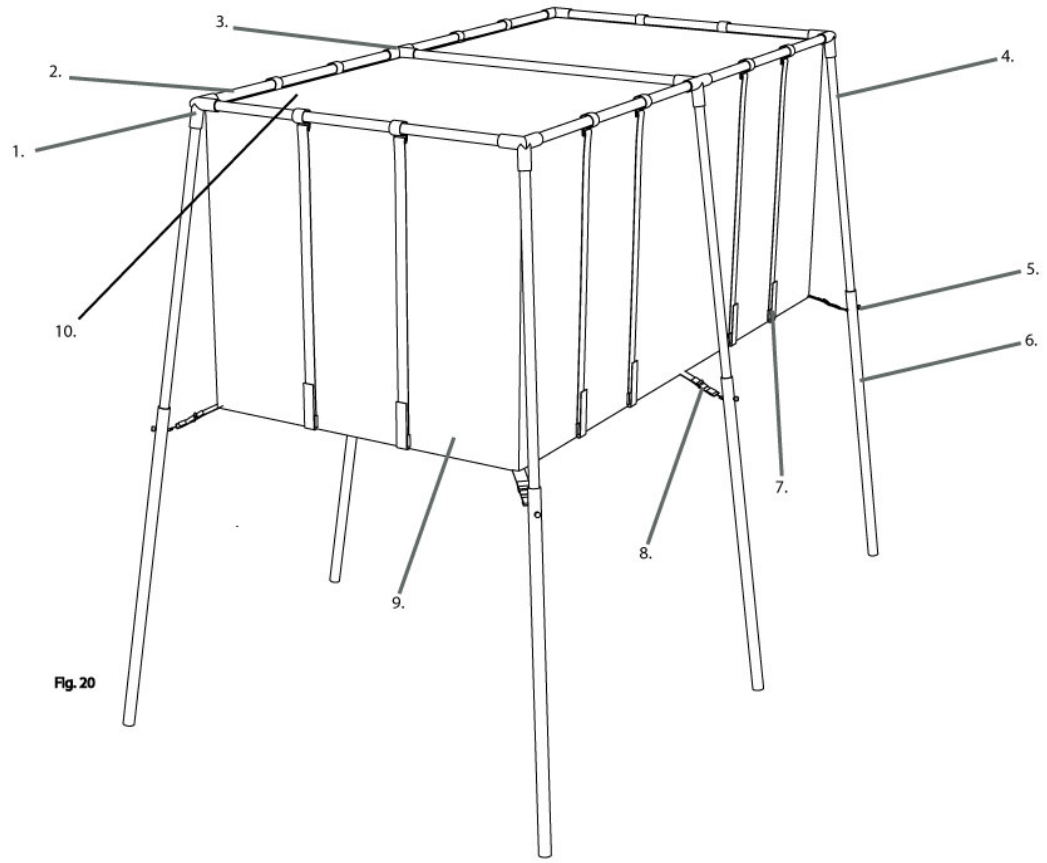

Fig. 20

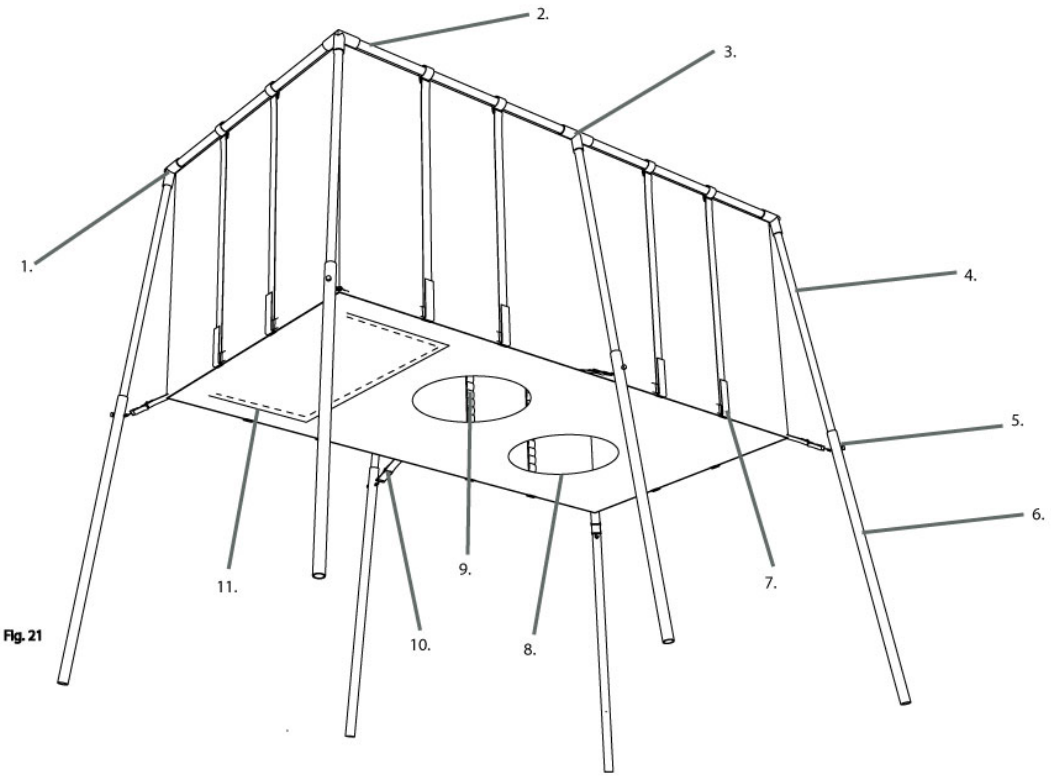

Fig. 21

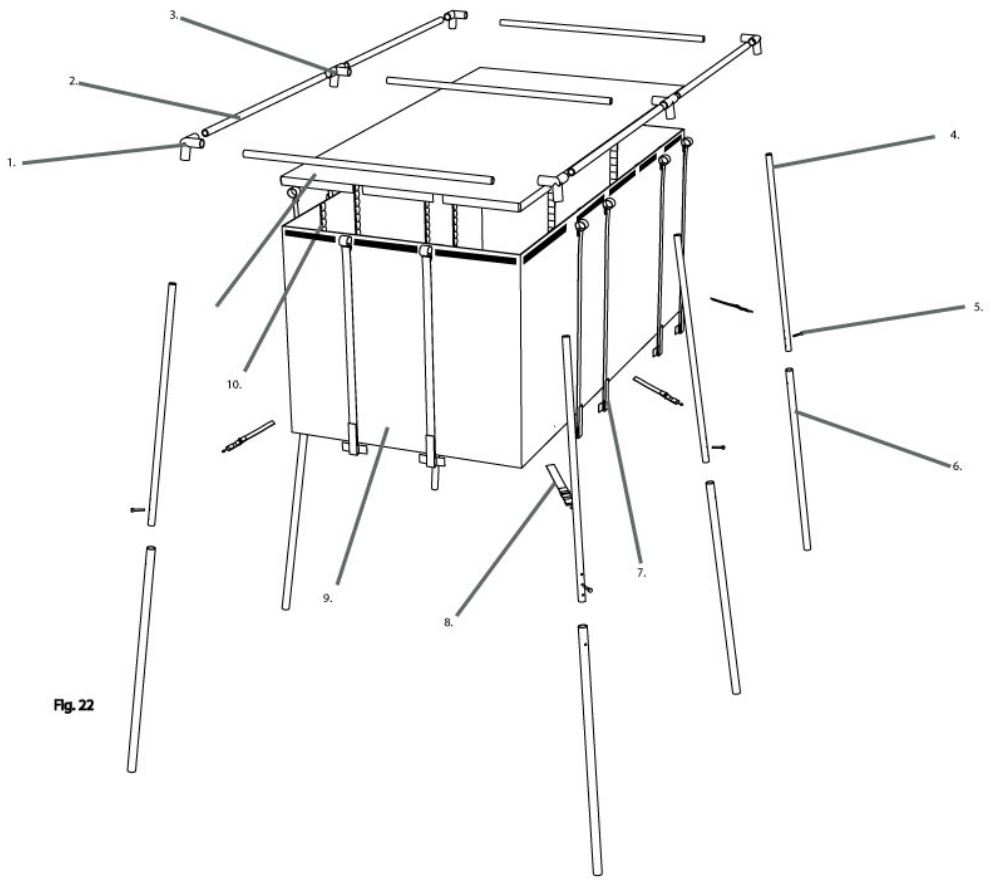

Fig. 22

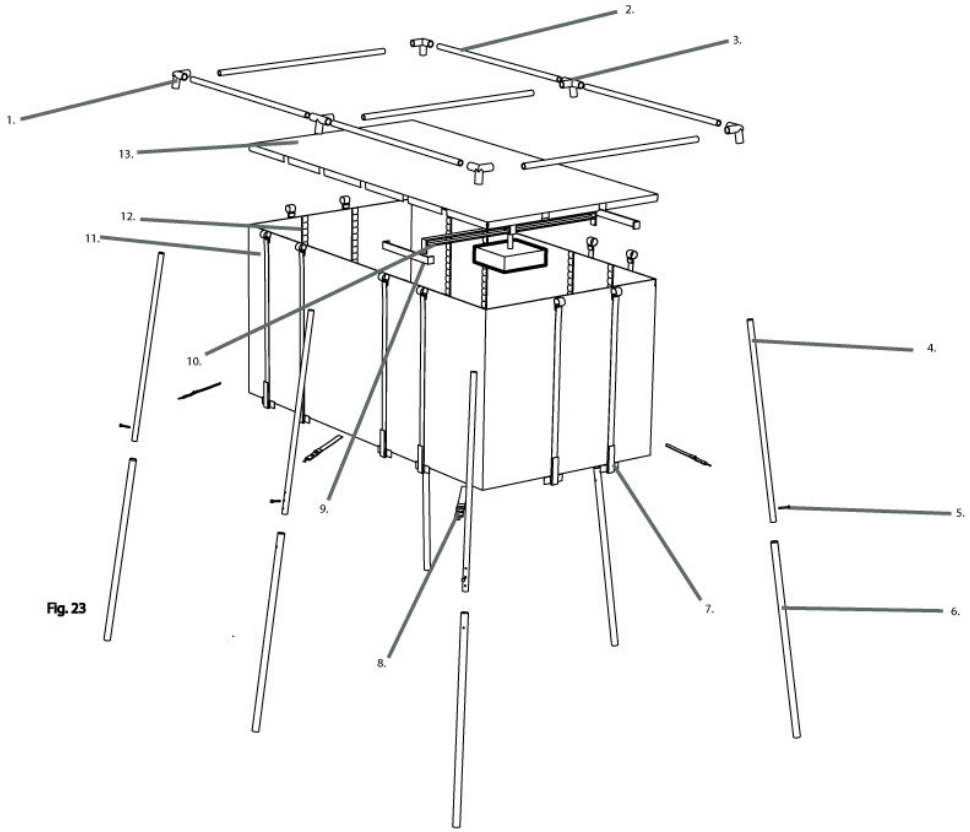

Fig. 23

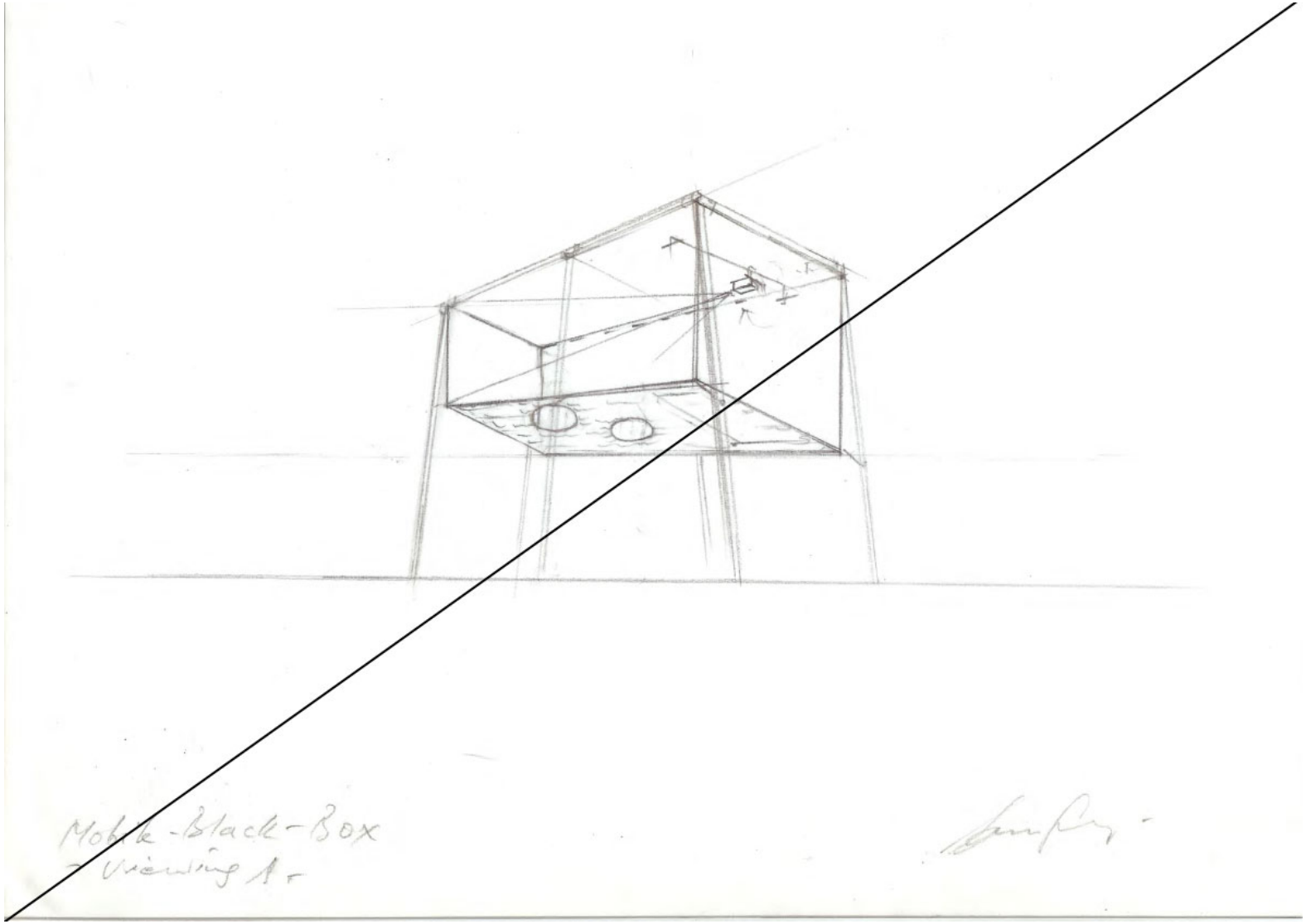
Mobile-Black-Box
- Viewing 1 -

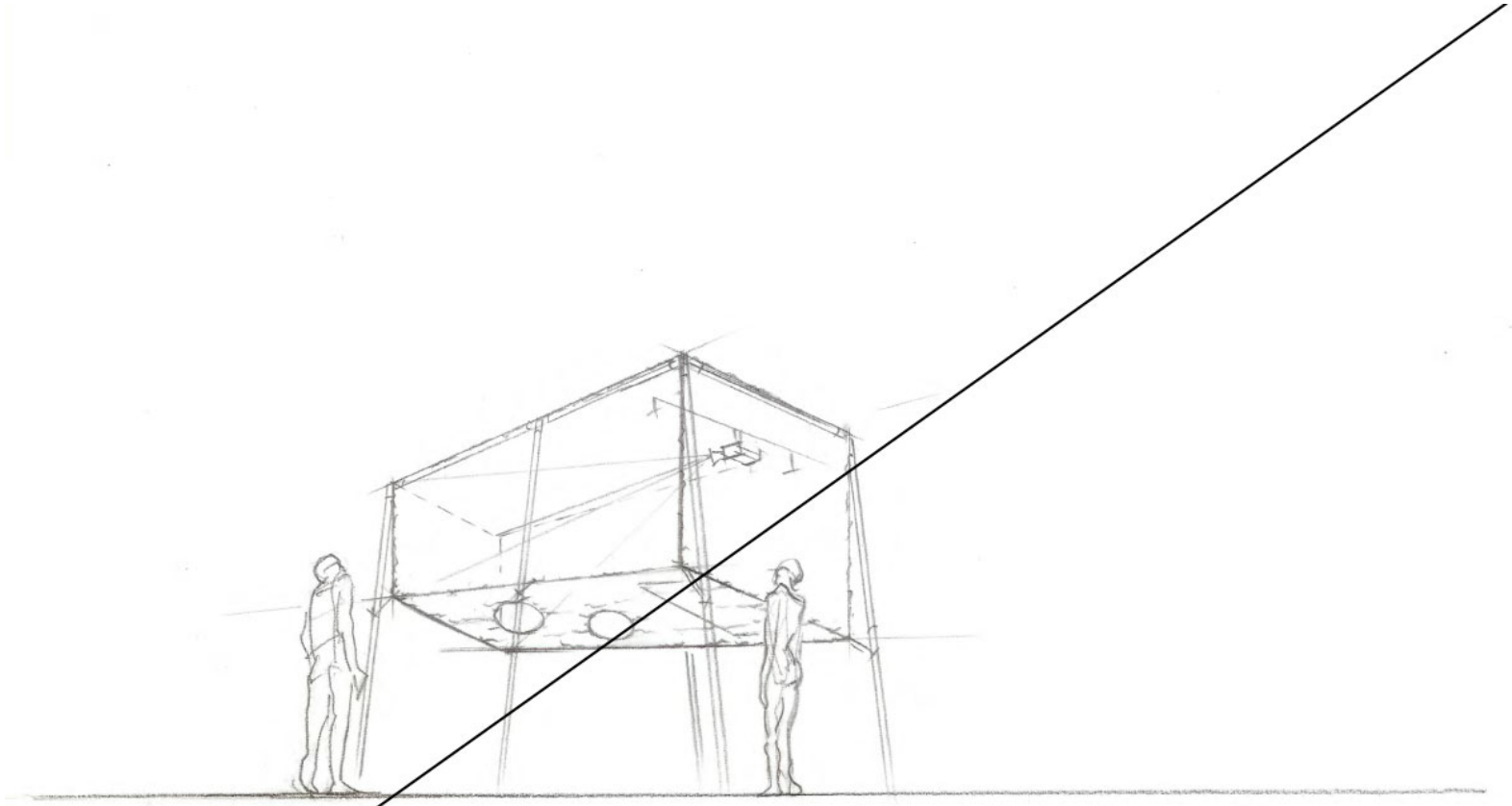

Mobile - Black - Box

- Variante 2 -

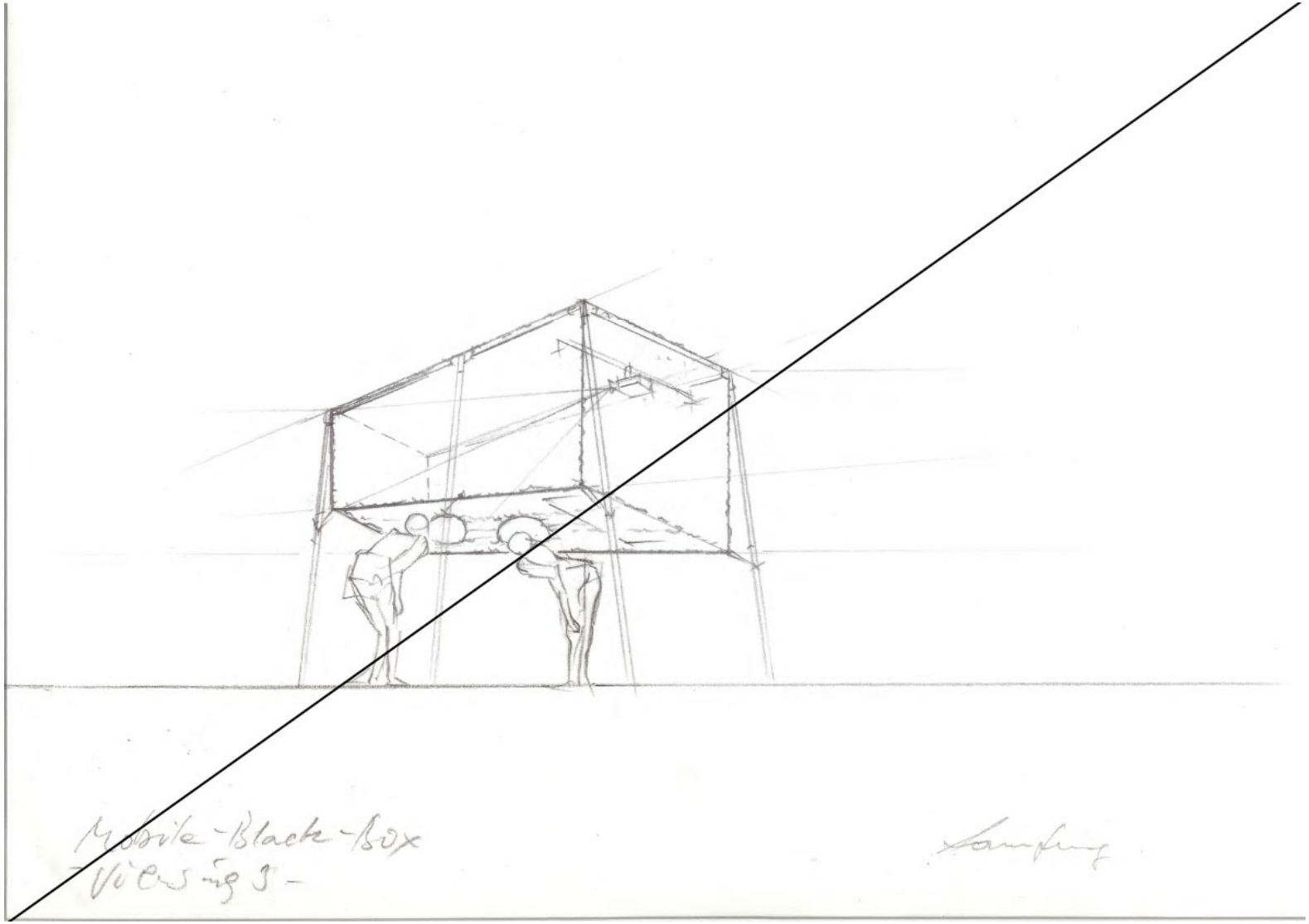
Mobile-Black-Box
-Views 3-

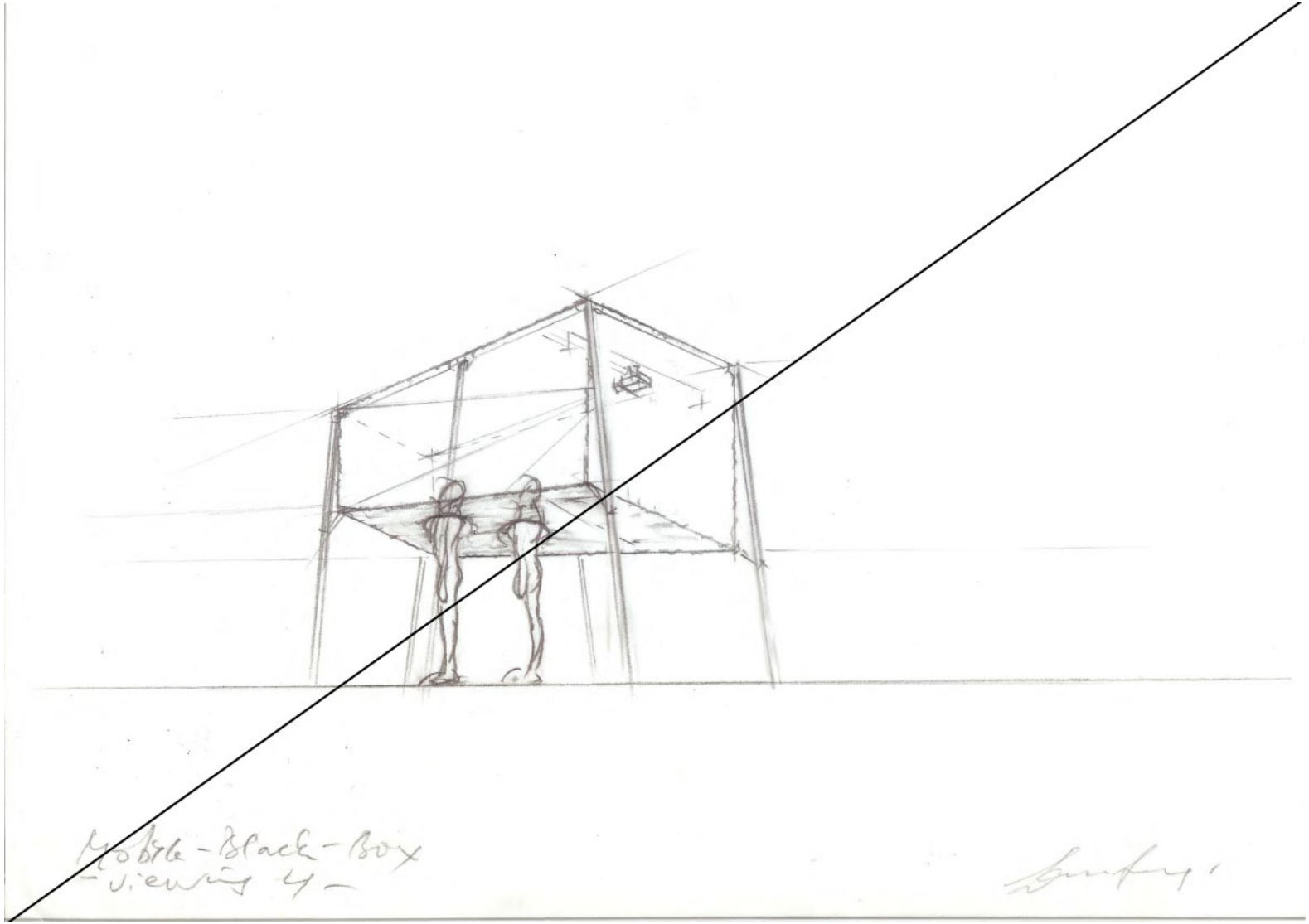
Mobile-Black-Box
-viewing 4-

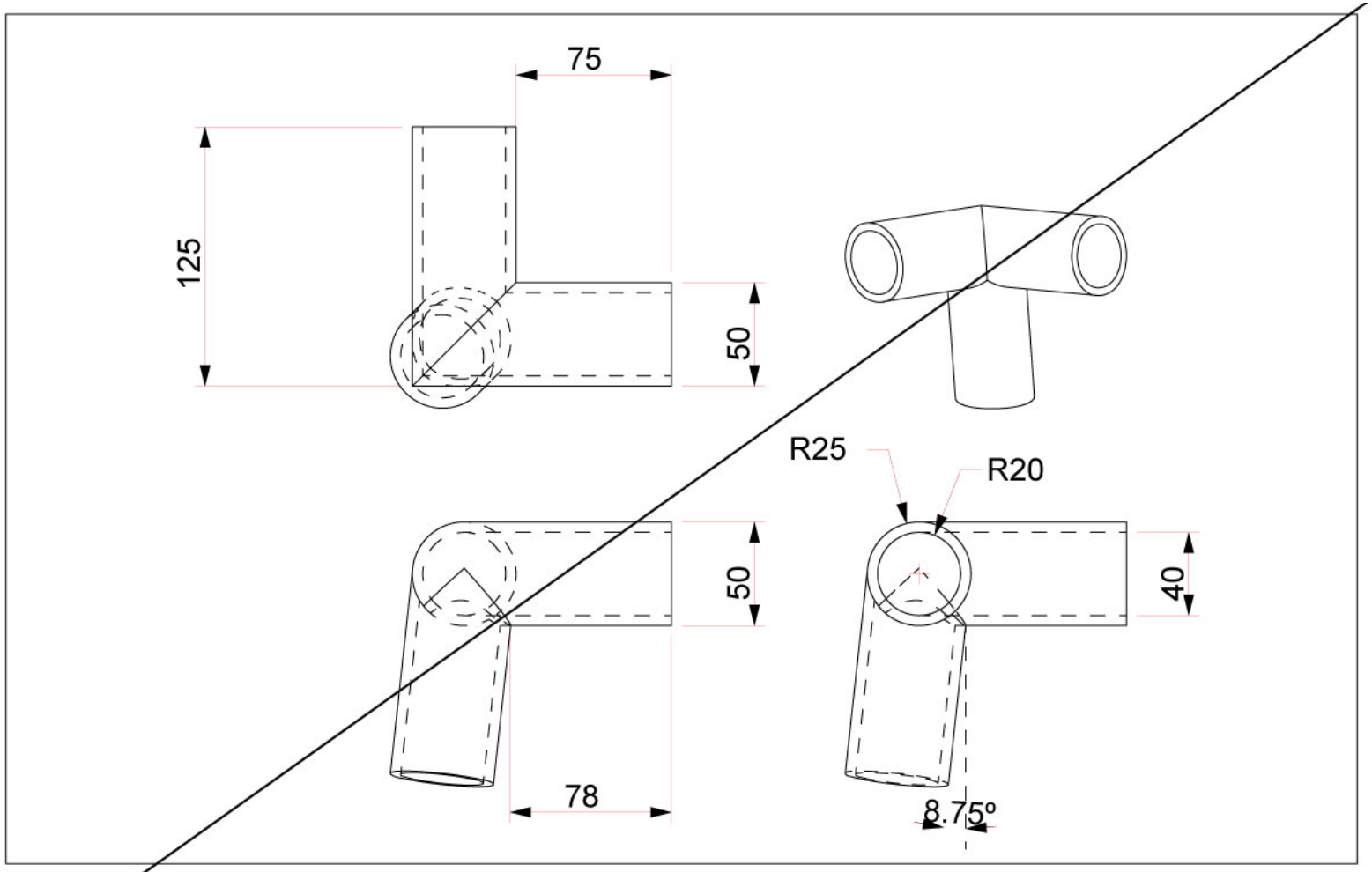

Project	Mobile Black Box	Part	01 - Corner Bracket
Concept	Semi-enclosed Mobile cinematic theater for film & video, virtual reality, serious gaming and media	Design	Lam Fung
Scale	1:2	* All dimension measured in millimeters (mm)	

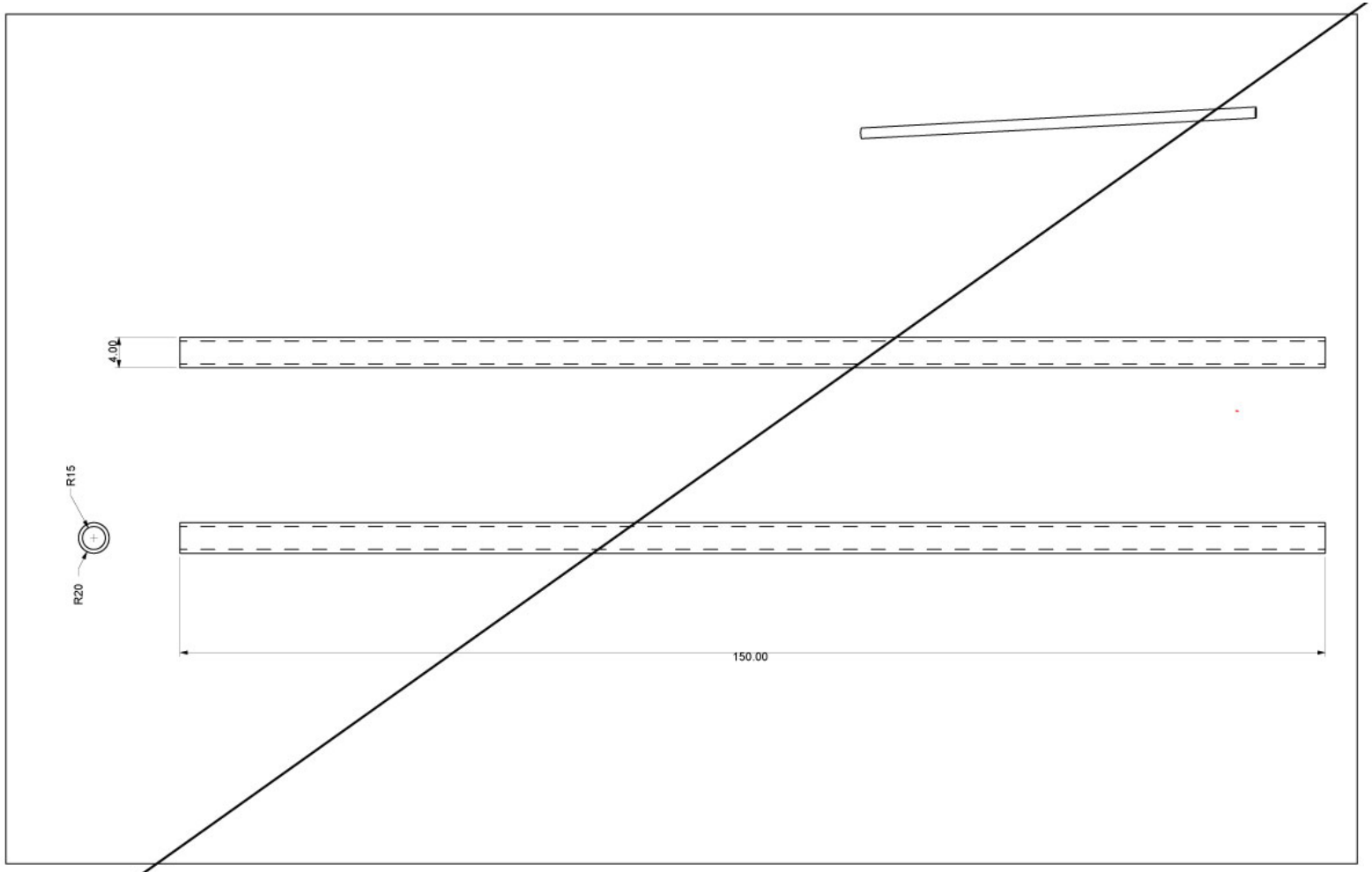

Project	Mobile Black Box	Part	02 - Top joining pole
Concept	Semi-enclosed Mobile cinematic theater for film & video, virtual reality, serious gaming and media	Design	Lam Fung
Scale	1:3	* All dimension measured in millimeters (mm)	

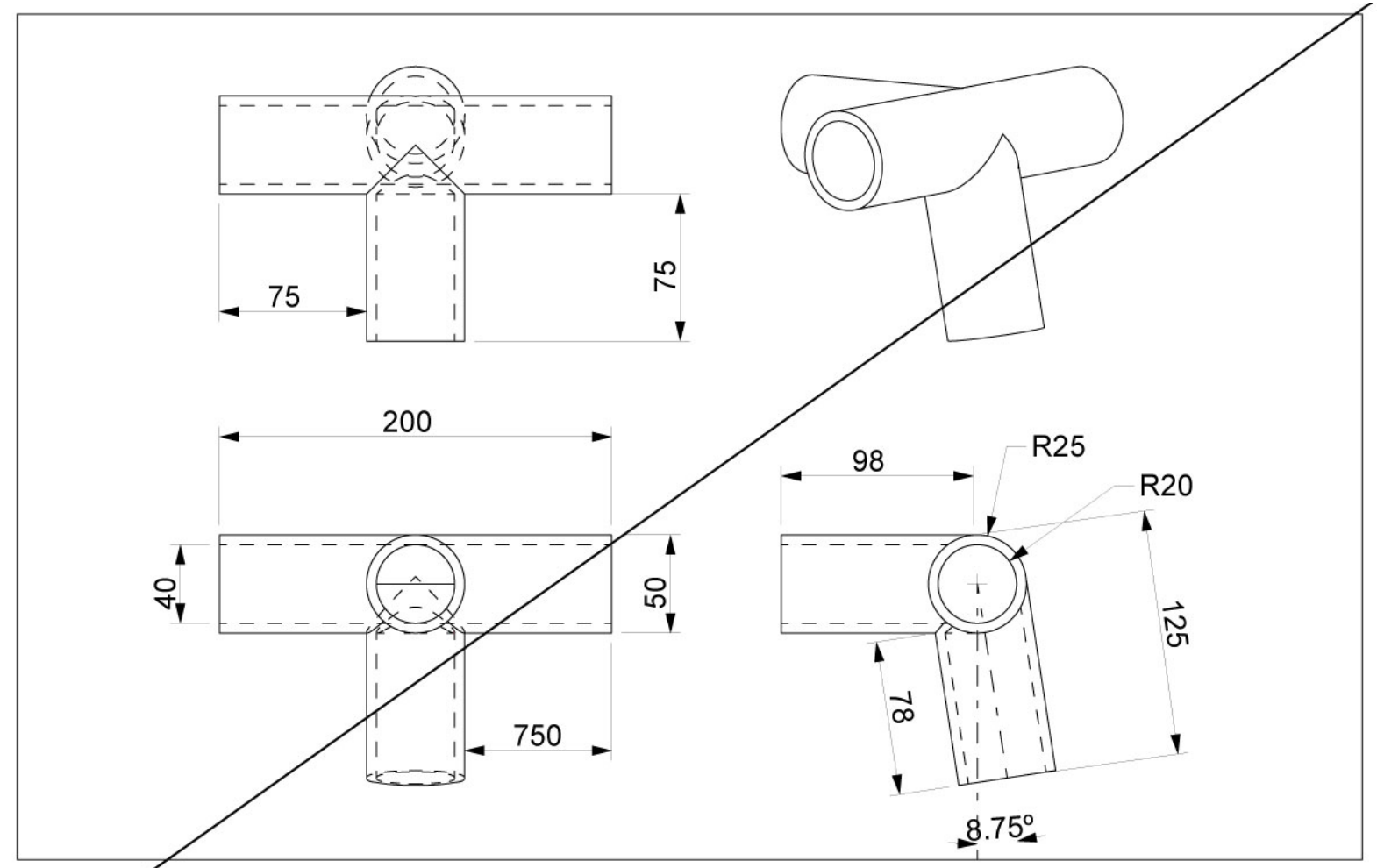

Project	Mobile Black Box	Part	03 - “T” Bracket
Concept	Semi-enclosed Mobile cinematic theater for film & video, virtual reality, serious gaming and media	Design	Lam Fung
Scale	1:2	* All dimension measured in millimeters (mm)	

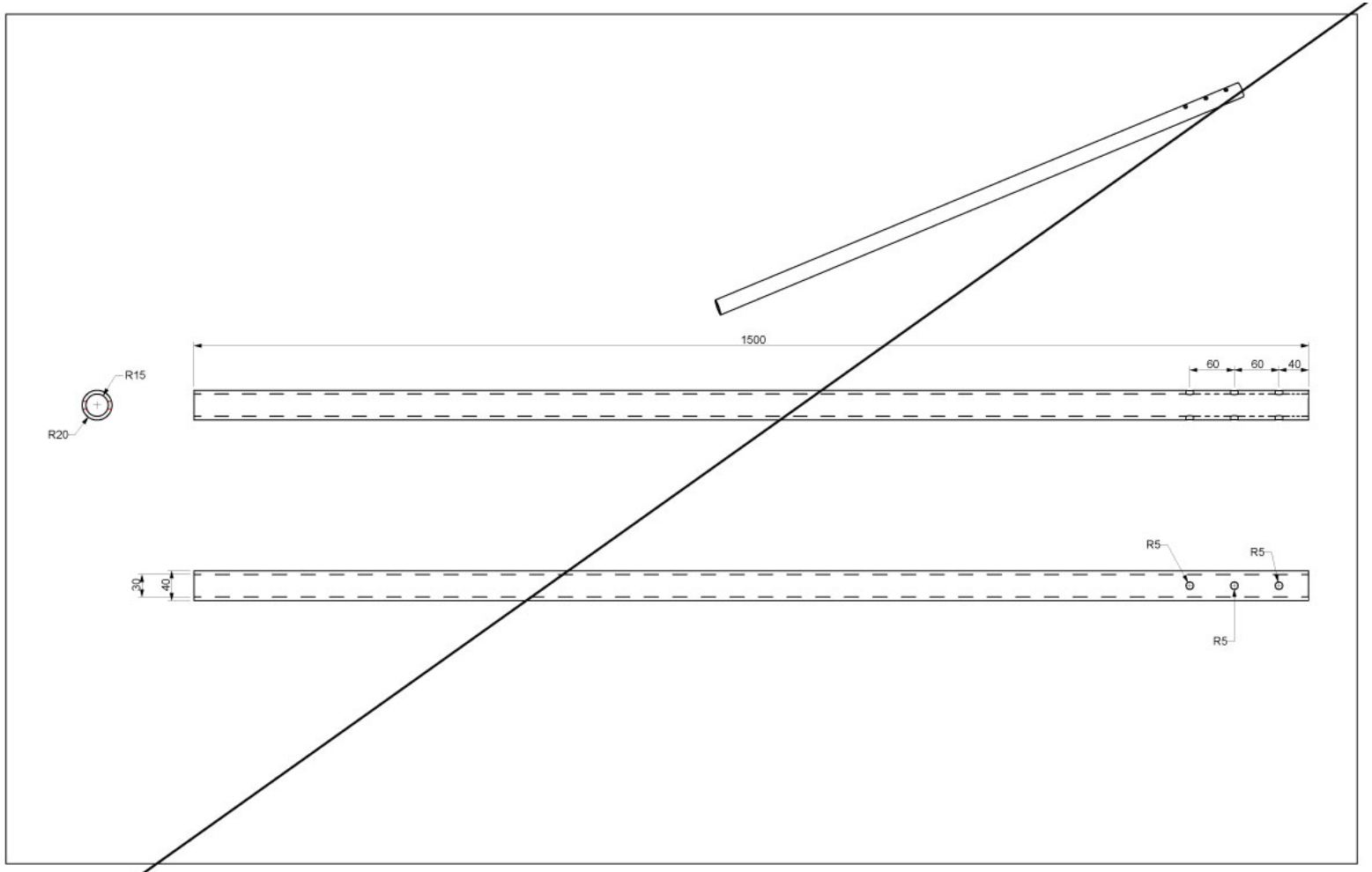

Project	Mobile Black Box	Part	04 - Standing pole (Top)
Concept	Semi-enclosed Mobile cinematic theater for film & video, virtual reality, serious gaming and media	Design	Lam Fung
Scale	1:1	* All dimension measured in millimeters (mm)	

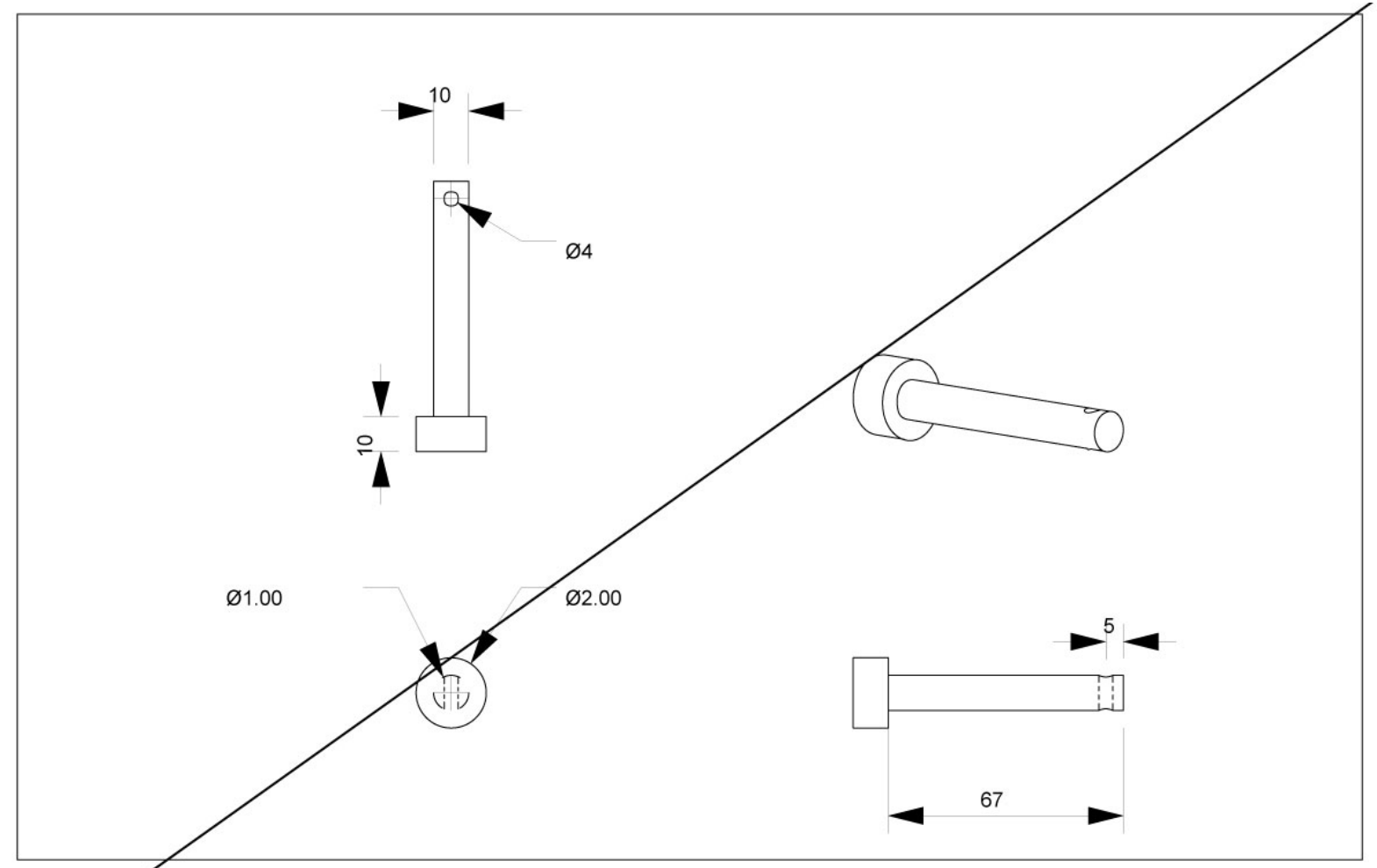

Project	Mobile Black Box	Part	05 - Standing pole key
Concept	Semi-enclosed Mobile cinematic theater for film & video, virtual reality, serious gaming and media	Design	Lam Fung
Scale	1:1	* All dimension measured in millimeters (mm)	

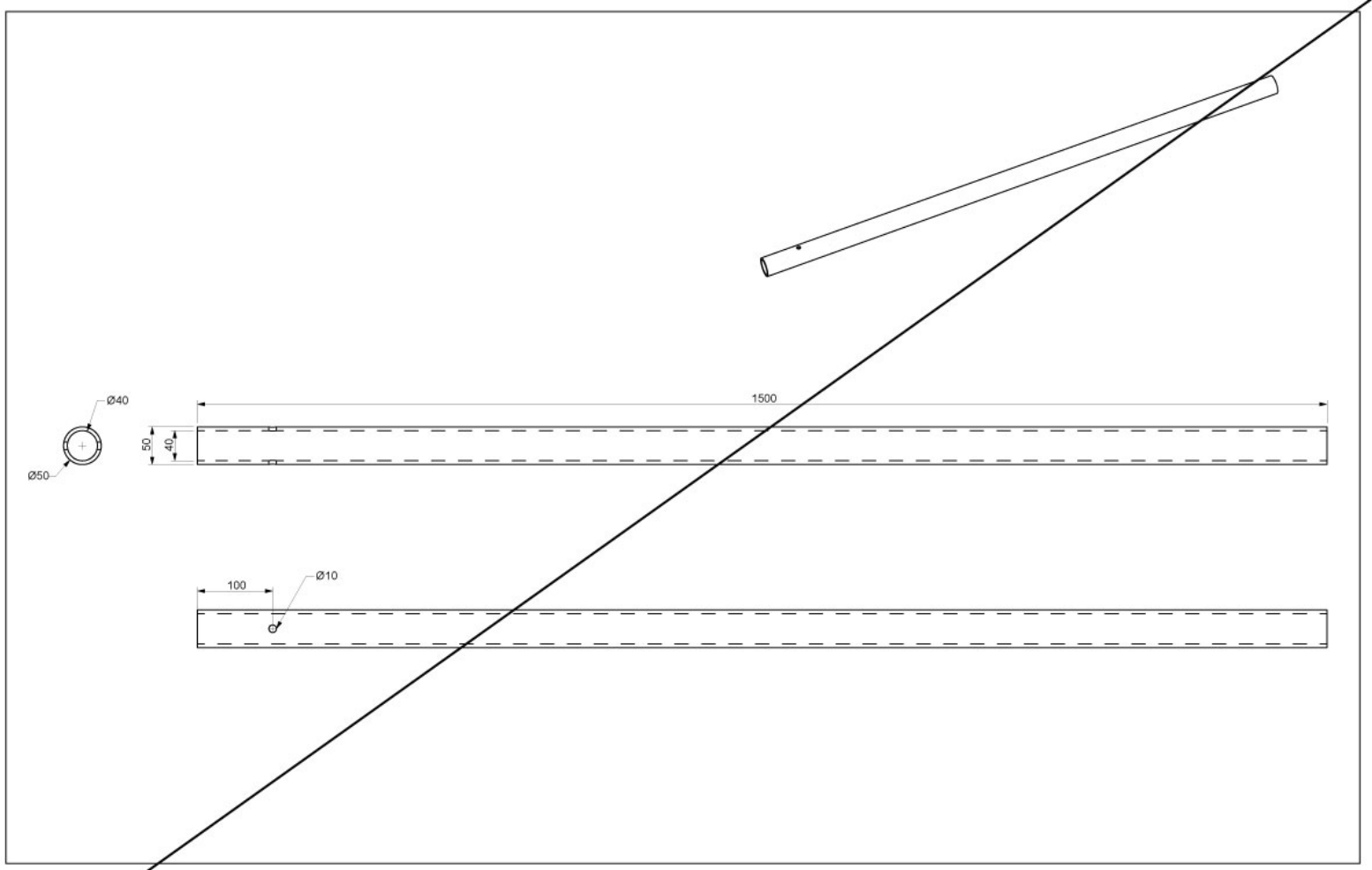

Project	Mobile Black Box	Part	06 - Standing pole (Bottom)
Concept	Semi-enclosed Mobile cinematic theater for film & video, virtual reality, serious gaming and media	Design	Lam Fung
Scale	1:1	* All dimension measured in millimeters (mm)	

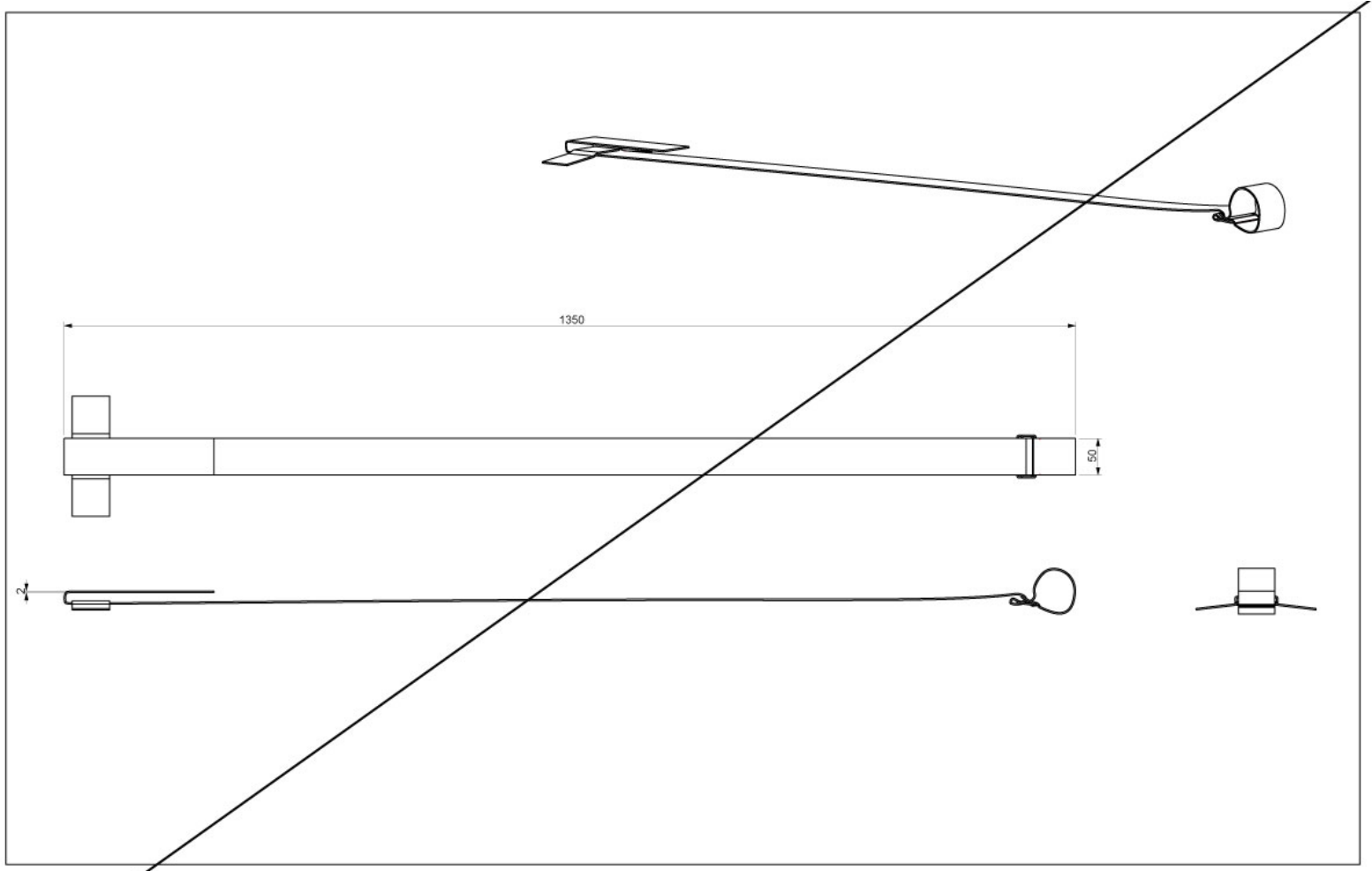

Project	Mobile Black Box	Part	07 - Hanging Side Strap
Concept	Semi-enclosed Mobile cinematic theater for film & video, virtual reality, serious gaming and media	Design	Lam Fung
Scale	1:1	* All dimension measured in millimeters (mm)	

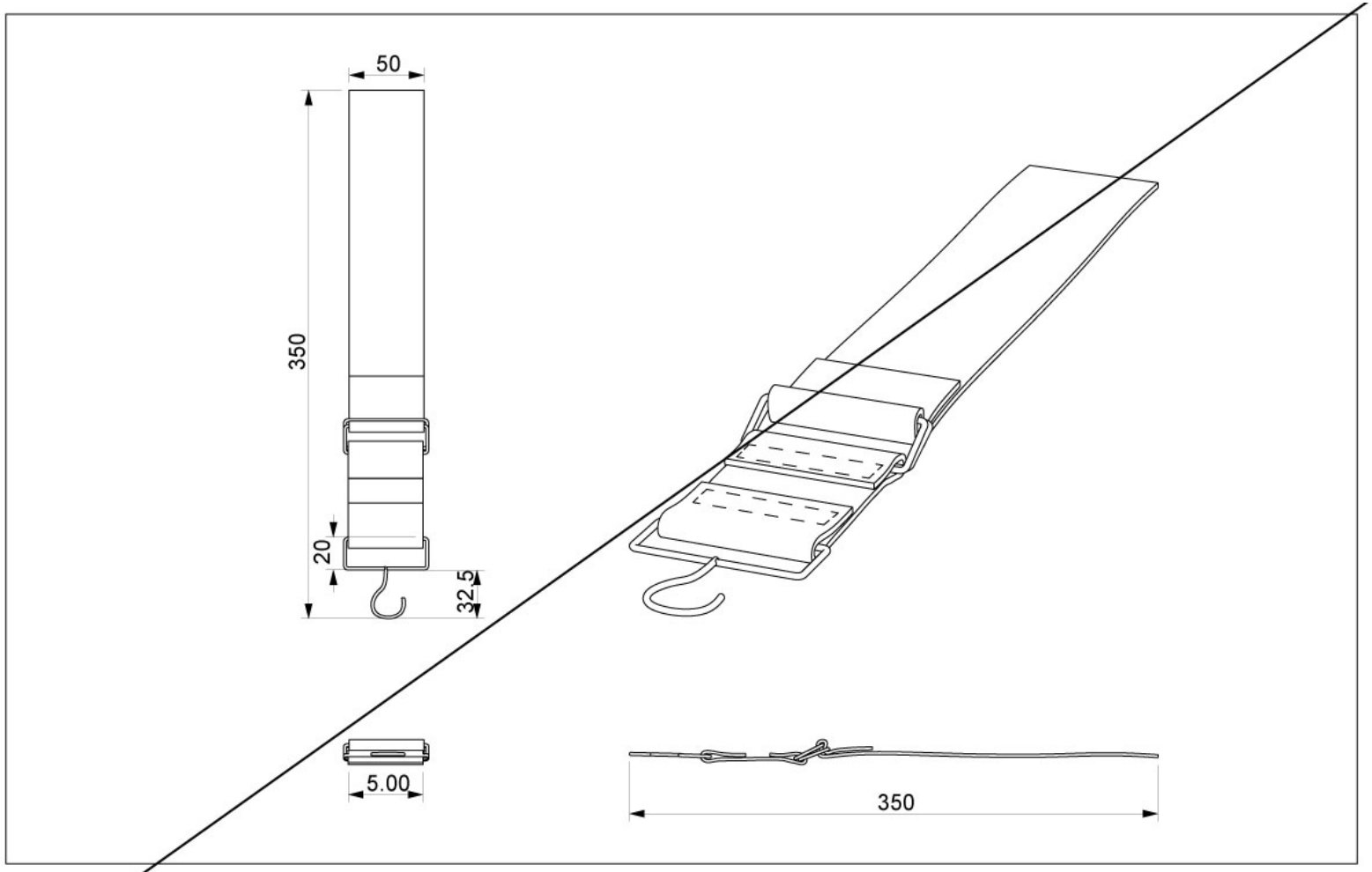

Project	Mobile Black Box	Part	08 - Side Strap
Concept	Semi-enclosed Mobile cinematic theater for film & video, virtual reality, serious gaming and media	Design	Lam Fung
Scale	1:1	* All dimension measured in millimeters (mm)	

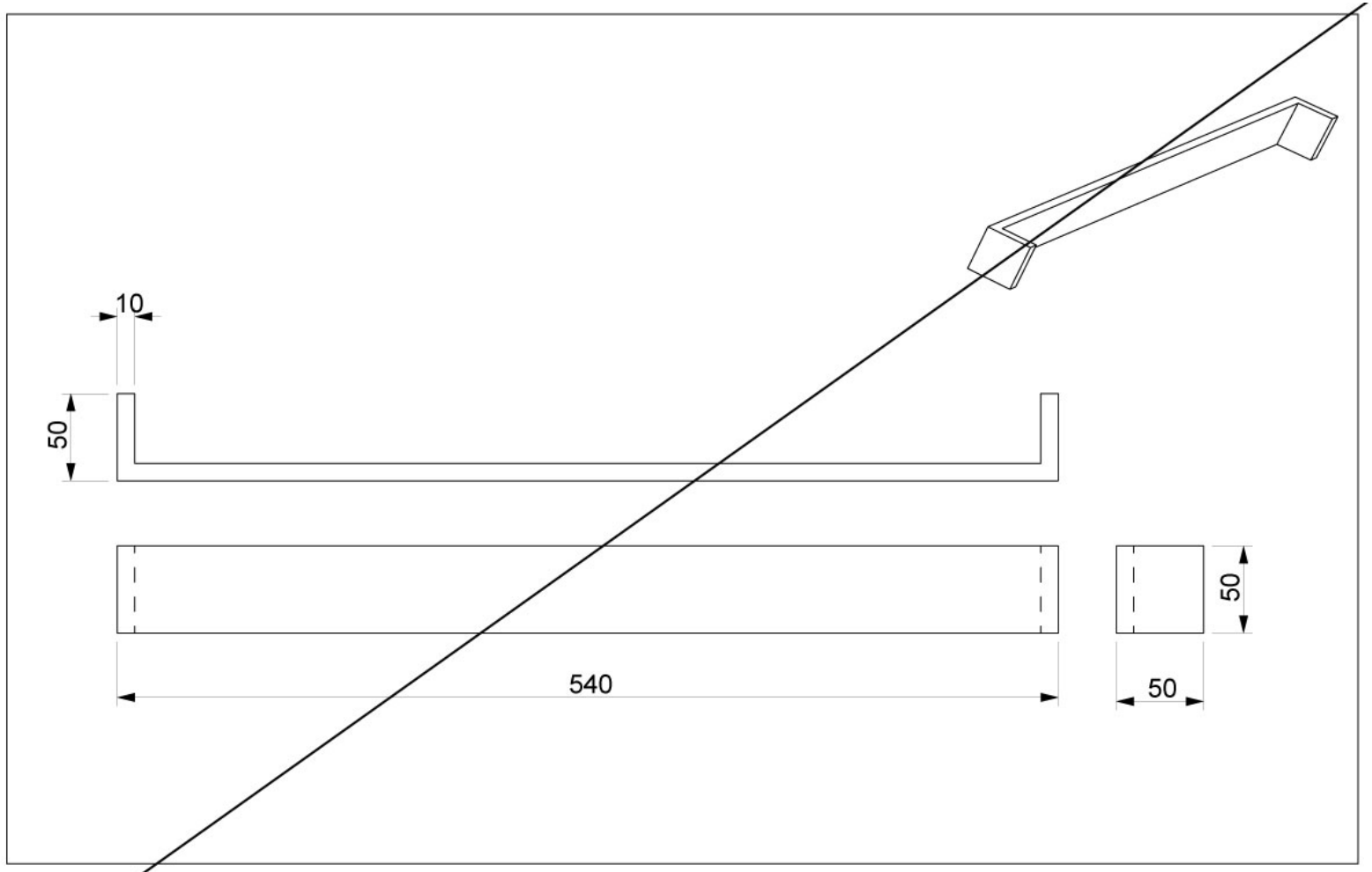

Project	Mobile Black Box	Part	09 - Projector Holder Insert
Concept	Semi-enclosed Mobile cinematic theater for film & video, virtual reality, serious gaming and media	Design	Lam Fung
Scale	1:2	* All dimension measured in millimeters (mm)	

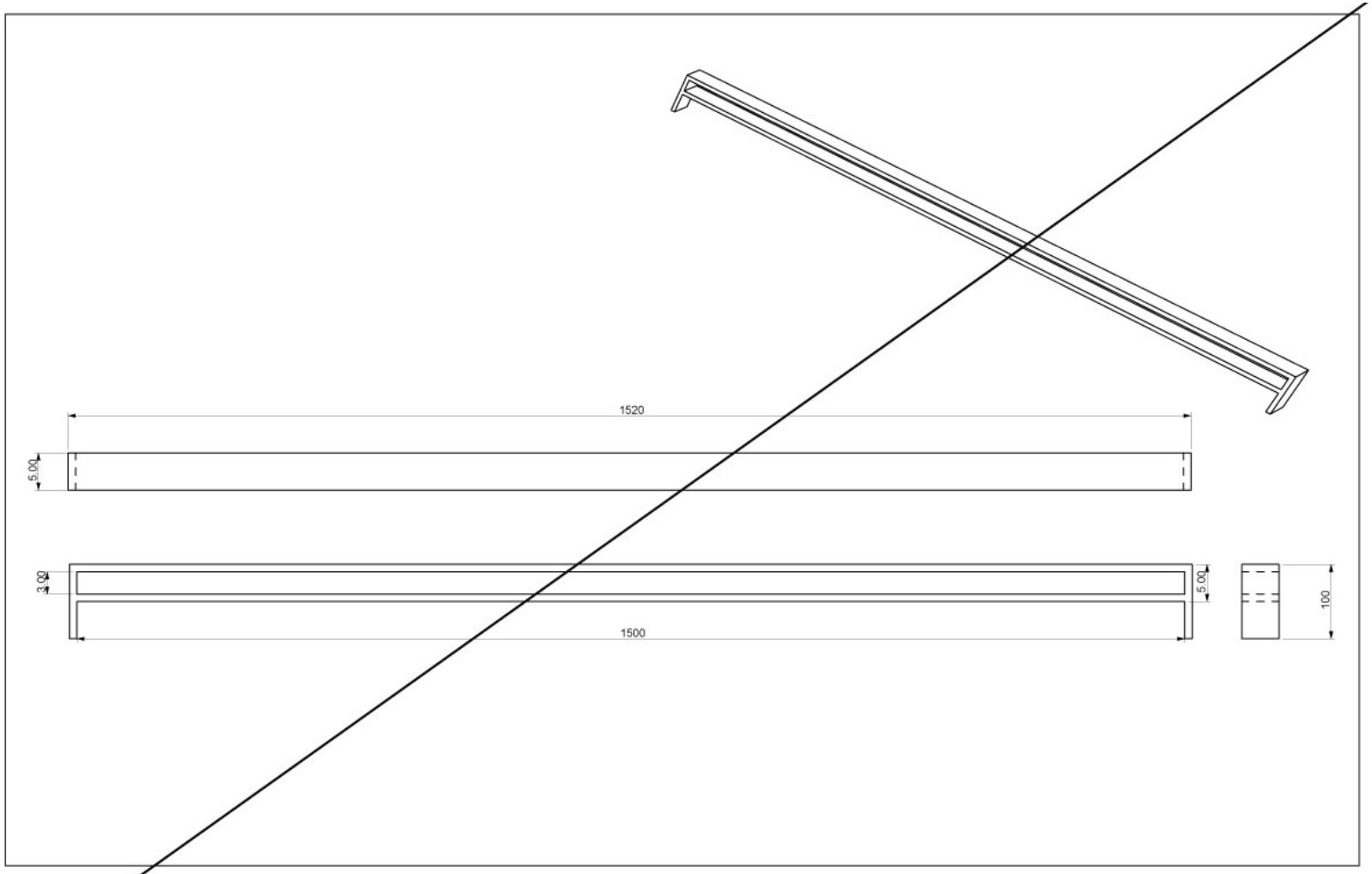

Project	Mobile Black Box	Part	10 - Projector Holder
Concept	Semi-enclosed Mobile cinematic theater for film & video, virtual reality, serious gaming and media	Design	Lam Fung
Scale	1:3	* All dimension measured in millimeters (mm)	

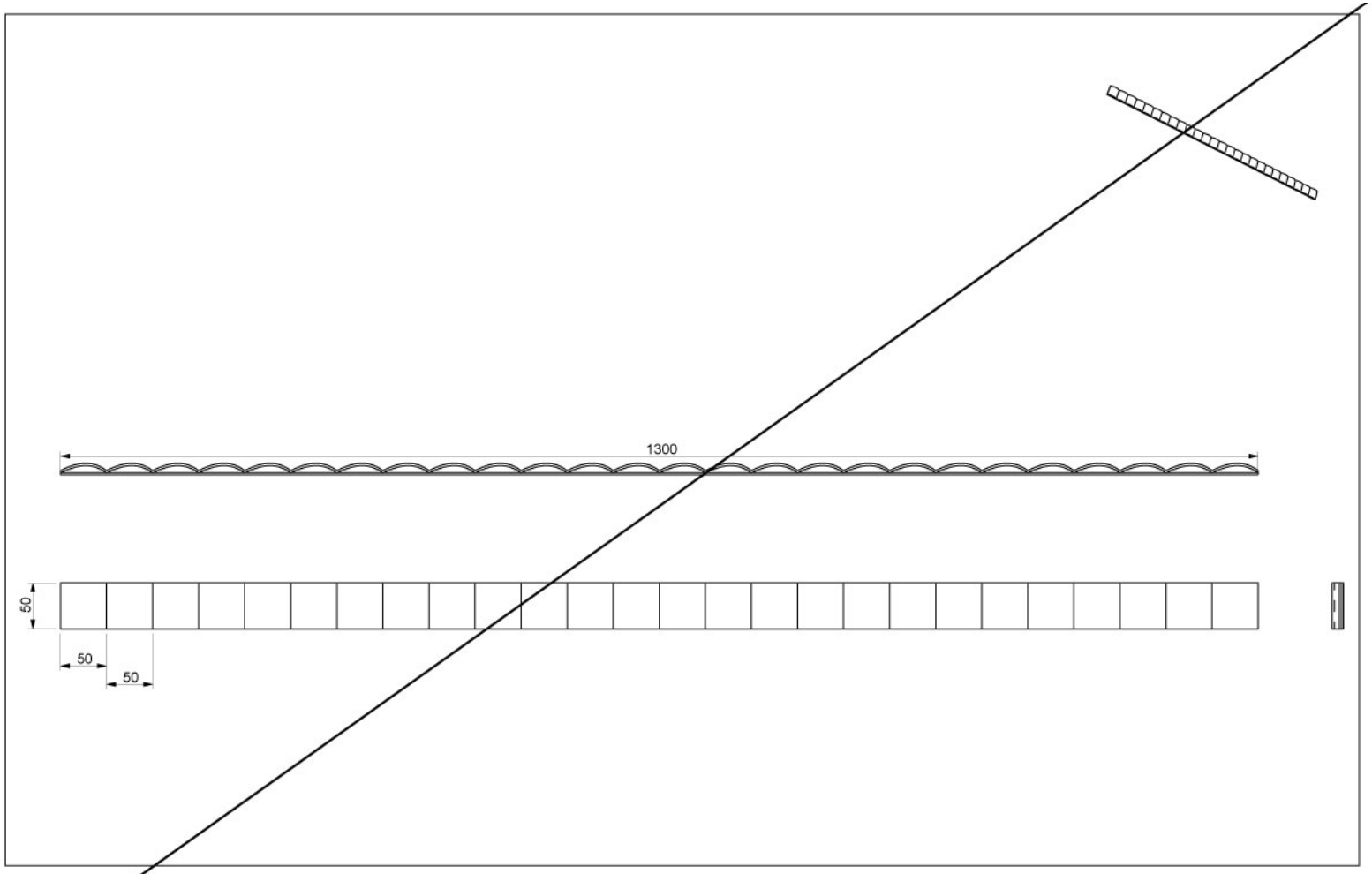

Project	Mobile Black Box	Part	11 - Multi-purpose mounting point
Concept	Semi-enclosed Mobile cinematic theater for film & video, virtual reality, serious gaming and media	Design	Lam Fung
Scale	1:3	* All dimension measured in millimeters (mm)	

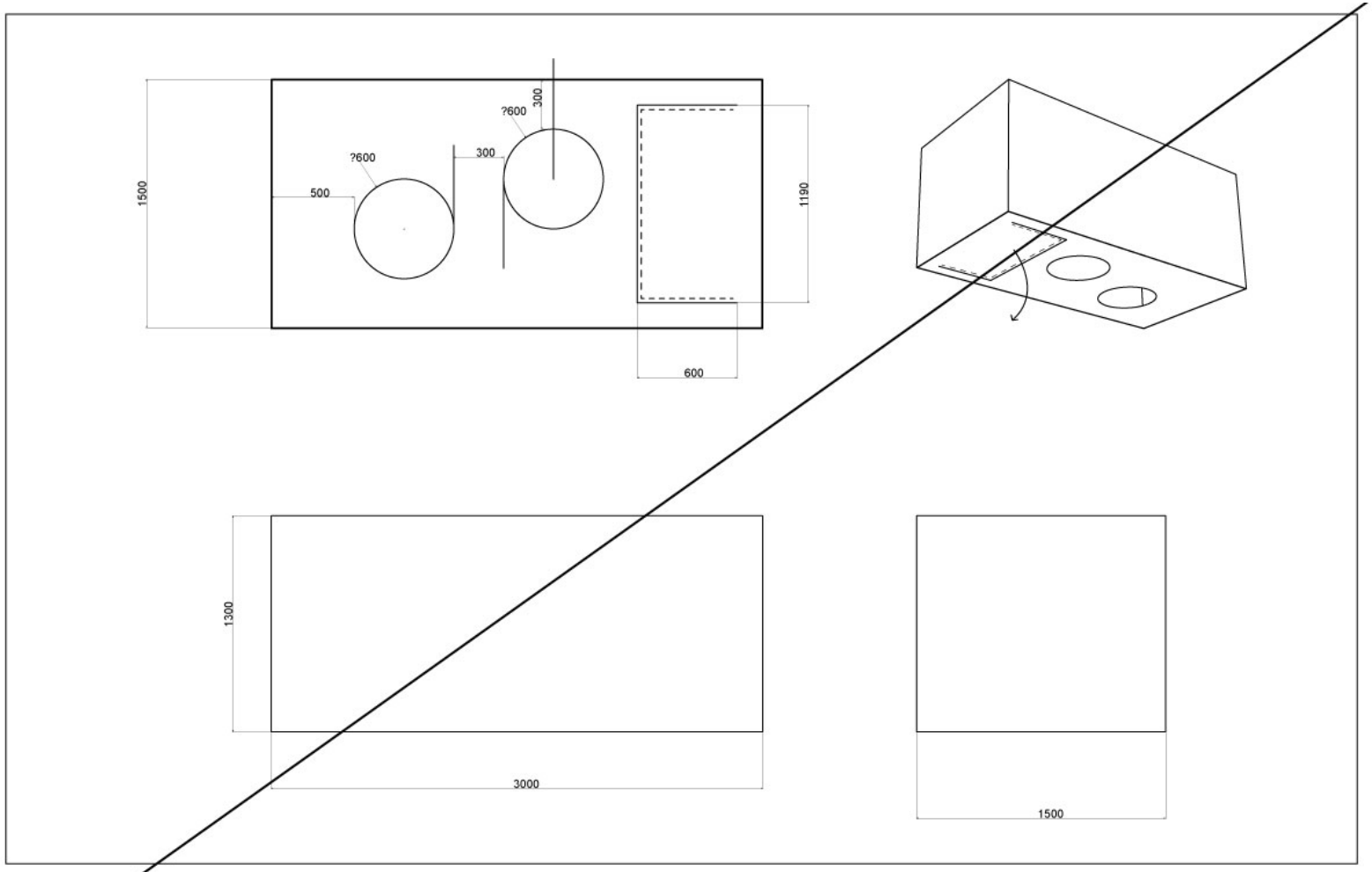

Project	Mobile Black Box	Part	12 - Theater Box
Concept	Semi-enclosed Mobile cinematic theater for film & video, virtual reality, serious gaming and media	Design	Lam Fung
Scale	1:4	* All dimension measured in millimeters (mm)	

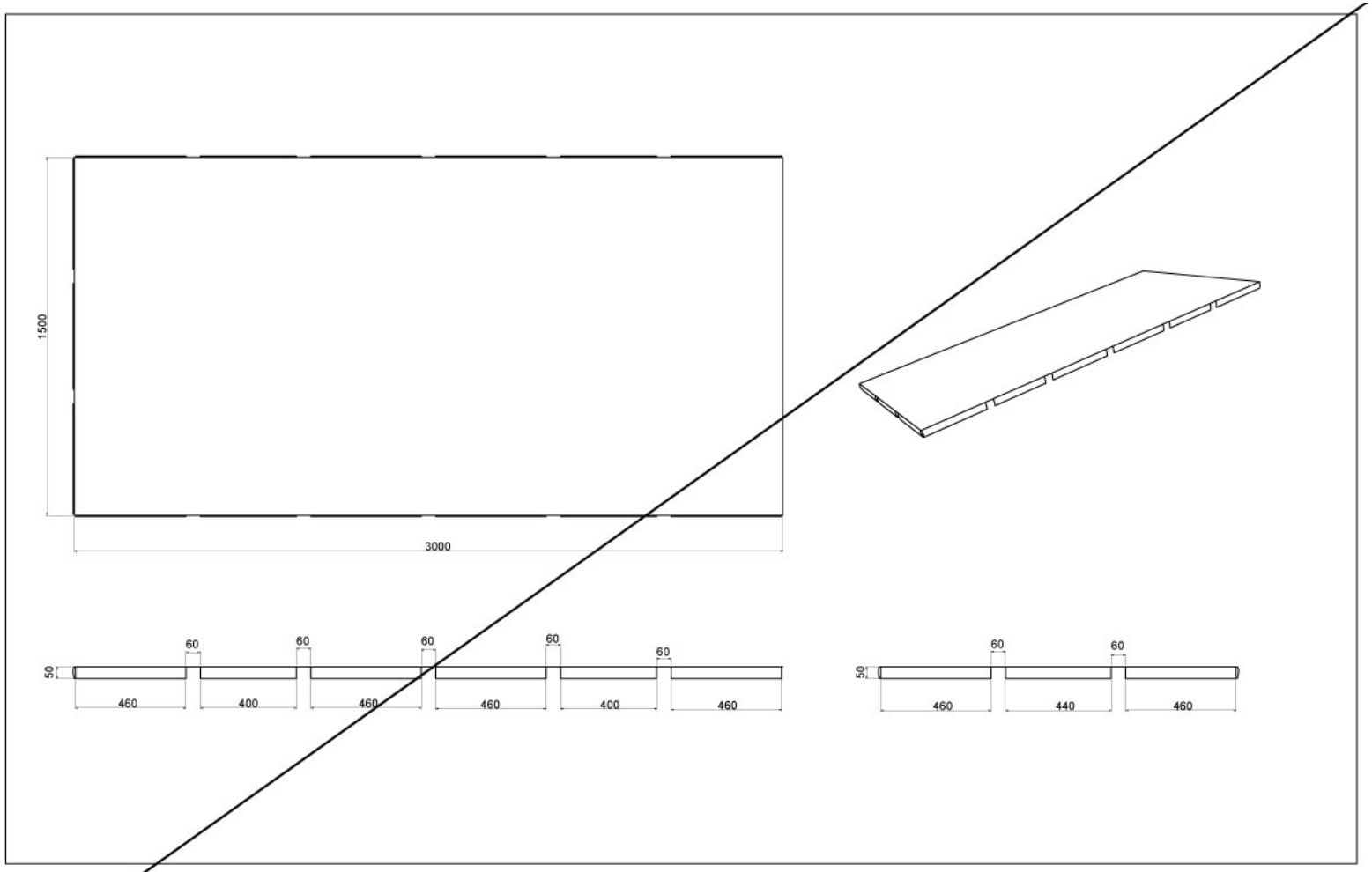

Project	Mobile Black Box	Part	13 - Theater Box Top Cover
Concept	Semi-enclosed Mobile cinematic theater for film & video, virtual reality, serious gaming and media	Design	Lam Fung
Scale	1:3	* All dimension measured in millimeters (mm)	

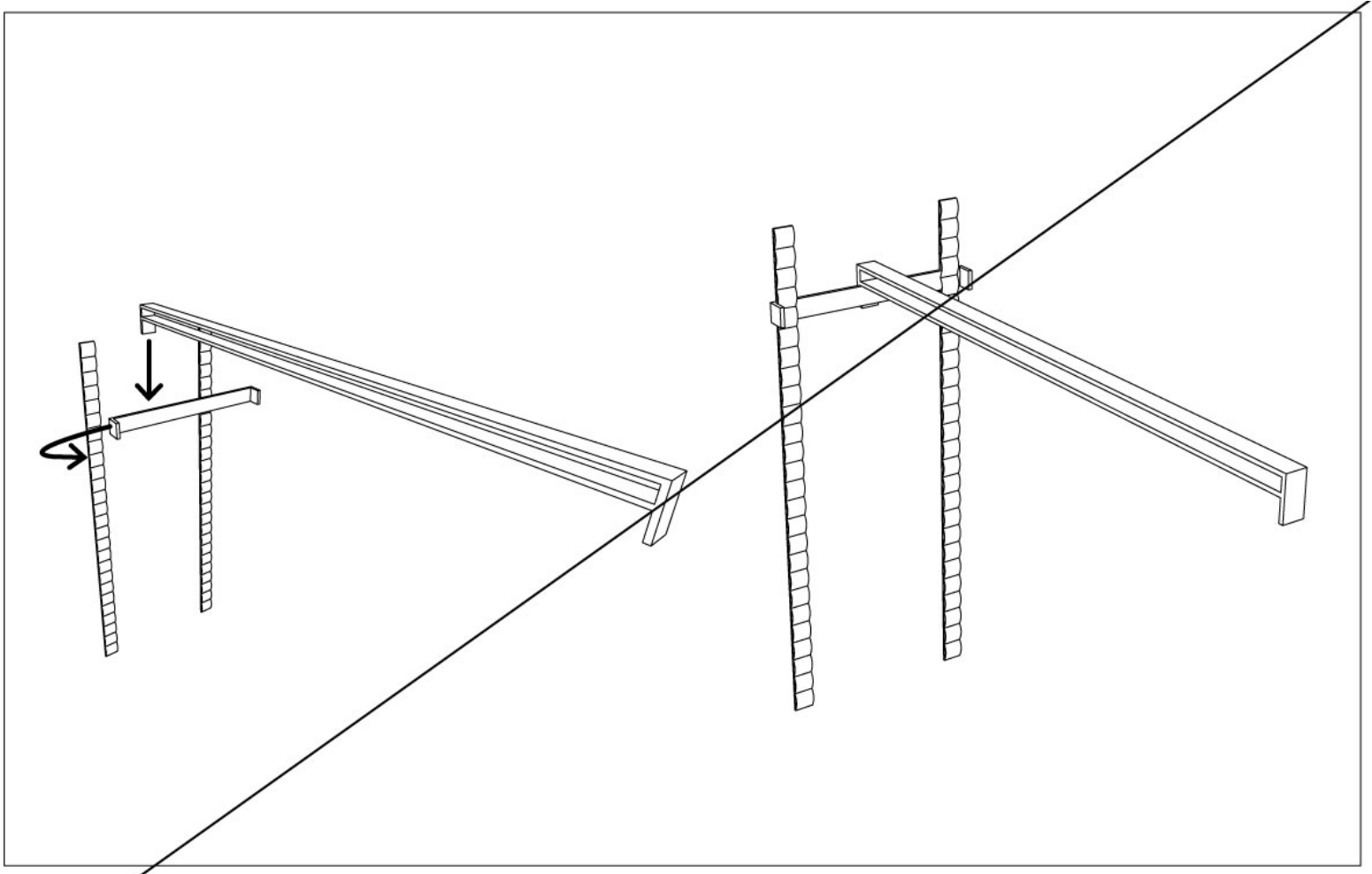

Project	Mobile Black Box	Part	Assembly 01 - Projector mounting
Concept	Semi-enclosed Mobile cinematic theater for film & video, virtual reality, serious gaming and media	Design	Lam Fung
Scale	1:5	* All dimension measured in millimeters (mm)	

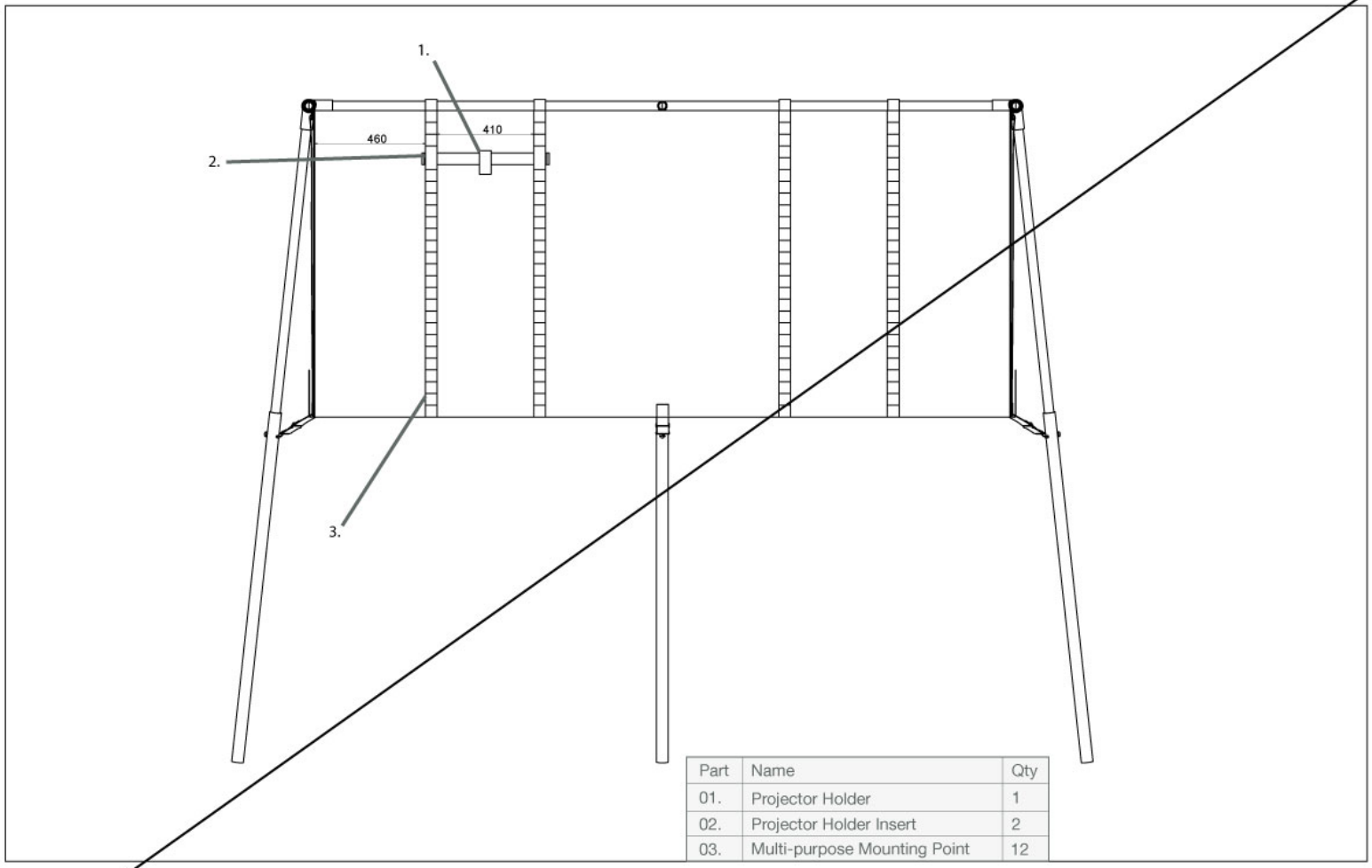

Part	Name	Qty
01.	Projector Holder	1
02.	Projector Holder Insert	2
03.	Multi-purpose Mounting Point	12

Project	Mobile Black Box	Part	Assembly 02 - Interior Side View
Concept	Semi-enclosed Mobile cinematic theater for film & video, virtual reality, serious gaming and media	Design	Lam Fung
Scale	1:3	* All dimension measured in millimeters (mm)	

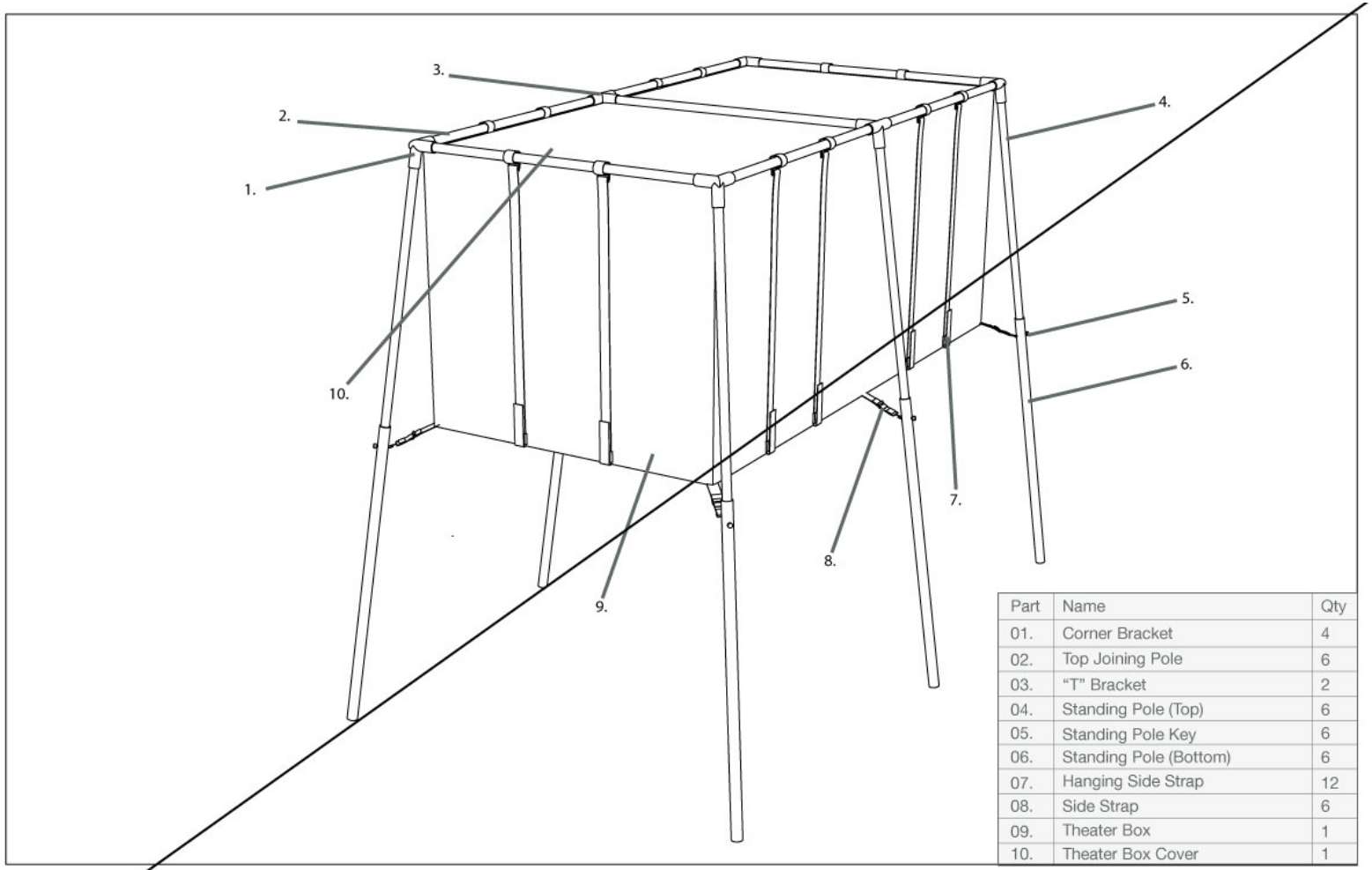

Part	Name	Qty
01.	Corner Bracket	4
02.	Top Joining Pole	6
03.	“T” Bracket	2
04.	Standing Pole (Top)	6
05.	Standing Pole Key	6
06.	Standing Pole (Bottom)	6
07.	Hanging Side Strap	12
08.	Side Strap	6
09.	Theater Box	1
10.	Theater Box Cover	1

Project	Mobile Black Box	Part	Assembly 03 - Mobile Black Box
Concept	Semi-enclosed Mobile cinematic theater for film & video, virtual reality, serious gaming and media	Design	Lam Fung
Scale	1:4	* All dimension measured in millimeters (mm)	

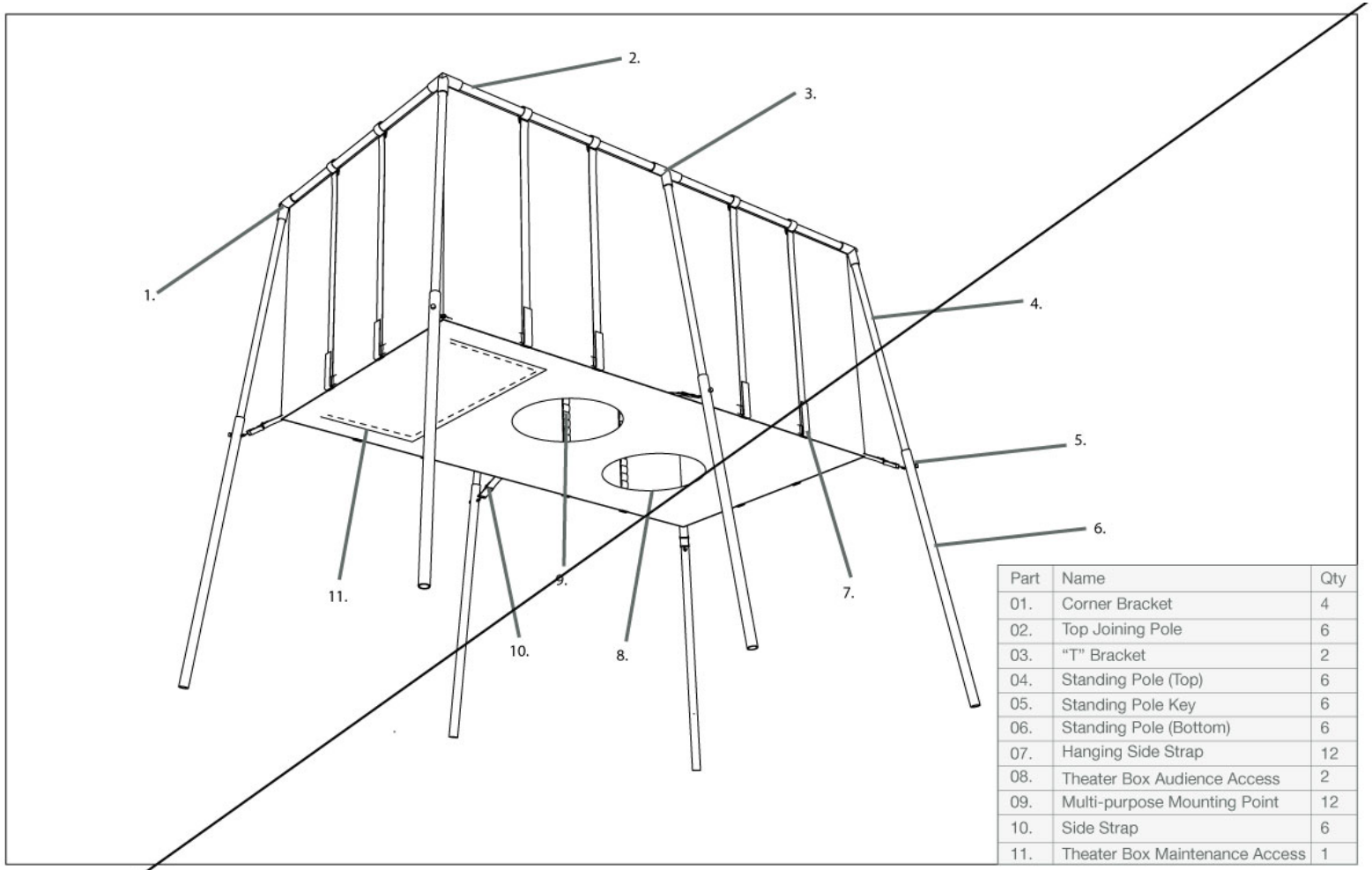

Part	Name	Qty
01.	Corner Bracket	4
02.	Top Joining Pole	6
03.	“T” Bracket	2
04.	Standing Pole (Top)	6
05.	Standing Pole Key	6
06.	Standing Pole (Bottom)	6
07.	Hanging Side Strap	12
08.	Theater Box Audience Access	2
09.	Multi-purpose Mounting Point	12
10.	Side Strap	6
11.	Theater Box Maintenance Access	1

Project	Mobile Black Box	Part	Assembly 04- Mobile Black Box (2)
Concept	Semi-enclosed Mobile cinematic theater for film & video, virtual reality, serious gaming and media	Design	Lam Fung
Scale	1:4	* All dimension measured in millimeters (mm)	

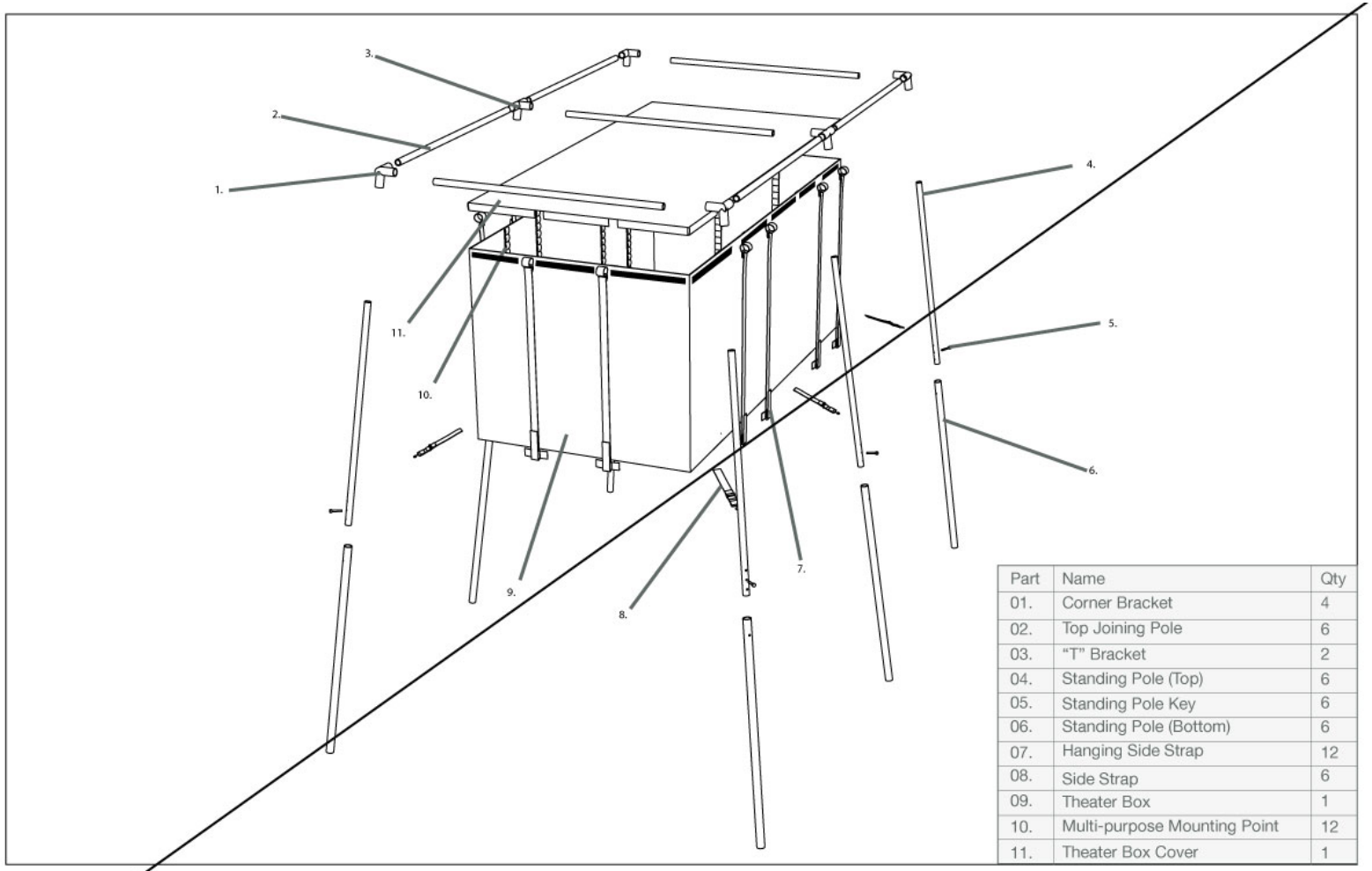

Part	Name	Qty
01.	Corner Bracket	4
02.	Top Joining Pole	6
03.	“T” Bracket	2
04.	Standing Pole (Top)	6
05.	Standing Pole Key	6
06.	Standing Pole (Bottom)	6
07.	Hanging Side Strap	12
08.	Side Strap	6
09.	Theater Box	1
10.	Multi-purpose Mounting Point	12
11.	Theater Box Cover	1

Project	Mobile Black Box	Part	Assembly 05 - Mobile Black Box (Exploded)
Concept	Semi-enclosed Mobile cinematic theater for film & video, virtual reality, serious gaming and media	Design	Lam Fung
Scale	1:4	* All dimension measured in millimeters (mm)	

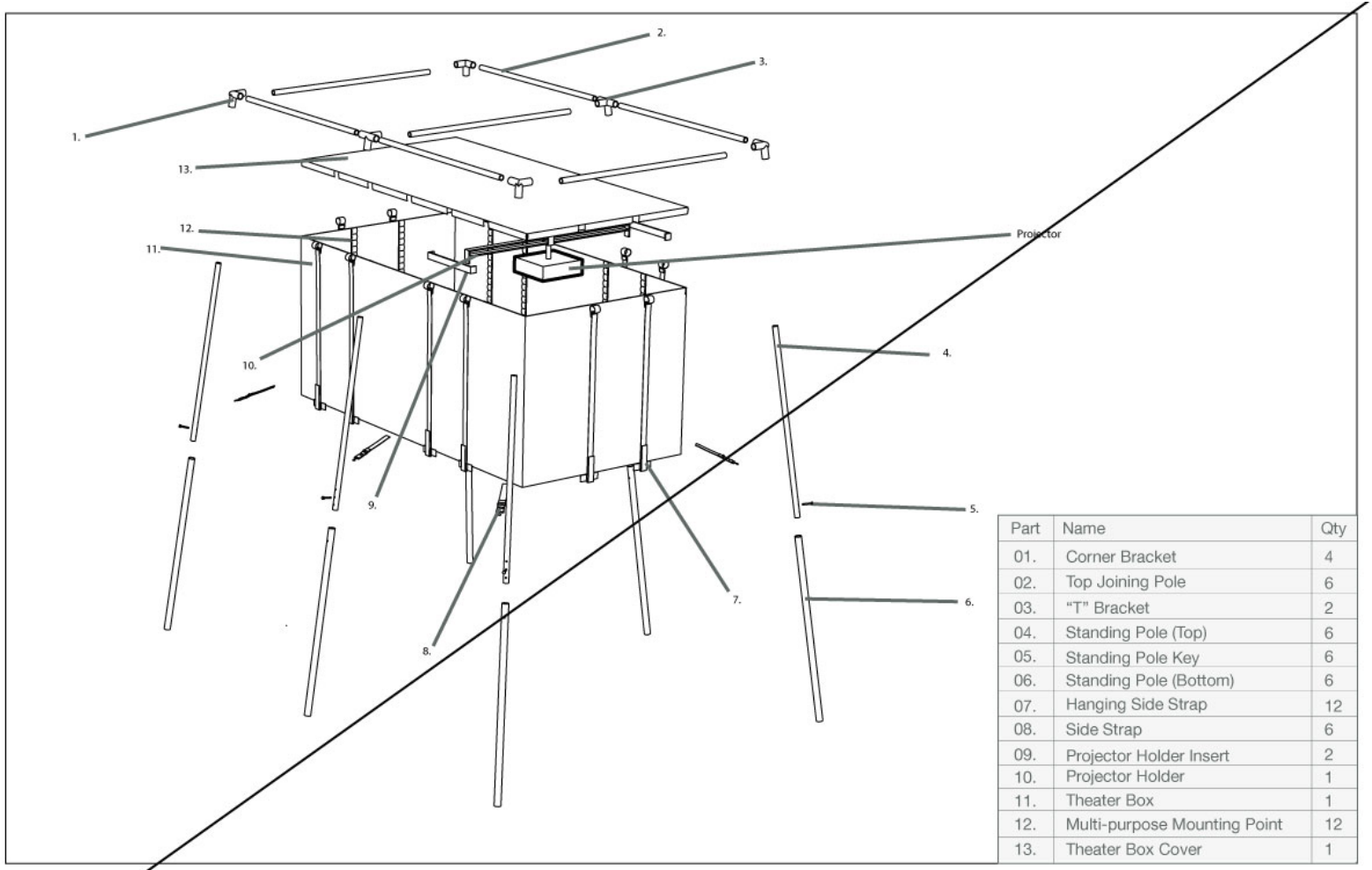

Part	Name	Qty
01.	Corner Bracket	4
02.	Top Joining Pole	6
03.	“T” Bracket	2
04.	Standing Pole (Top)	6
05.	Standing Pole Key	6
06.	Standing Pole (Bottom)	6
07.	Hanging Side Strap	12
08.	Side Strap	6
09.	Projector Holder Insert	2
10.	Projector Holder	1
11.	Theater Box	1
12.	Multi-purpose Mounting Point	12
13.	Theater Box Cover	1

Project	Mobile Black Box	Part	Assembly 06 - Mobile Black Box (Exploded2)
Concept	Semi-enclosed Mobile cinematic theater for film & video, virtual reality, serious gaming and media	Design	Lam Fung
Scale	1:4	* All dimension measured in millimeters (mm)	