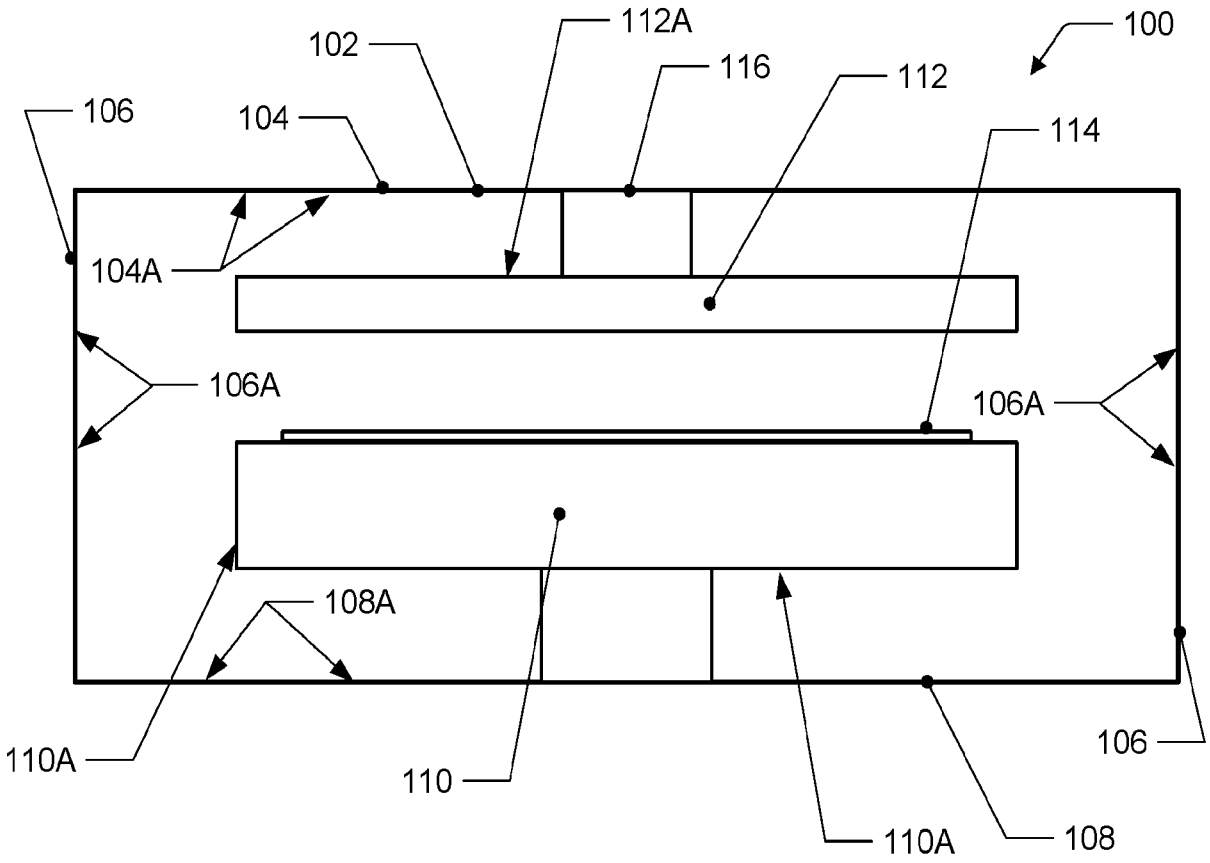
102
112A
100
116
112
106
104
114
104A
106A
106A
108A
110A
110
106
110A
108

FIG. 1A

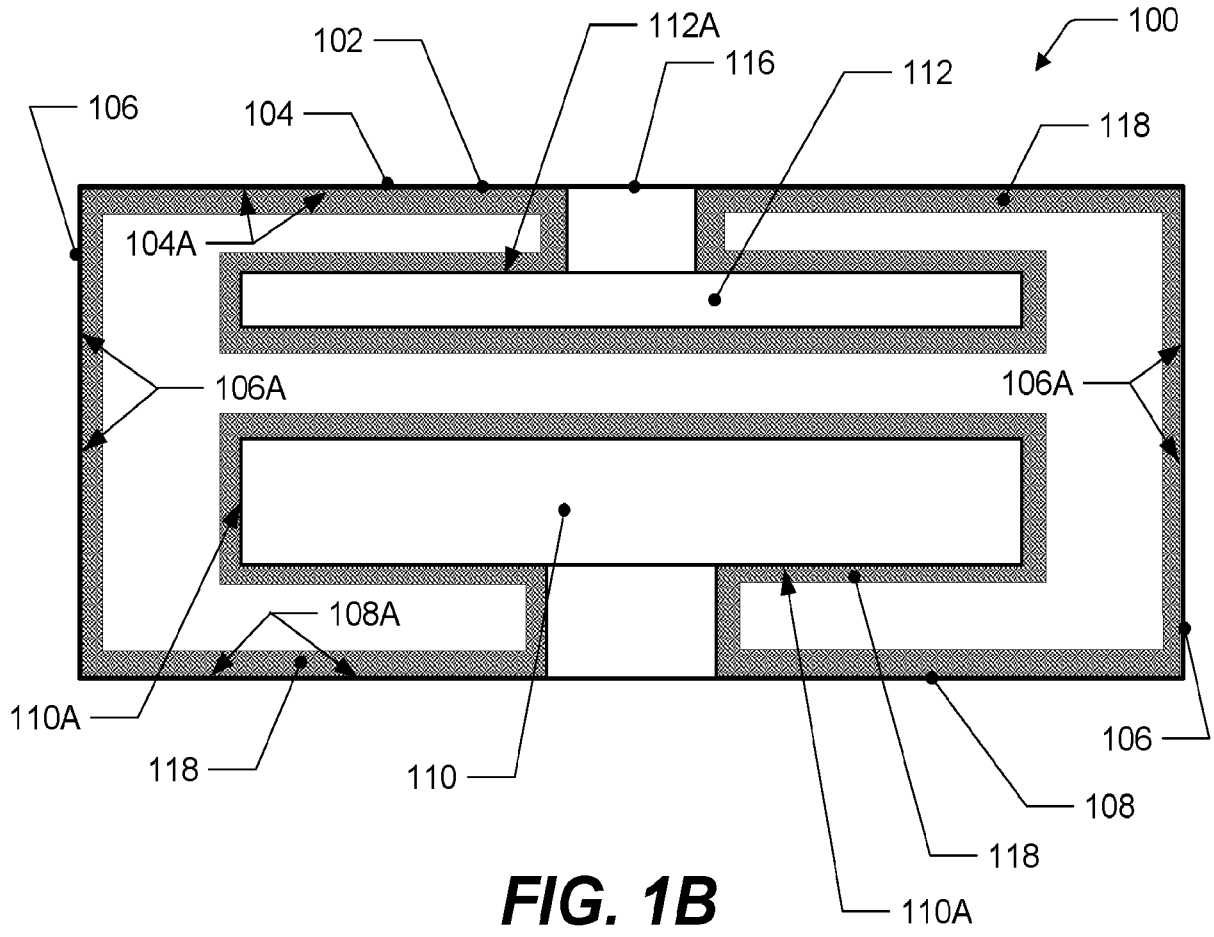
102
112A
100
116
112
106
104
118
104A
106A
106A
108A
110A
118
110
106
108
118
110A

FIG. 1B

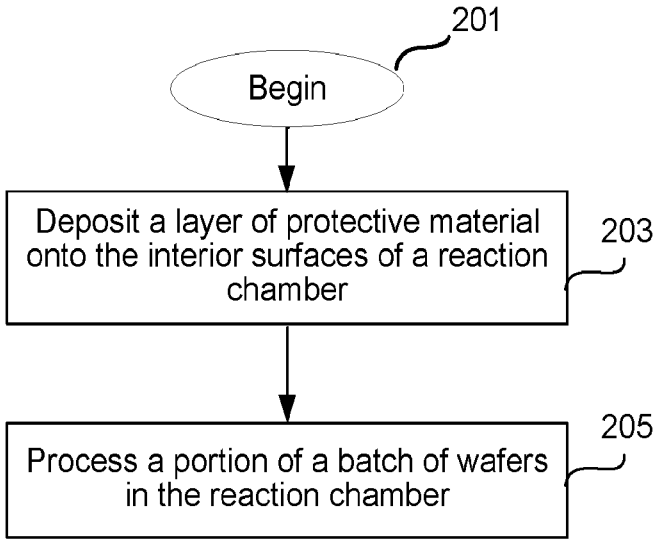
201
Begin
Deposit a layer of protective material onto the interior surfaces of a reaction chamber
203
Process a portion of a batch of wafers in the reaction chamber
205

FIG. 2

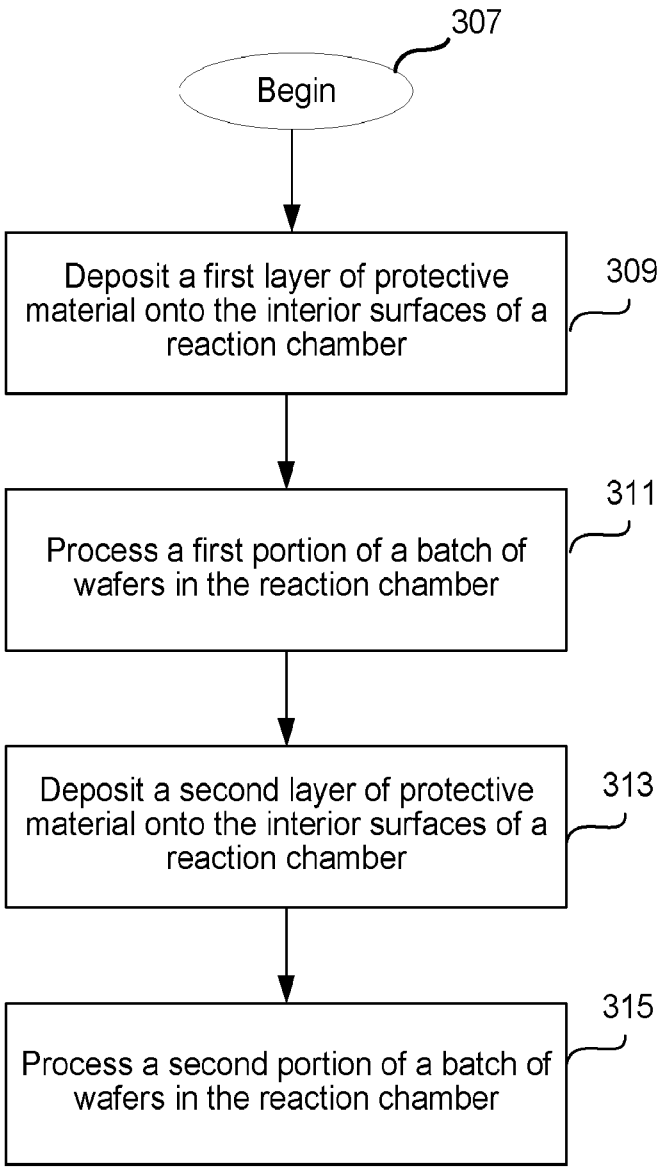
307
Begin
Deposit a first layer of protective material onto the interior surfaces of a reaction chamber
309
Process a first portion of a batch of wafers in the reaction chamber
311
Deposit a second layer of protective material onto the interior surfaces of a reaction chamber
313
Process a second portion of a batch of wafers in the reaction chamber
315

FIG. 3

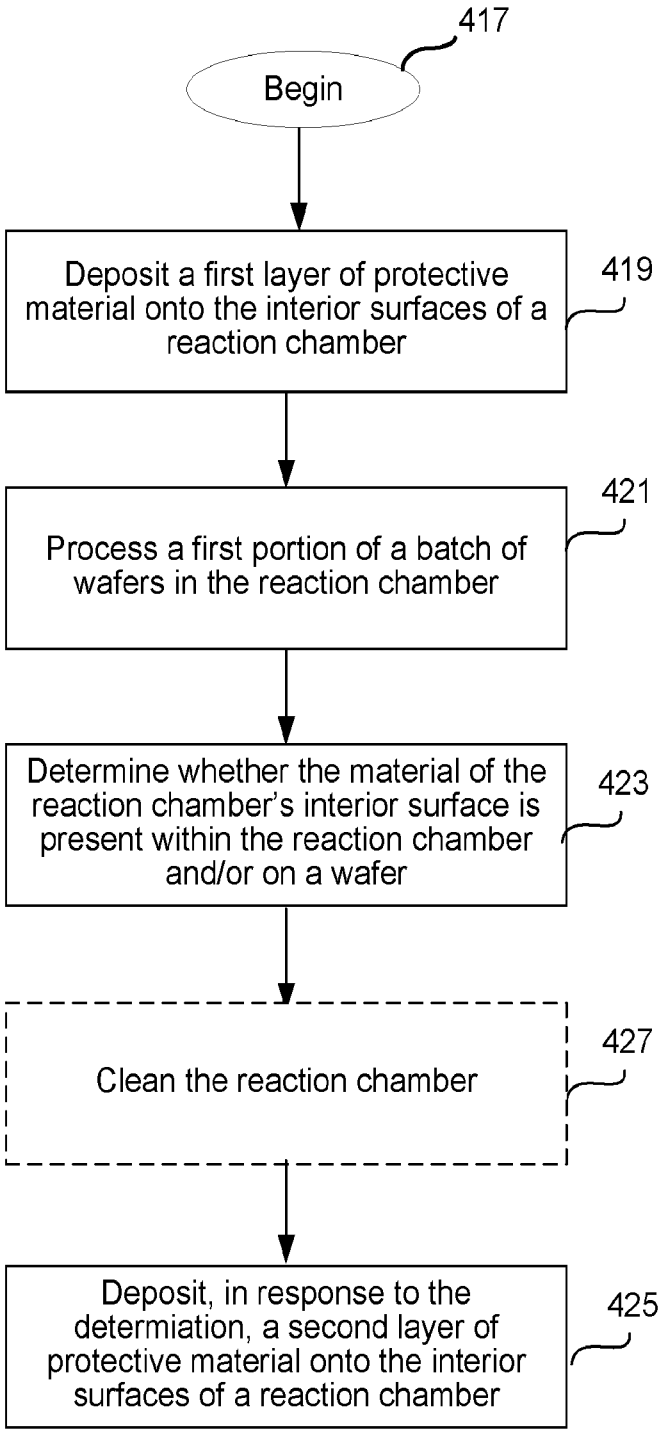
417
Begin
Deposit a first layer of protective material onto the interior surfaces of a reaction chamber
419
Process a first portion of a batch of wafers in the reaction chamber
421
Determine whether the material of the reaction chamber's interior surface is present within the reaction chamber and/or on a wafer
423
Clean the reaction chamber
427
Deposit, in response to the determiation, a second layer of protective material onto the interior surfaces of a reaction chamber
425

FIG. 4

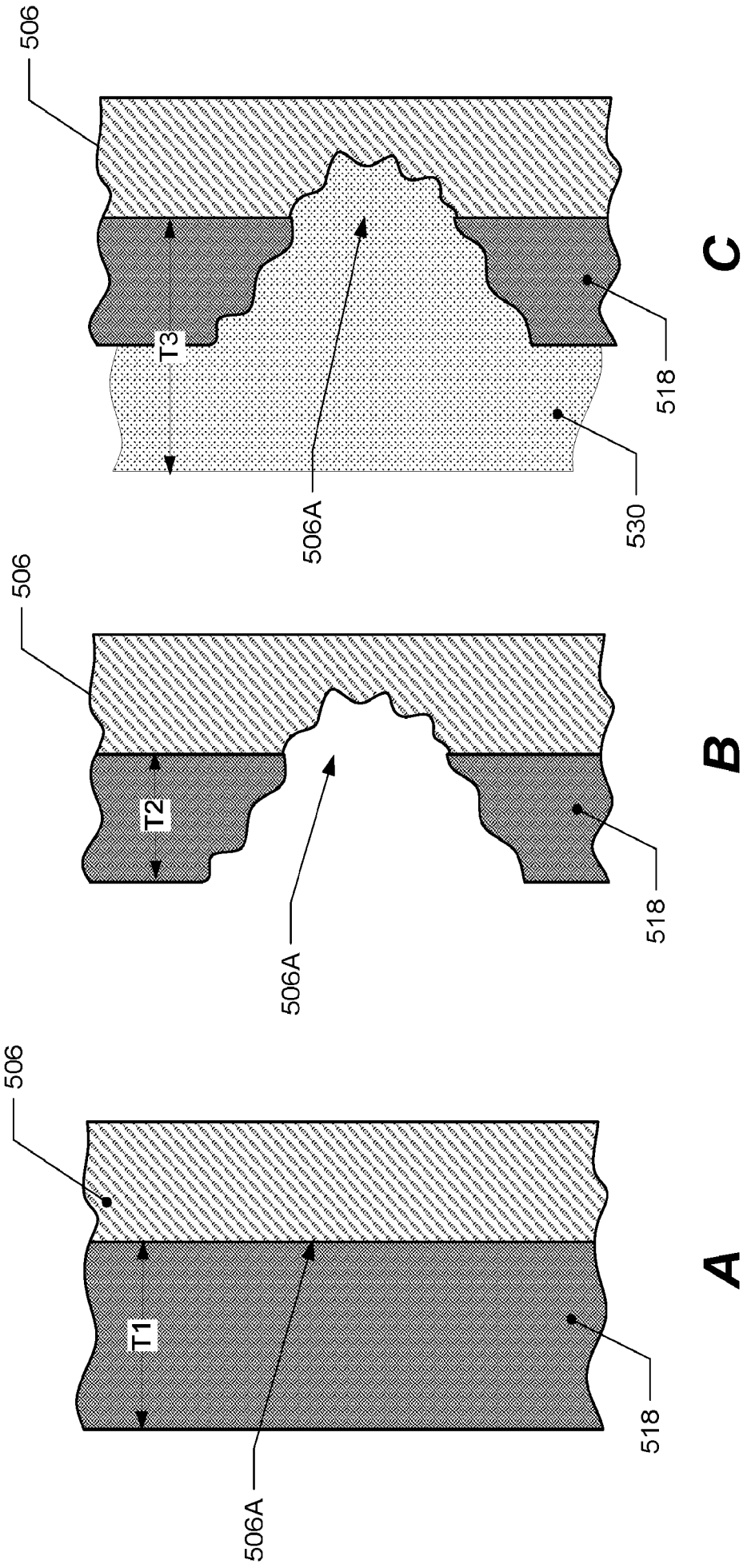

FIG. 5

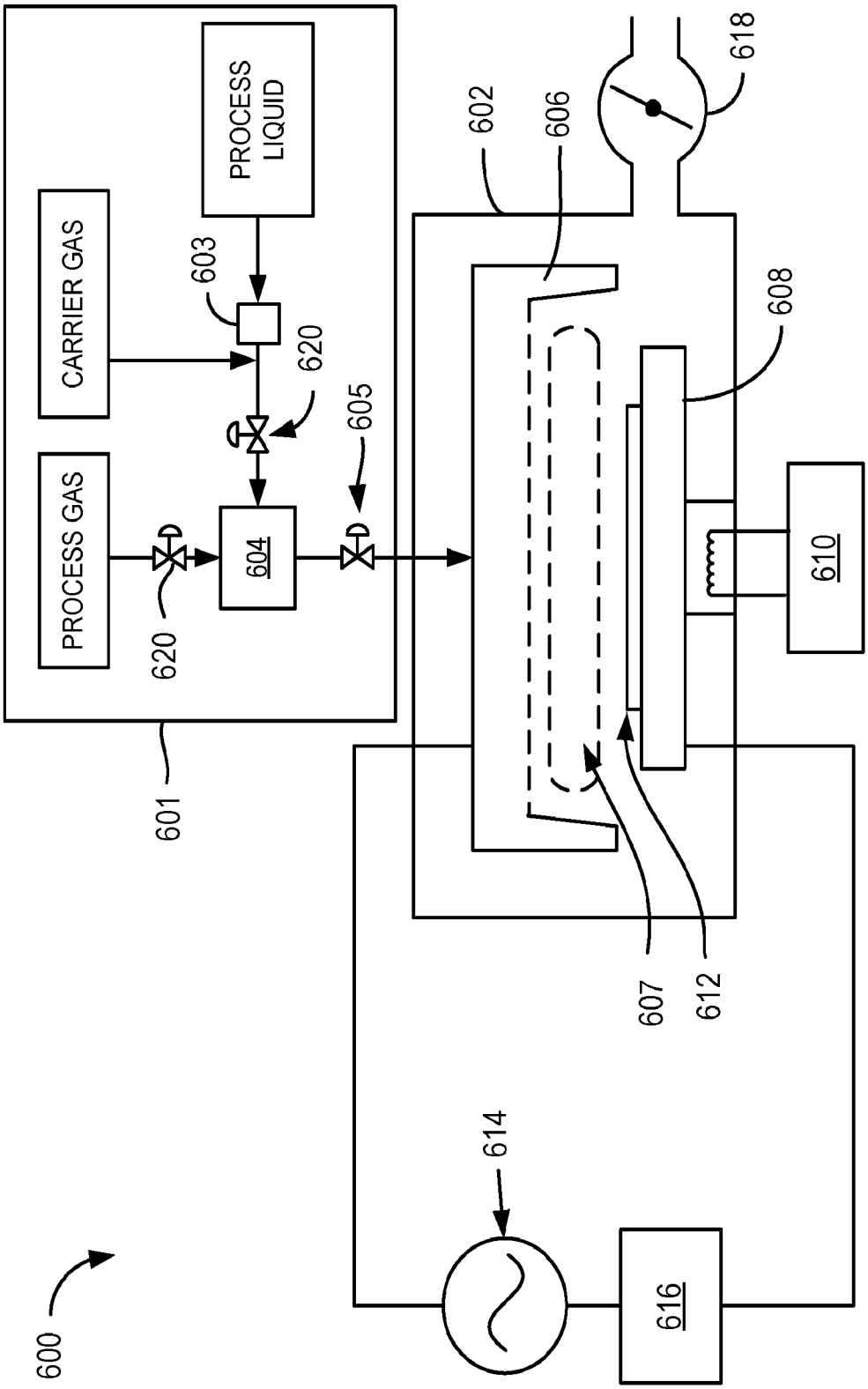
PROCESS LIQUID
CARRIER GAS
PROCESS GAS
603
620
605
620
604
601
602
606
618
608
610
607
612
614
616
600

FIG. 6

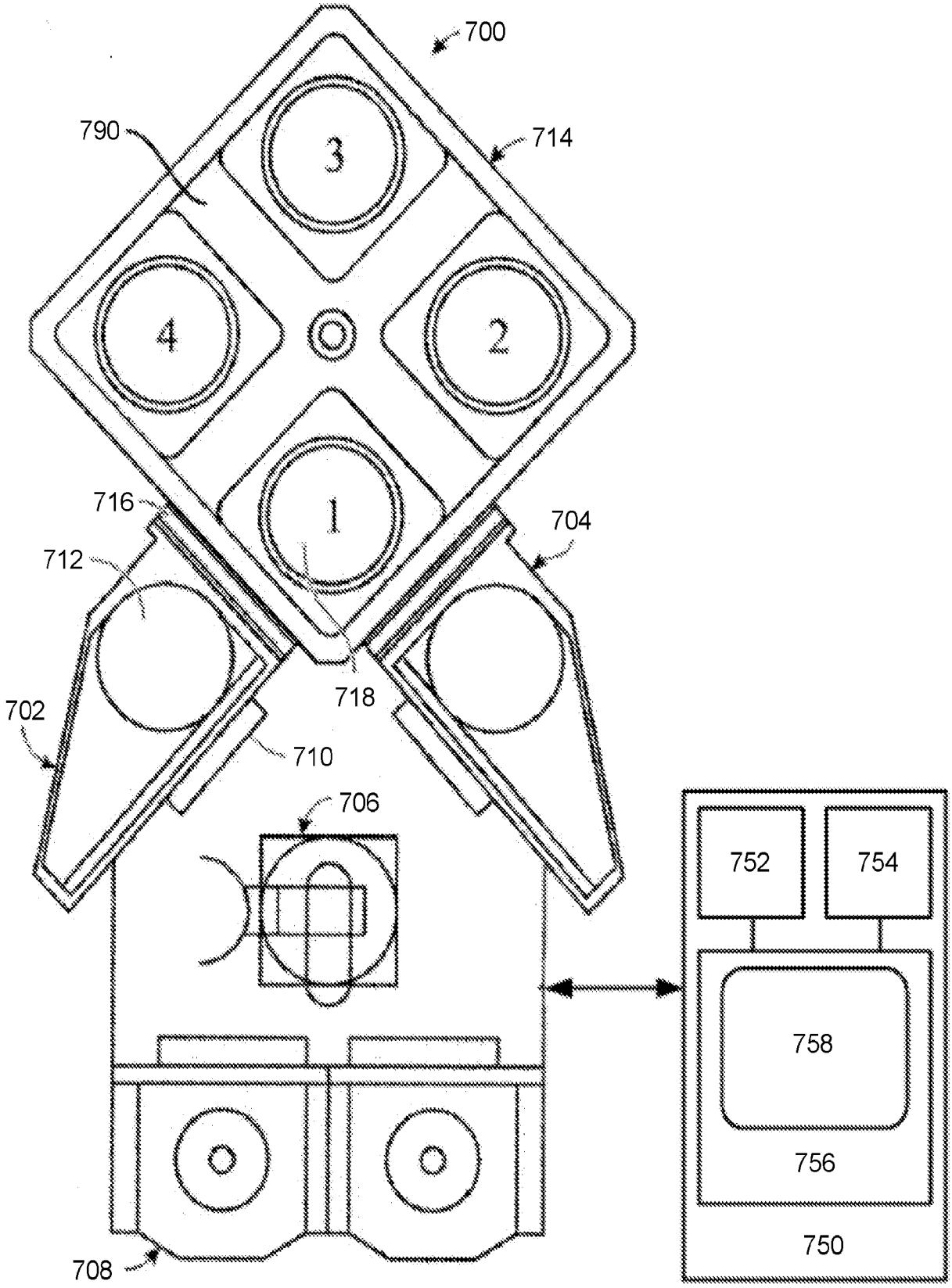
700
790
714
3
4
2
1
716
704
712
718
702
710
706
752
754
758
756
750
708

FIG. 7

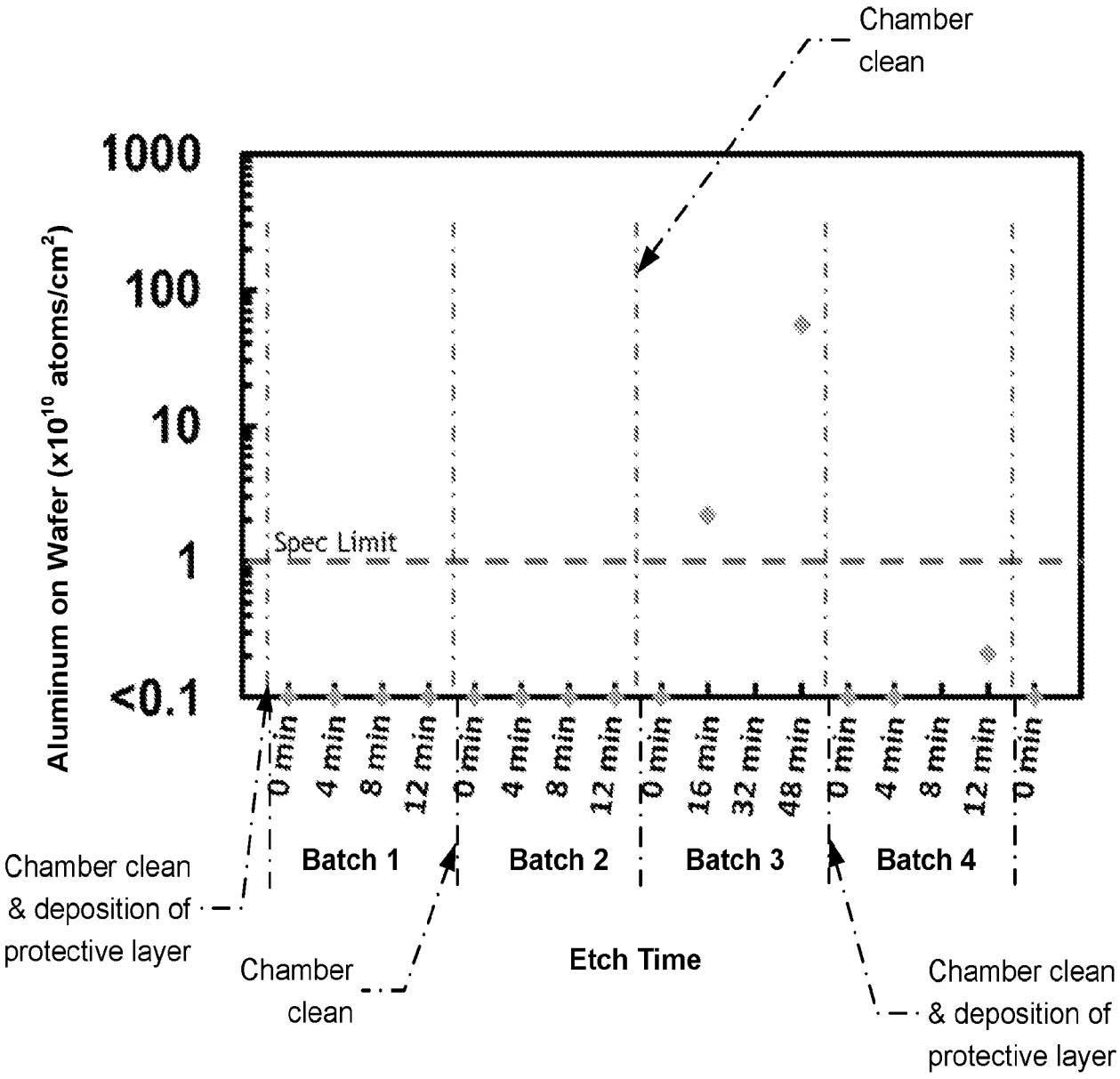
Chamber clean
1000
100
10
1
<0.1
Aluminum on Wafer (x10^10 atoms/cm^2)
Spec Limit
0 min
4 min
8 min
12 min
0 min
4 min
8 min
12 min
0 min
16 min
32 min
48 min
0 min
4 min
8 min
12 min
0 min
Batch 1
Batch 2
Batch 3
Batch 4
Chamber clean & deposition of protective layer
Chamber clean
Etch Time
Chamber clean & deposition of protective layer

FIG. 8

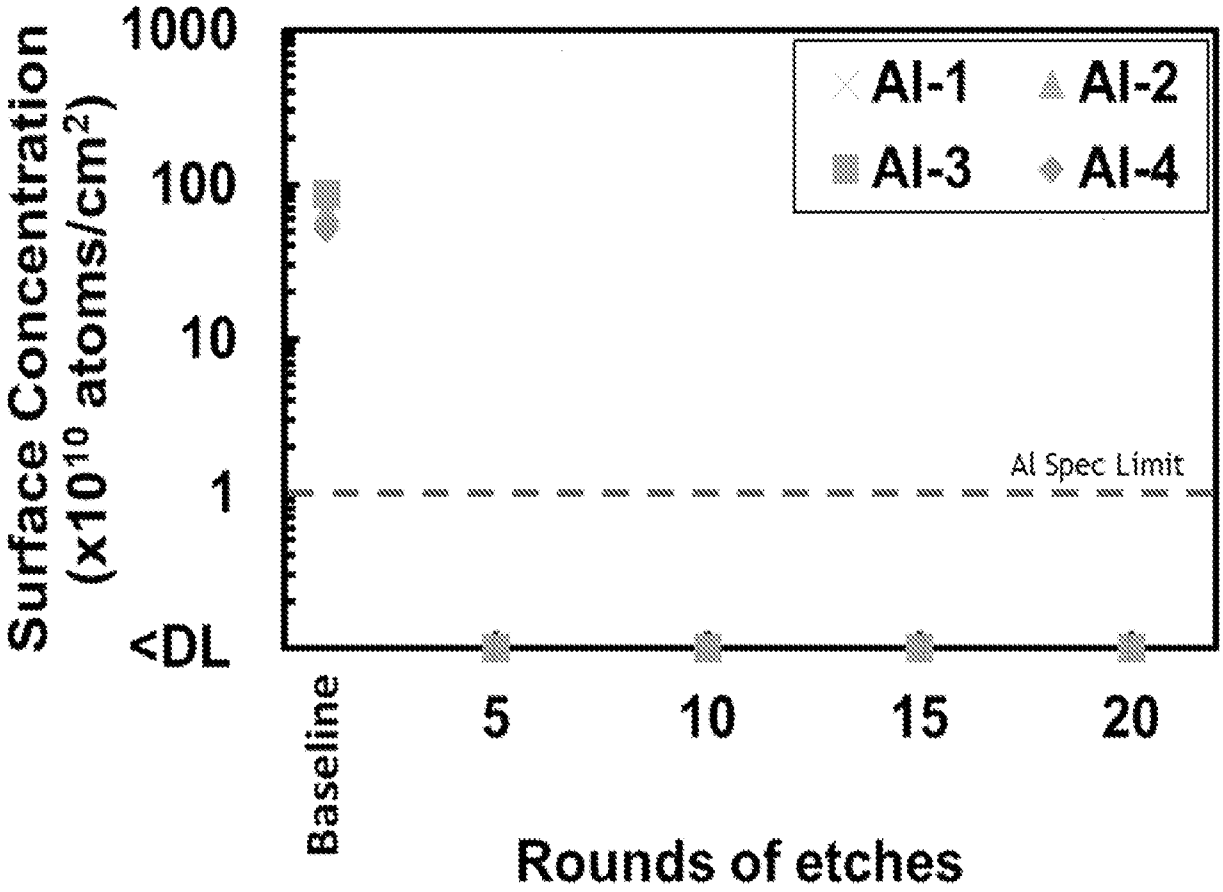
Surface Concentration (x10^10 atoms/cm^2)
1000
100
10
1
<DL
Al-1
Al-2
Al-3
Al-4
Al Spec Limit
Baseline
5
10
15
20
Rounds of etches

FIG. 9