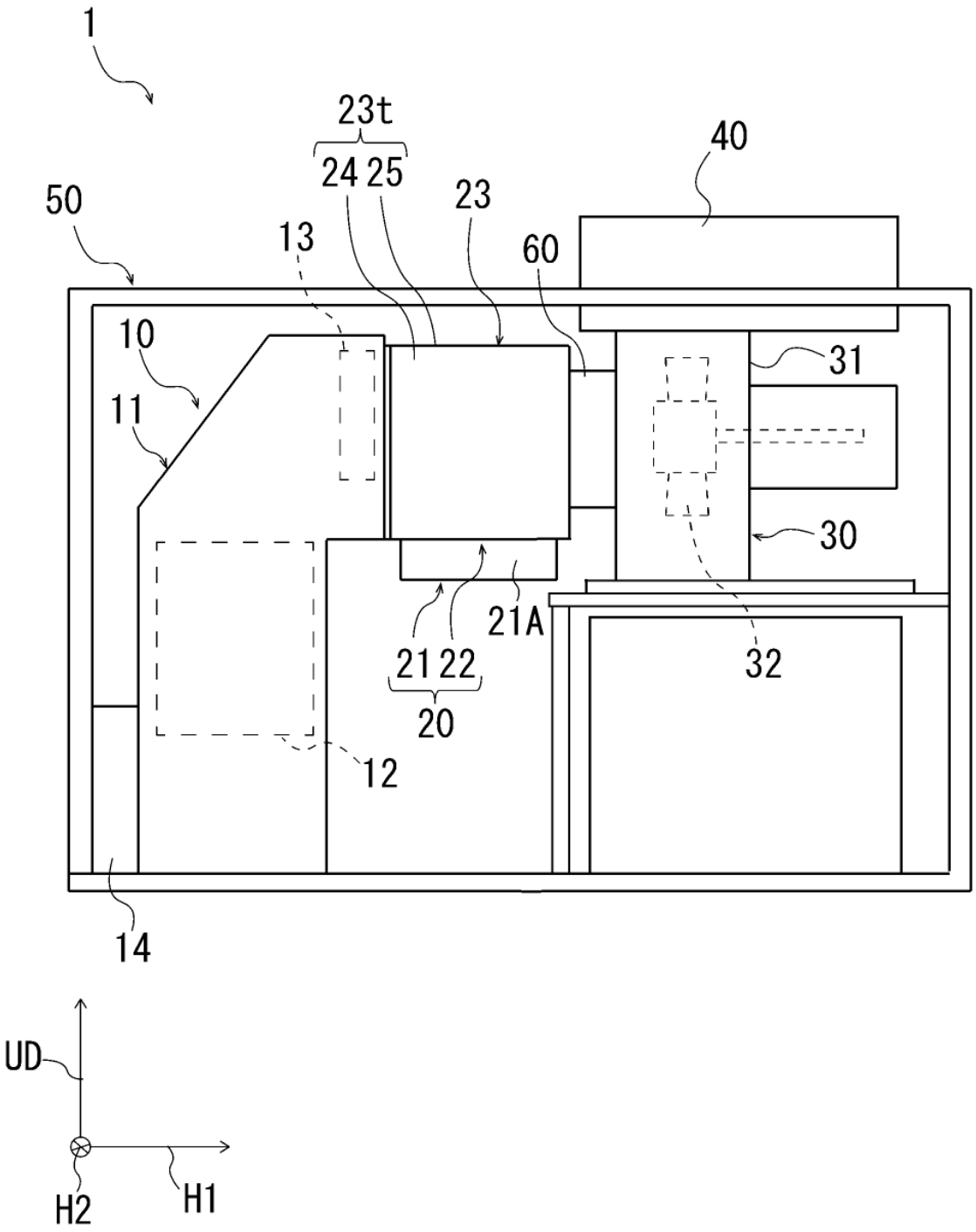


FIG.1

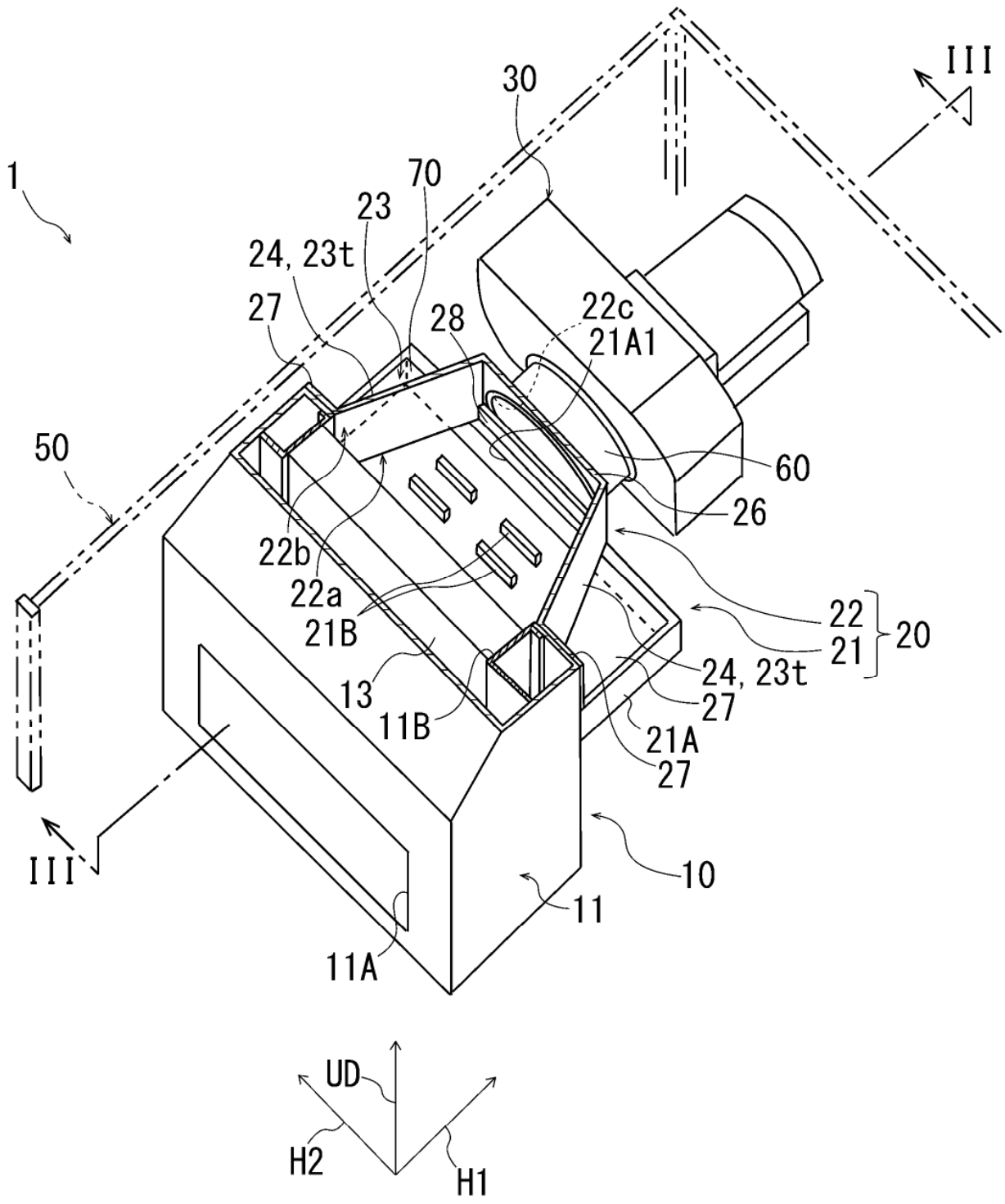
1
30
III
70
23
24, 23t
27
28
22c
21A1
50
60
26
22b
22a
21B
22
21
20
13
11B
24, 23t
27
21A
27
III
10
11
11A
UD
H2
H1

FIG.2

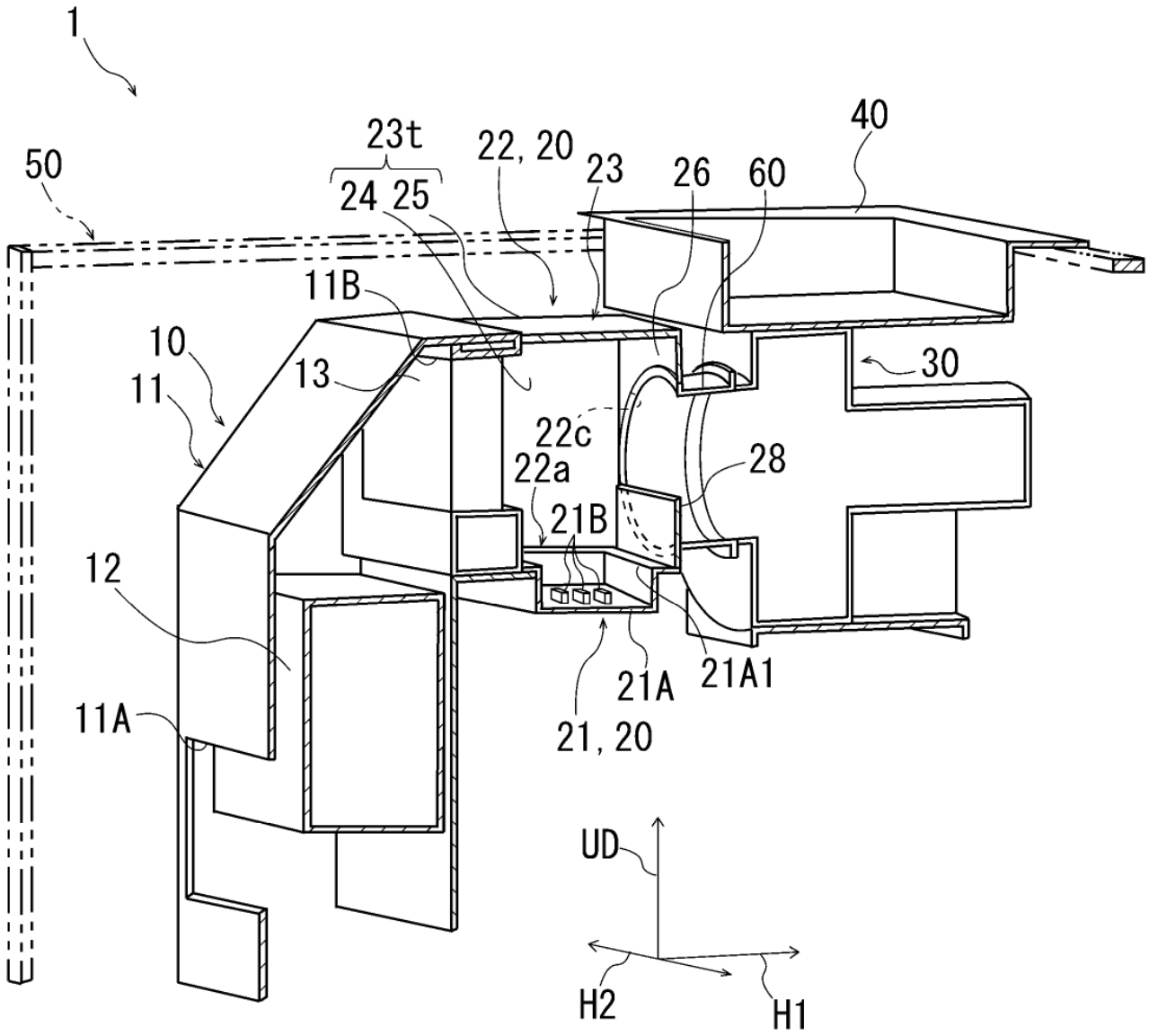
1
50
23t
24 25
22, 20
23
26
60
40
11B
10
11
13
30
22c
22a
28
21B
12
11A
21A
21A1
21, 20
UD
H2
H1

FIG.3

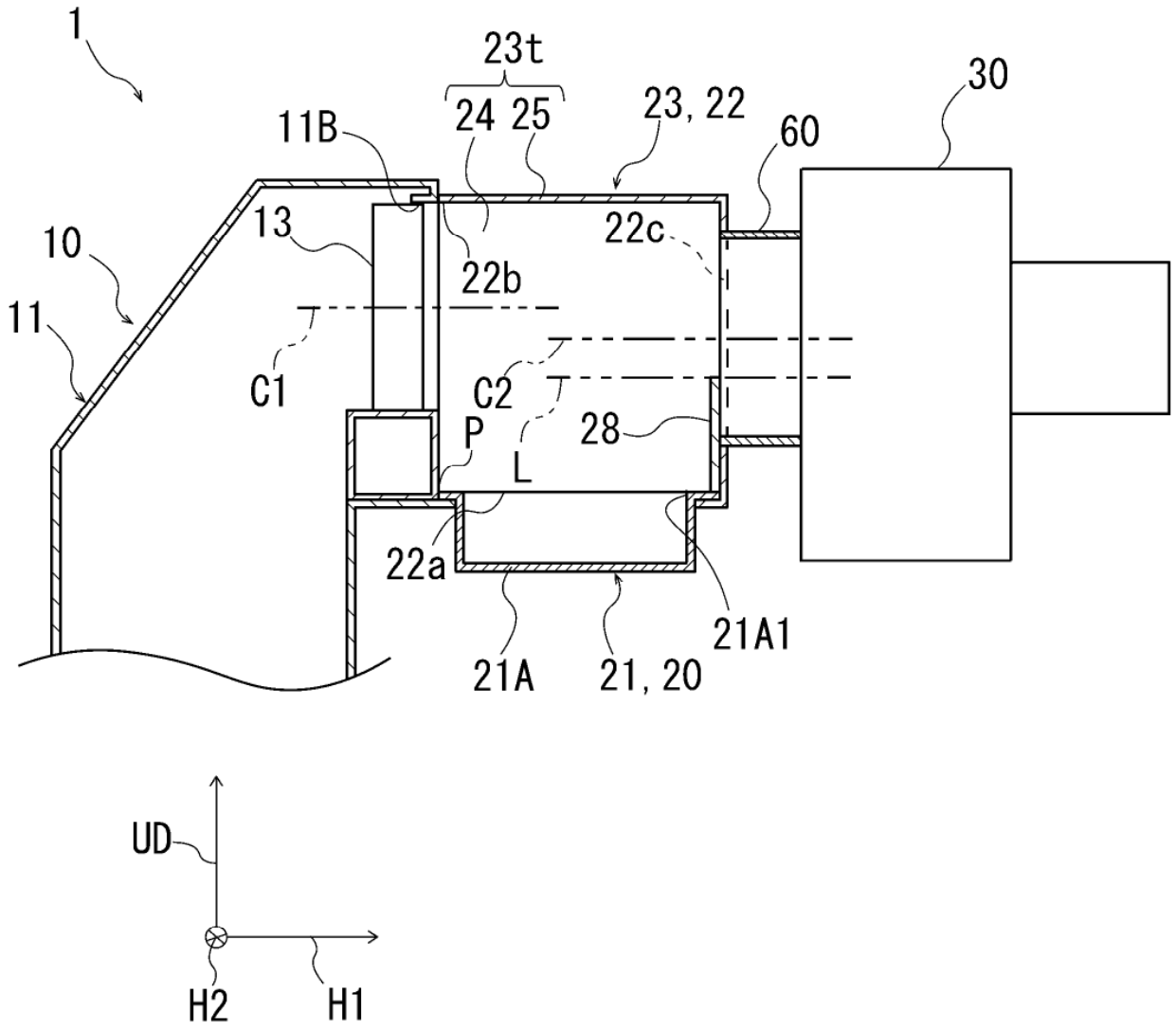
1
23t
24 25
23, 22
30
11B
60
13
22c
10
22b
11
C1
C2
28
P
L
22a
21A1
21A
21, 20
UD
H2
H1

FIG.4

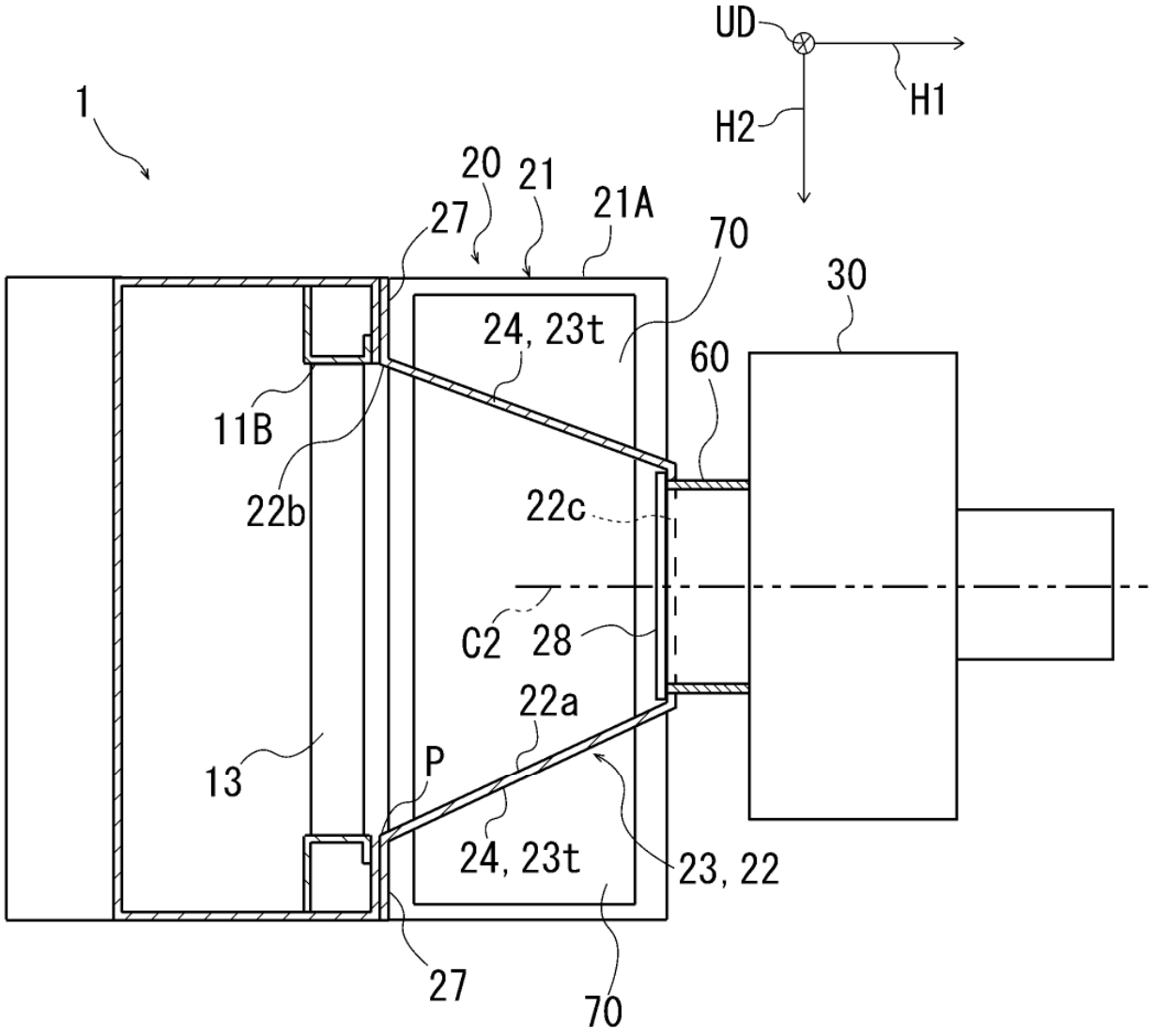
UD
H1
H2
1
20
21
21A
27
70
30
24, 23t
60
11B
22b
22c
C2
28
22a
13
P
24, 23t
23, 22
27
70

FIG.5

(A)

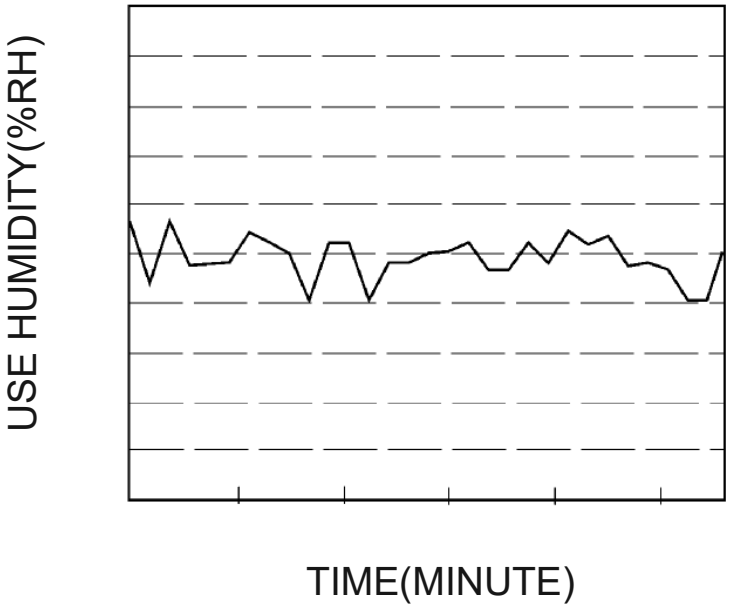


(B)

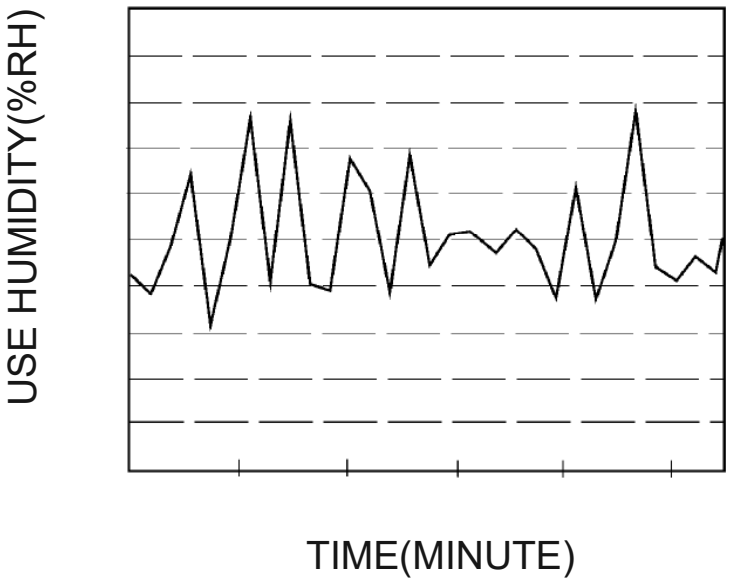


FIG.6

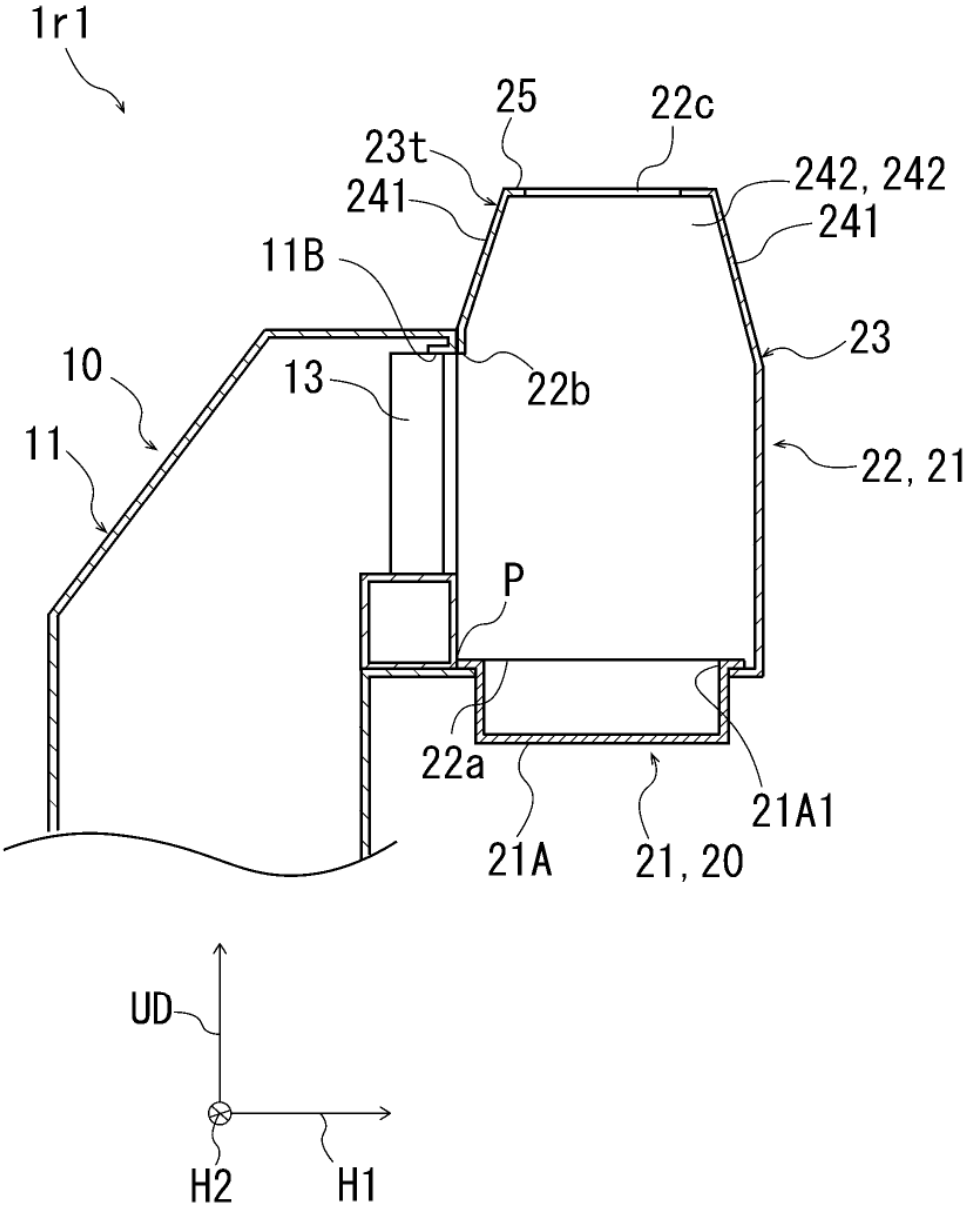
1r1
25
22c
23t
241
242, 242
241
11B
23
10
13
22b
11
22, 21
P
22a
21A1
21A
21, 20
UD
H2
H1

FIG.7

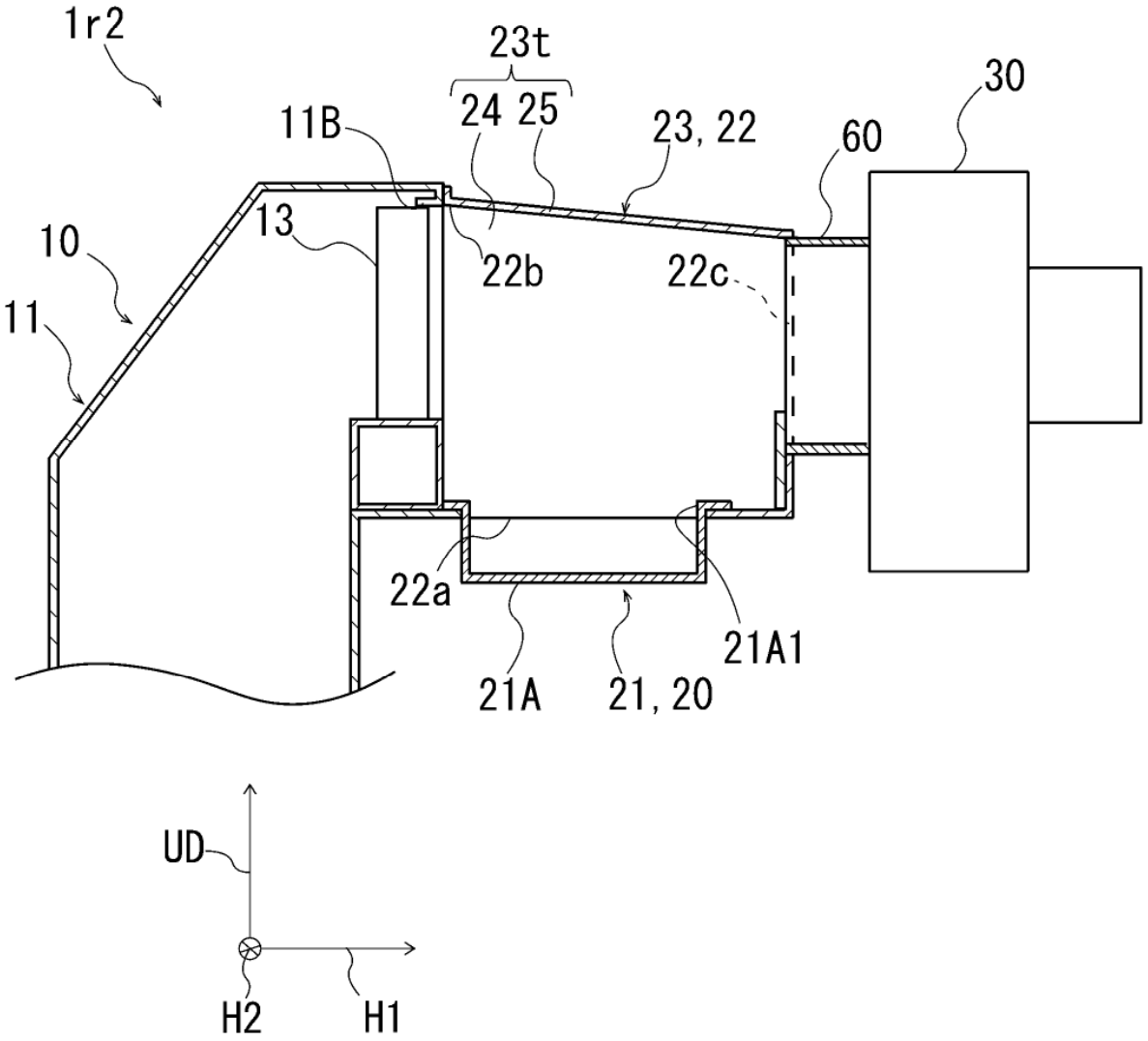
1r2
23t
24 25
30
11B
23, 22
60
13
10
22b
22c
11
22a
21A1
21A
21, 20
UD
H2
H1

FIG.8

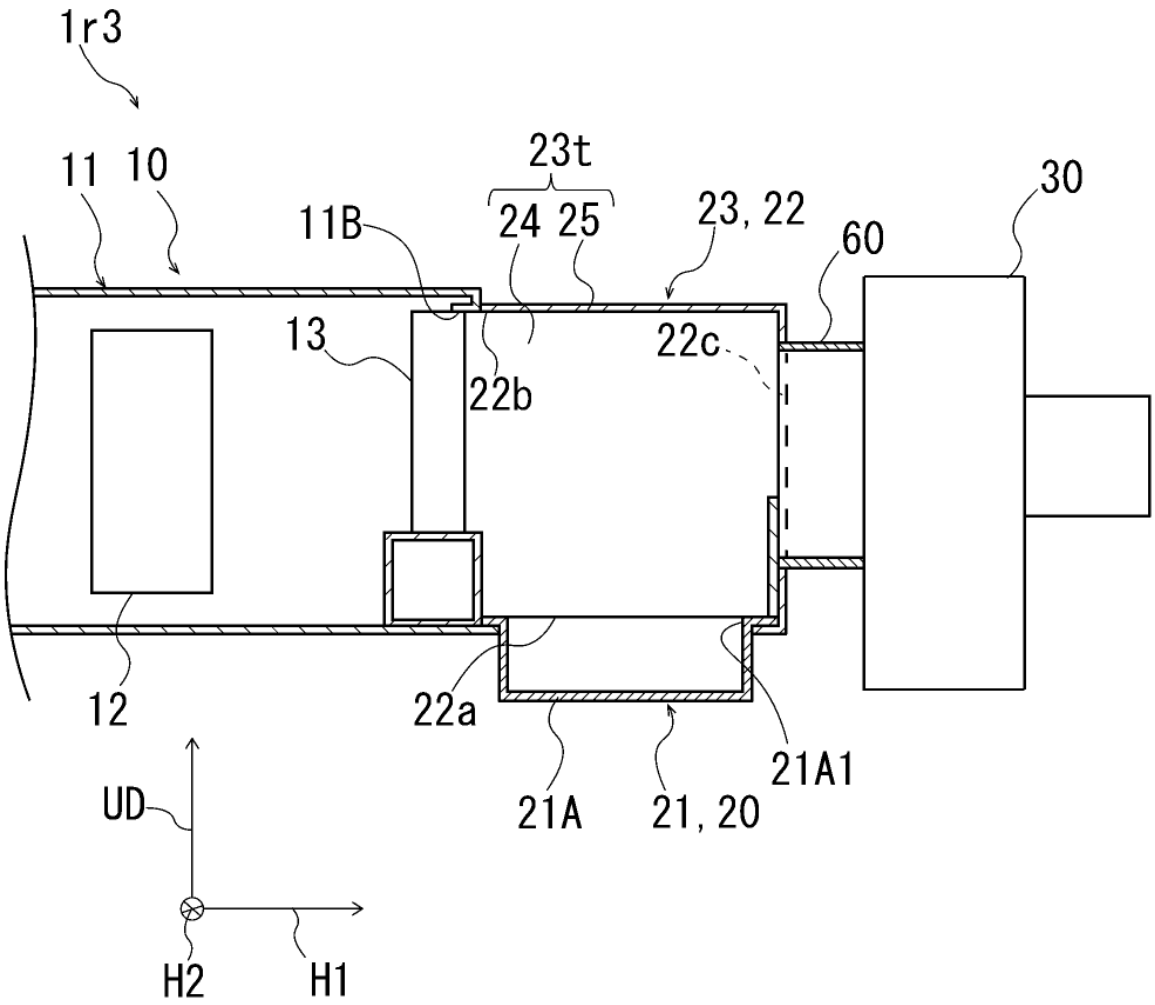
1r3
11
10
23t
24
25
23, 22
60
30
11B
13
22b
22c
12
22a
21A
21, 20
21A1
UD
H2
H1

FIG.9

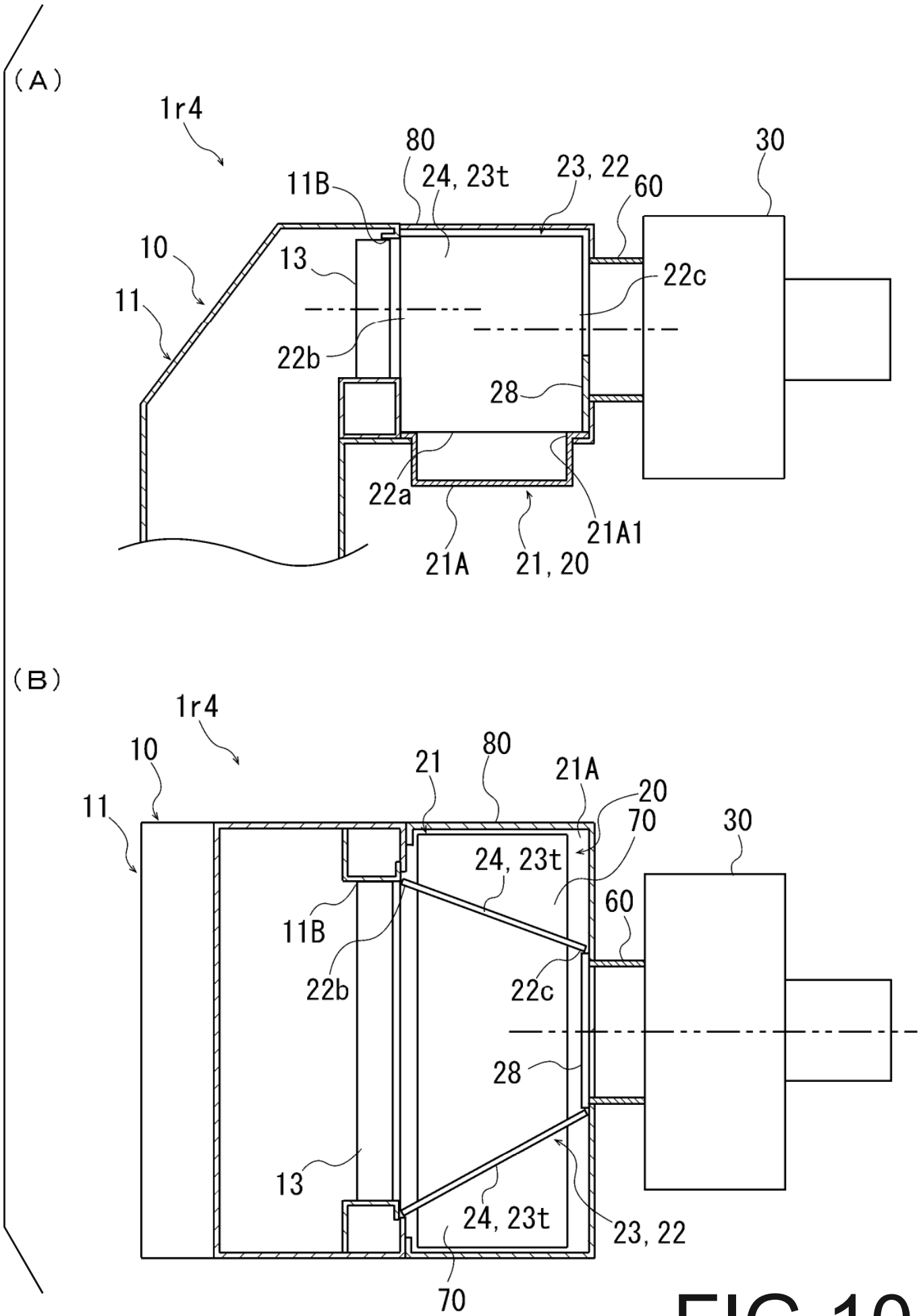
(A)
1r4
80
24, 23t
23, 22
60
30
11B
10
13
22c
11
22b
28
22a
21A1
21A
21, 20
(B)
1r4
10
21
80
21A
20
11
70
30
24, 23t
60
11B
22b
22c
28
13
24, 23t
23, 22
70

FIG.10

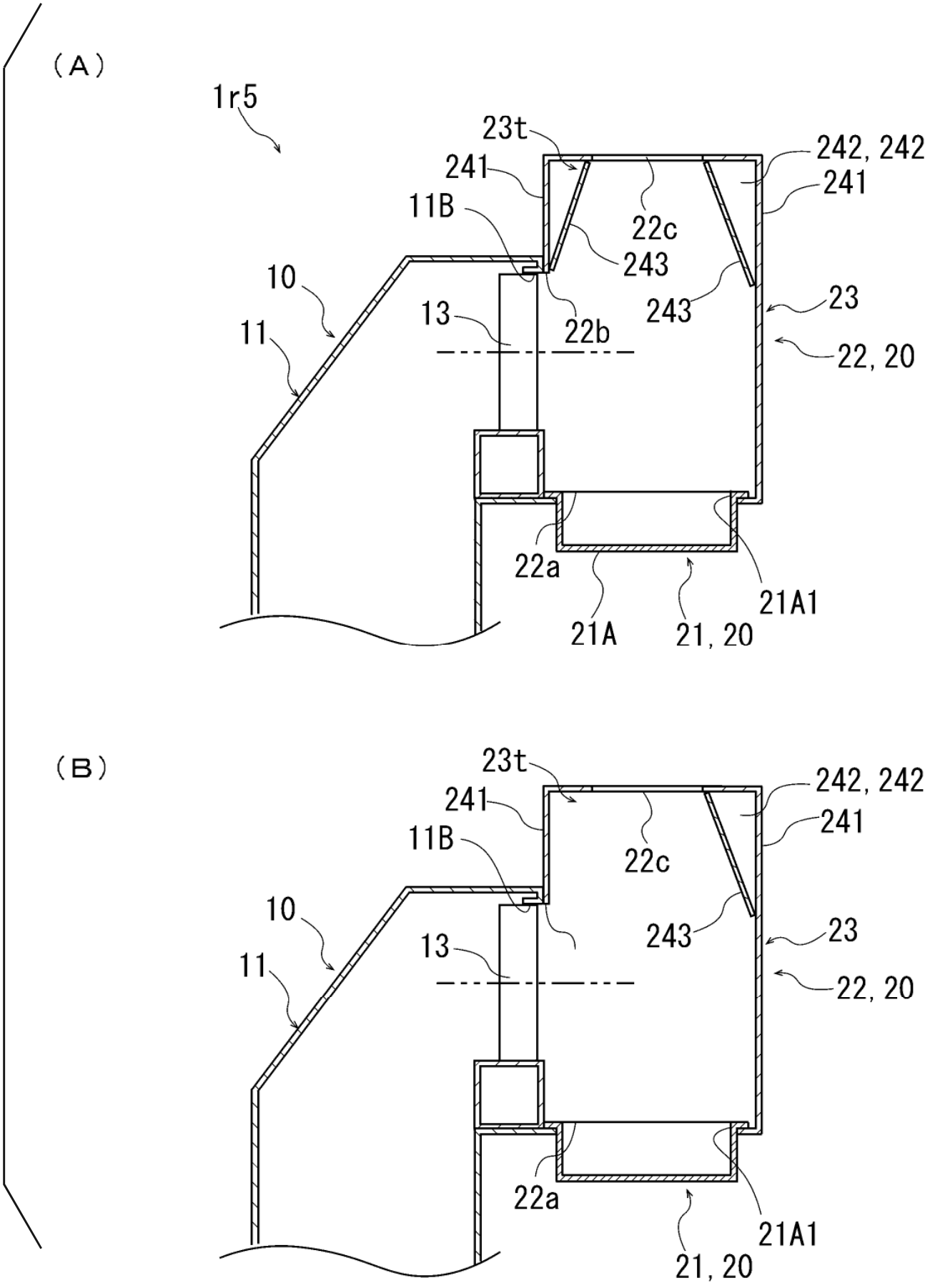
(A)
1r5
23t
241
11B
242, 242
241
22c
243
10
243
23
13
22b
11
22, 20
22a
21A1
21A
21, 20
(B)
23t
241
242, 242
241
11B
22c
10
243
23
13
11
22, 20
22a
21A1
21, 20

FIG.11

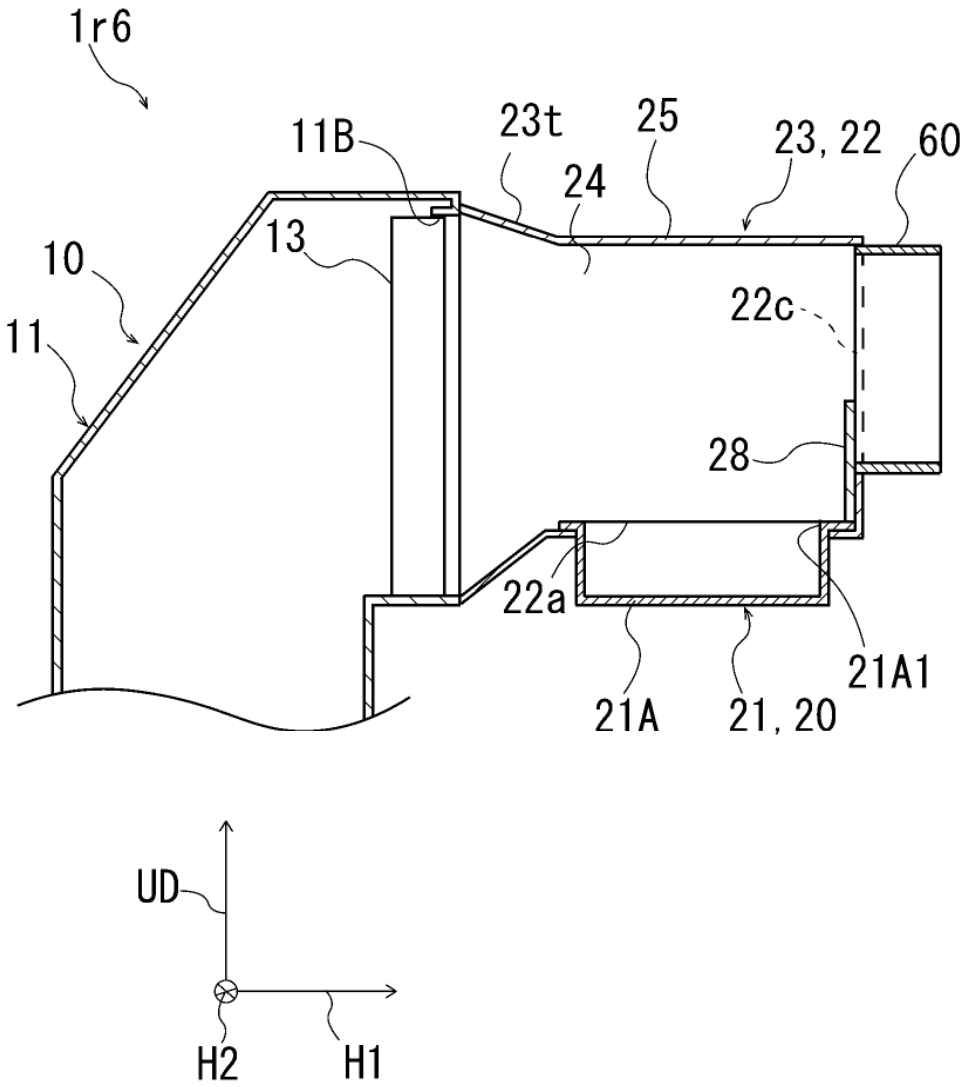
1r6
11B
23t
25
23, 22
60
24
13
10
11
22c
28
22a
21A1
21A
21, 20
UD
H2
H1

FIG.12