Sub-Irrigated Grow System For Corridors / Balconies

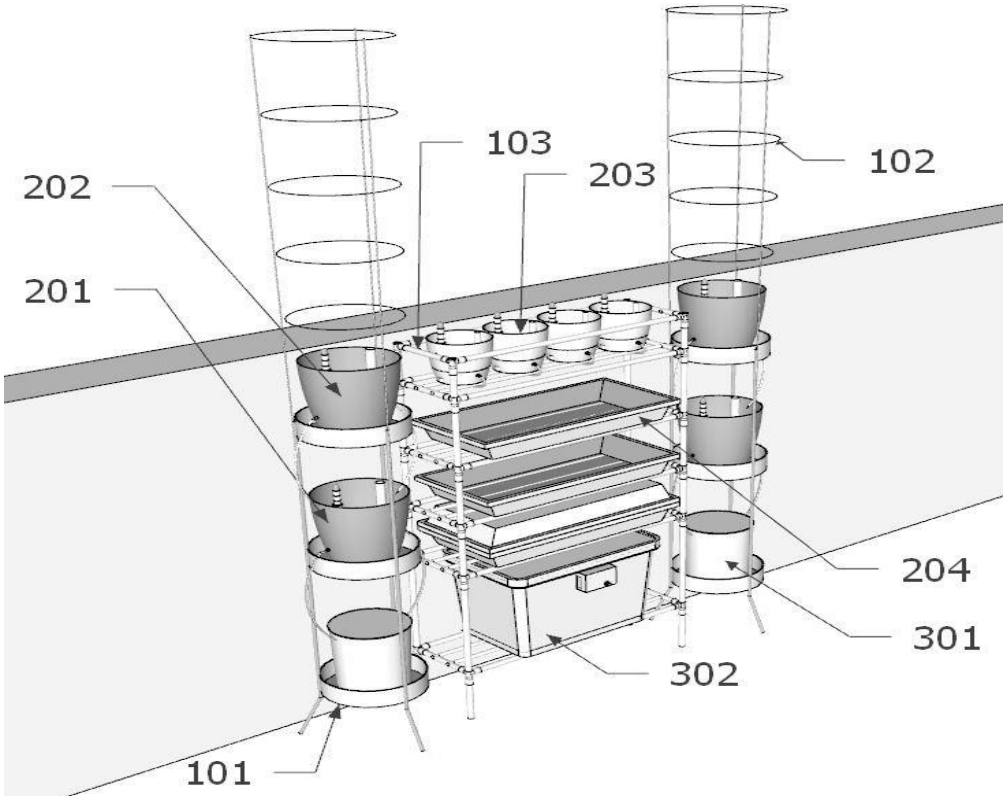

Figure 1

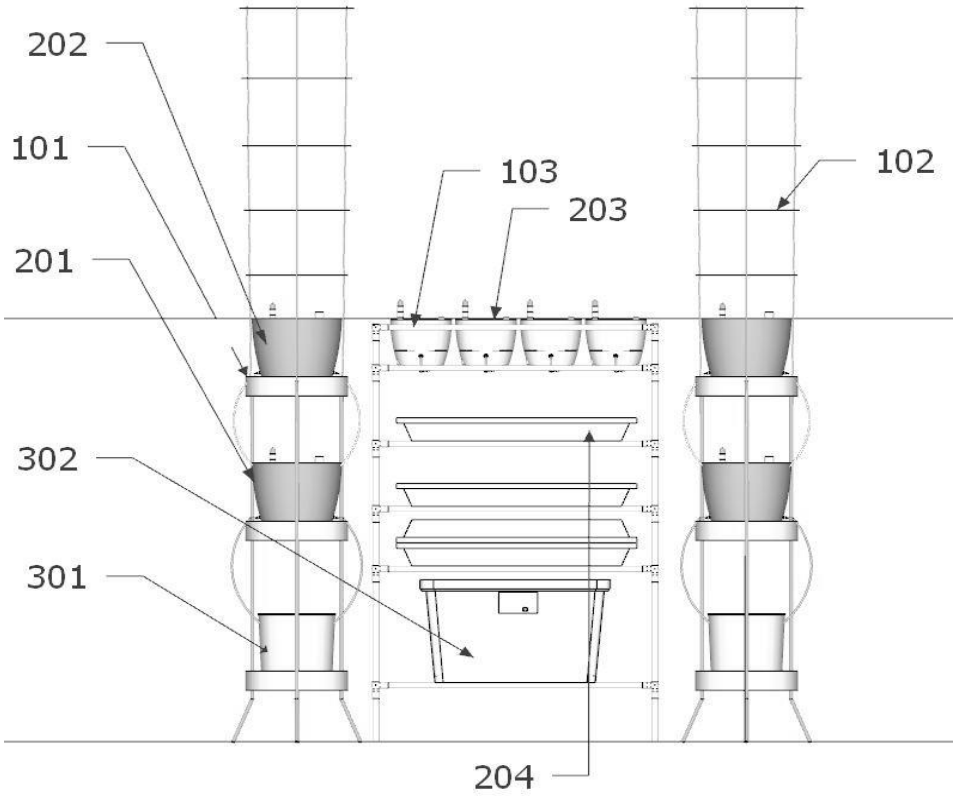

Figure 2

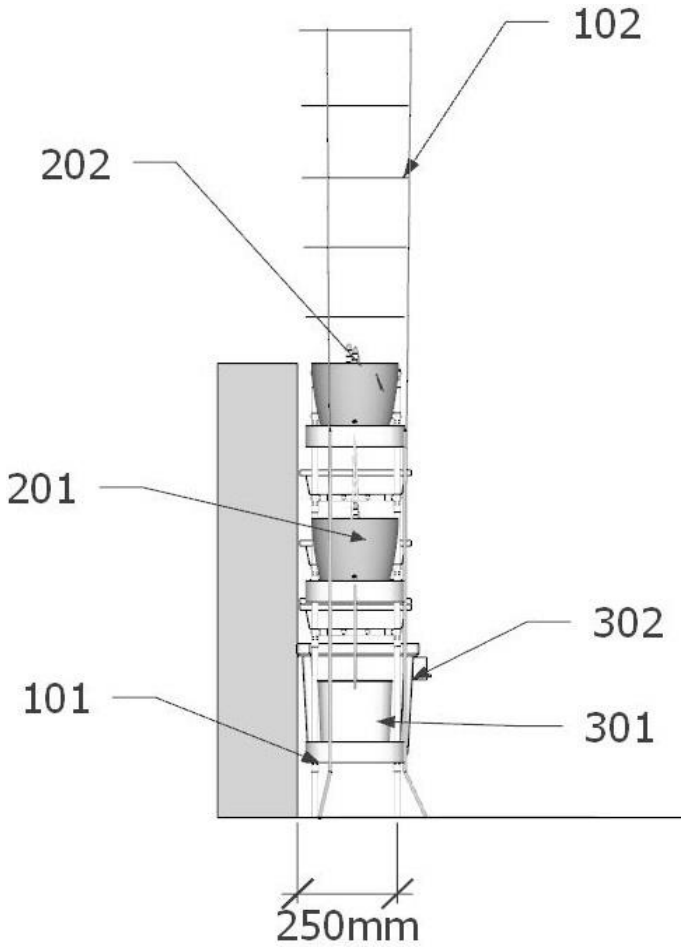

Figure 3

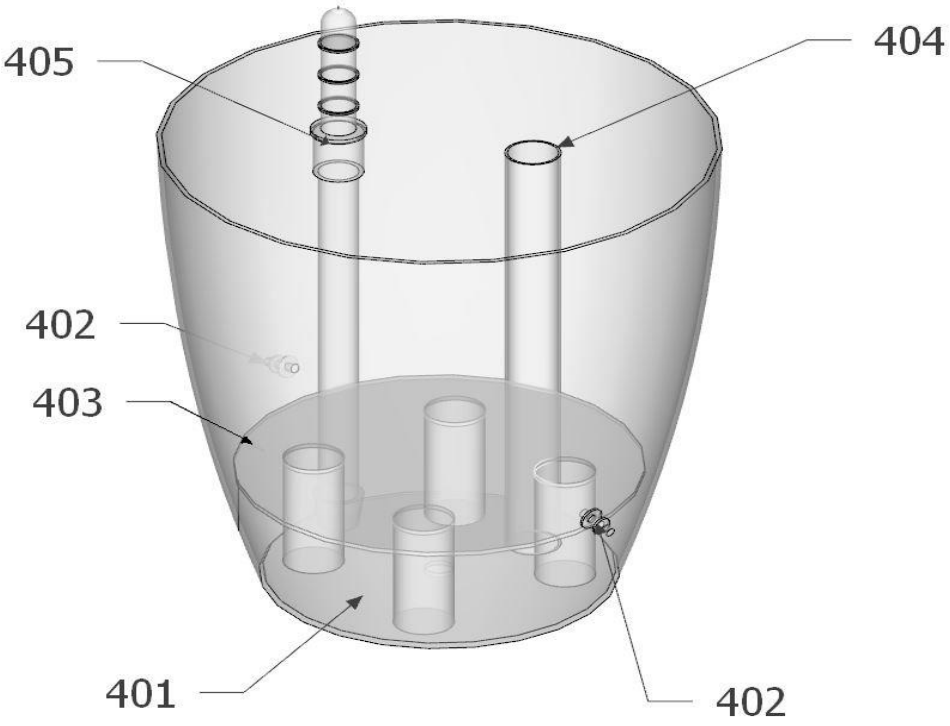

Figure 4