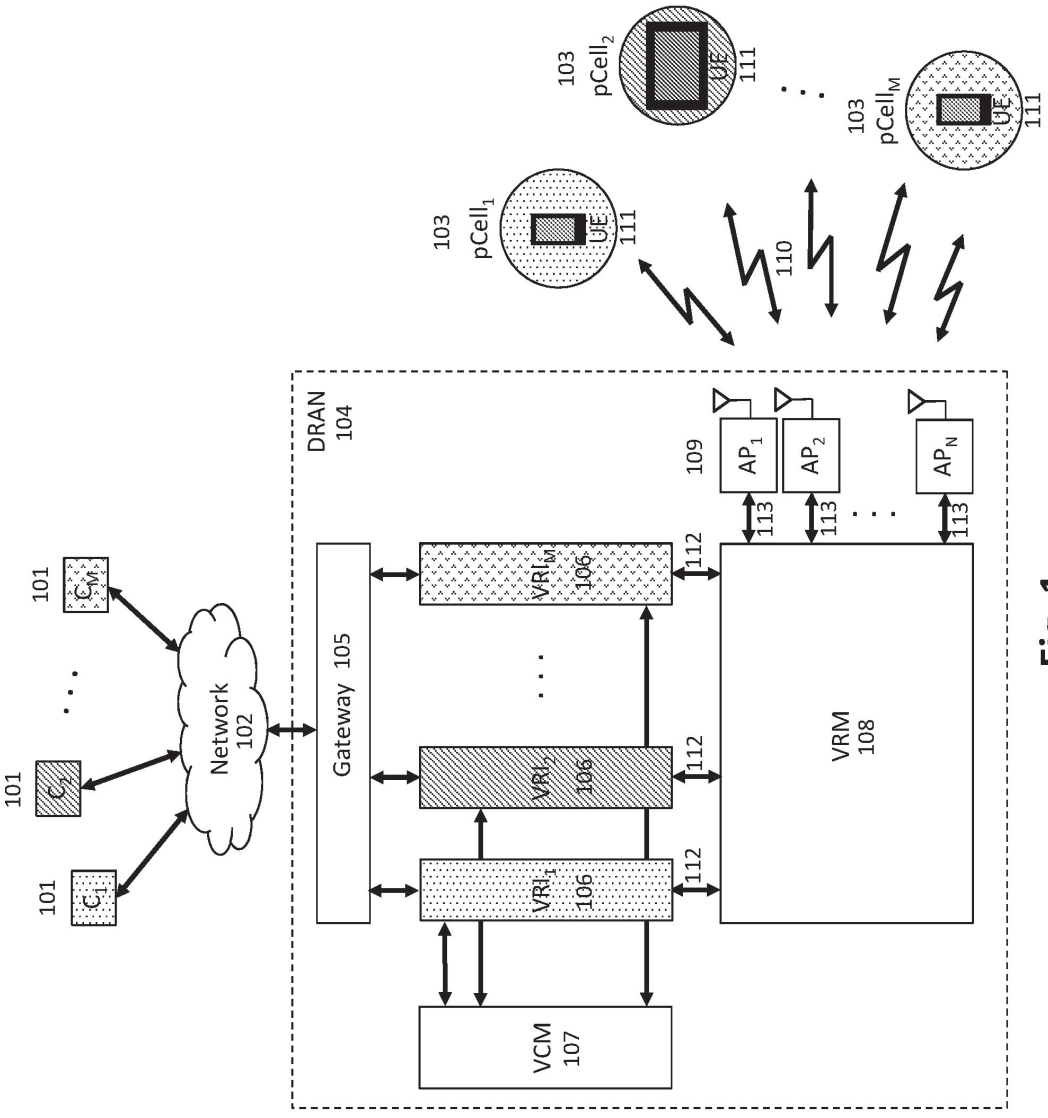
101
C_M
101
C_2
101
C_1
Network
102
Gateway 105
DRAN
104
VRI_M
106
VRI_2
106
VRI_1
106
112
112
112
VCM
107
VRM
108
109
AP_1
AP_2
AP_N
113
113
113
103
$pCell_1$
UE
111
103
$pCell_2$
UE
111
103
$pCell_M$
UE
111
110

Fig. 1

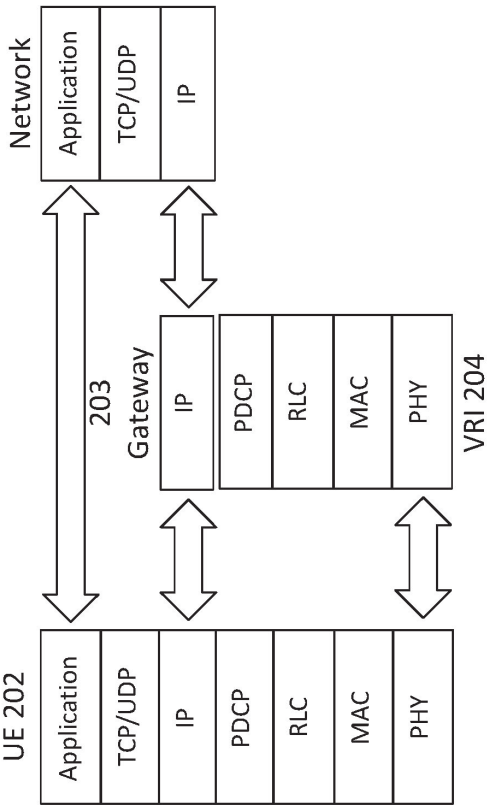
205
Network
Application
TCP/UDP
IP
203
Gateway
IP
PDCP
RLC
MAC
PHY
VRI 204
UE 202
Application
TCP/UDP
IP
PDCP
RLC
MAC
PHY

Fig. 2b

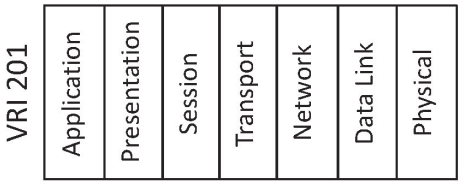
VRI 201
Application
Presentation
Session
Transport
Network
Data Link
Physical

Fig. 2a

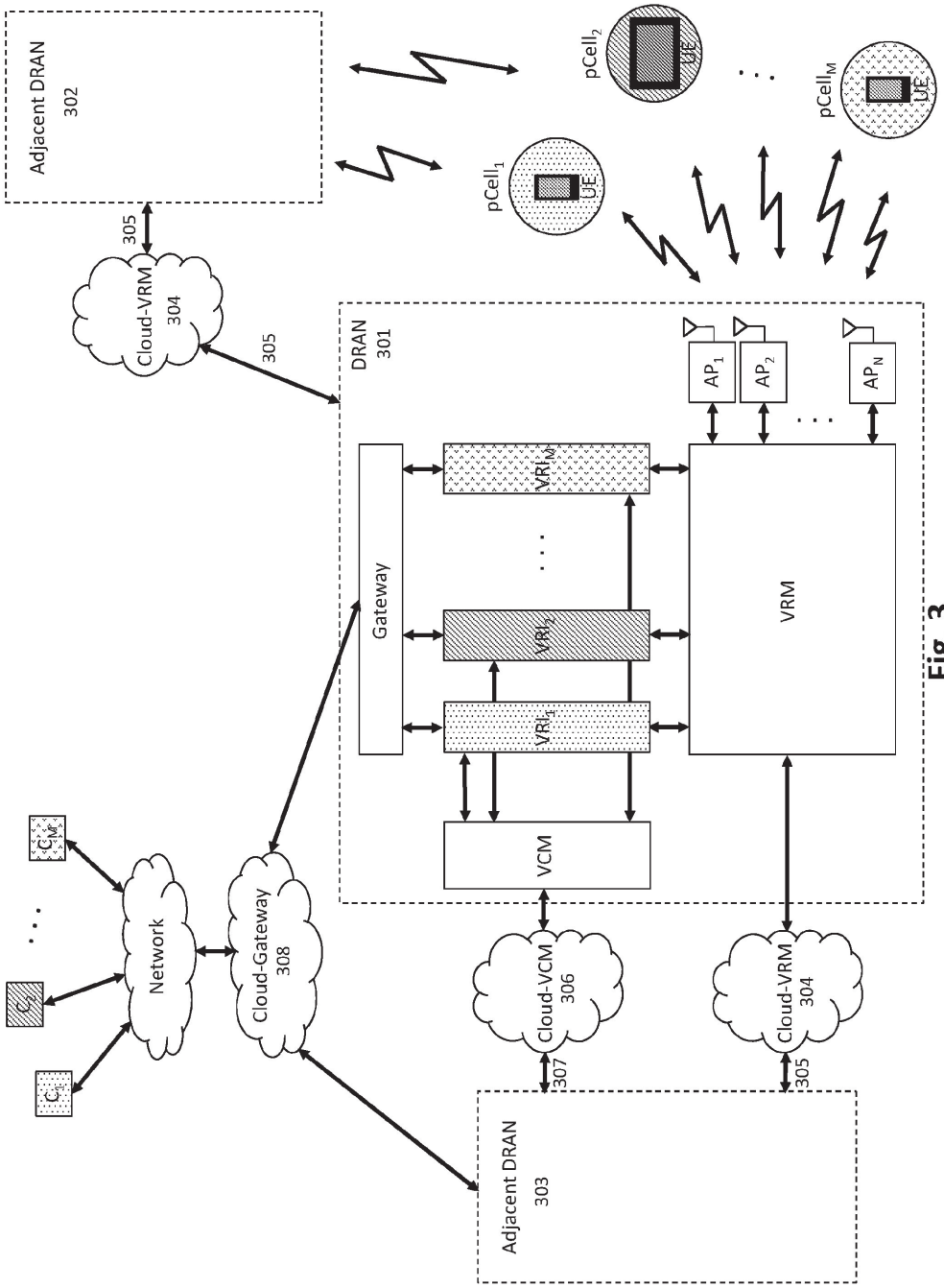
Adjacent DRAN
302
305
Cloud-VRM
304
305
DRAN
301
pCell1
UE
pCell2
UE
pCellM
UE
AP1
AP2
APN
Gateway
VRIM
VRI2
VRI1
VRM
VCM
Network
Cloud-Gateway
308
Cloud-VCM
306
Cloud-VRM
304
307
305
Adjacent DRAN
303

Fig. 3

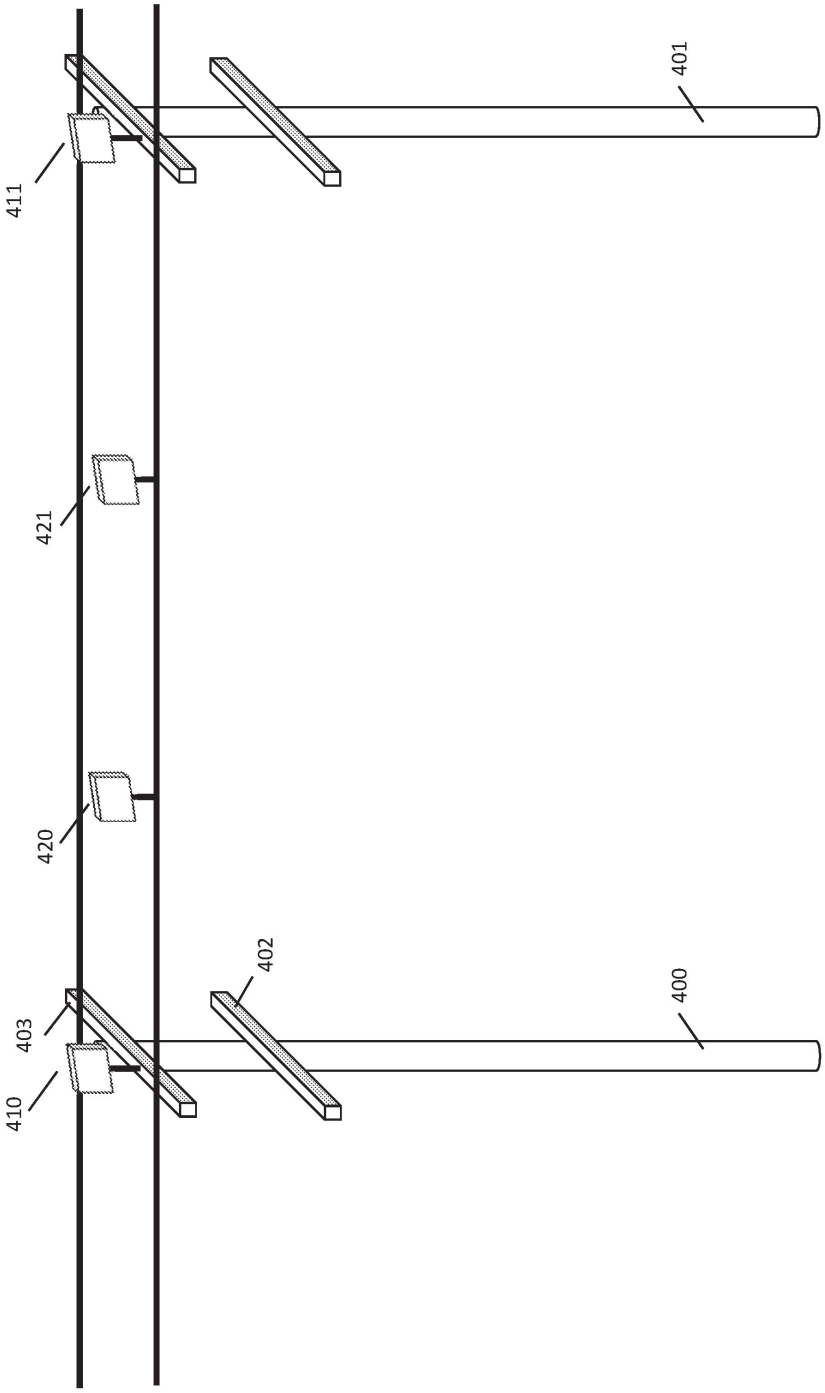

Fig. 4
(Prior Art)

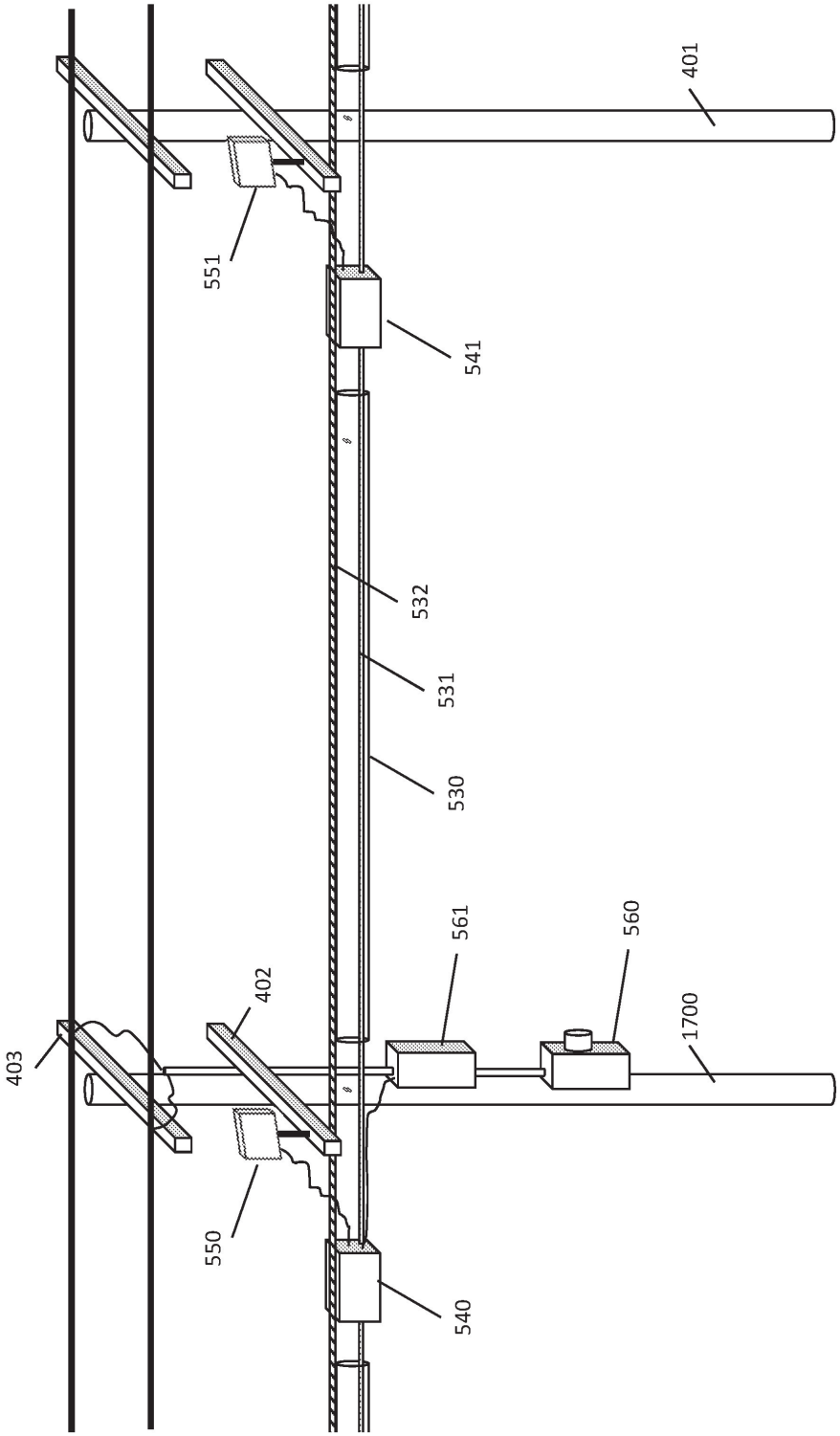

Fig. 5
(Prior Art)

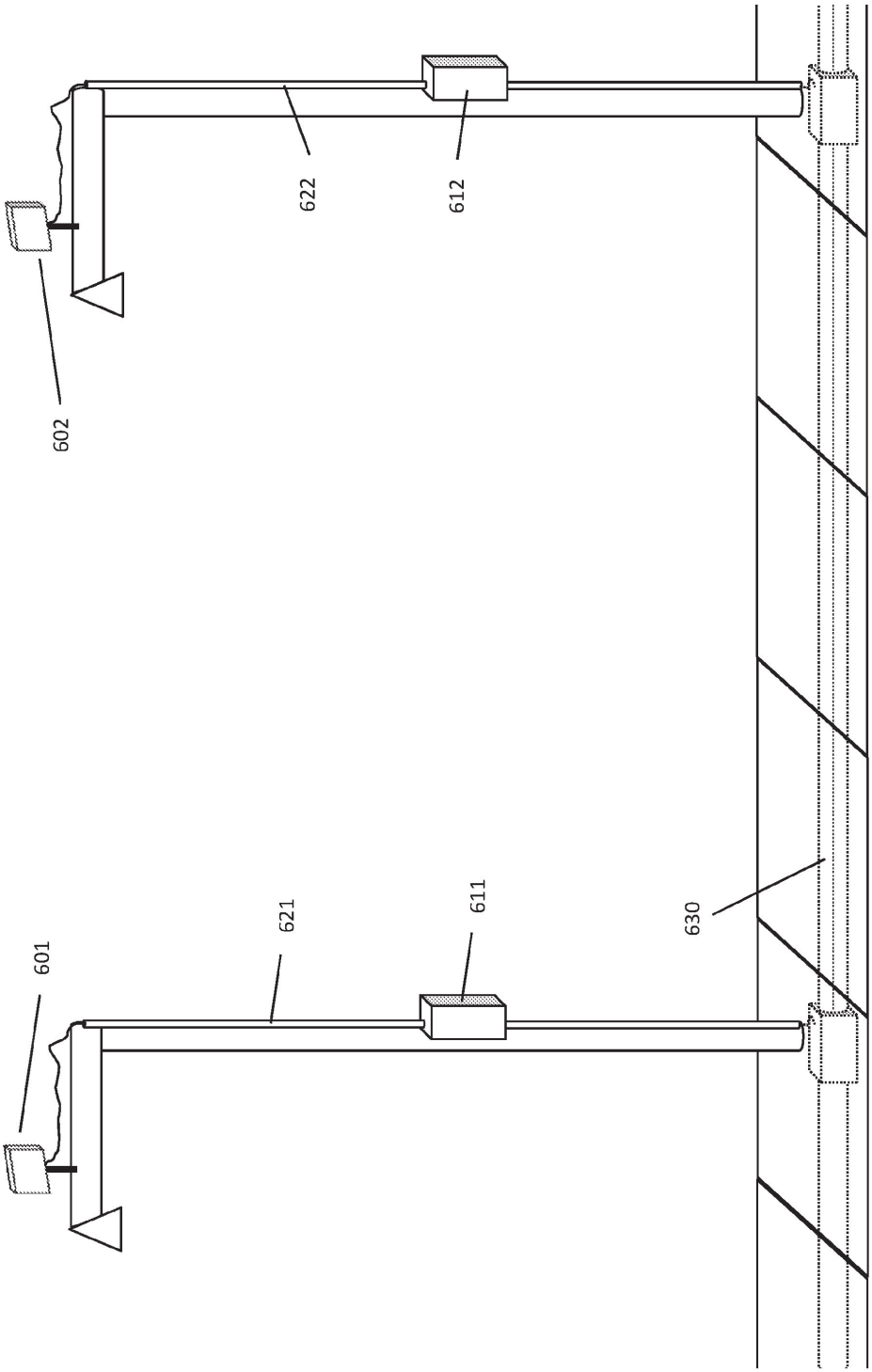

Fig. 6
(Prior Art)

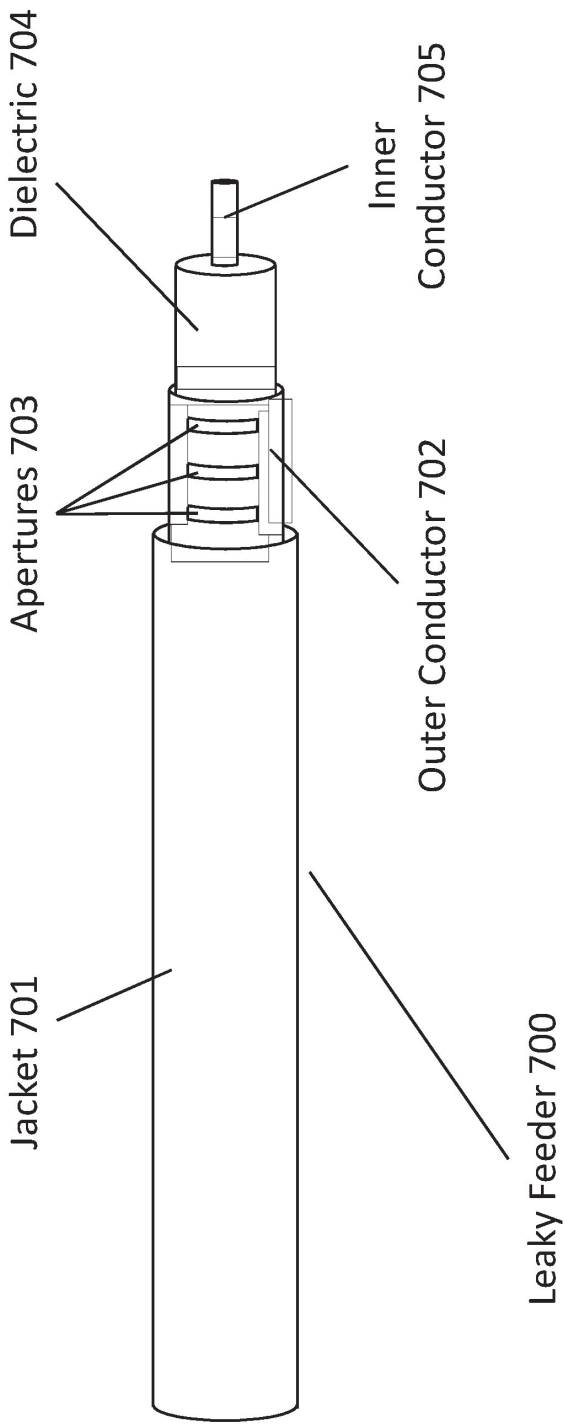

Fig. 7
(Prior Art)

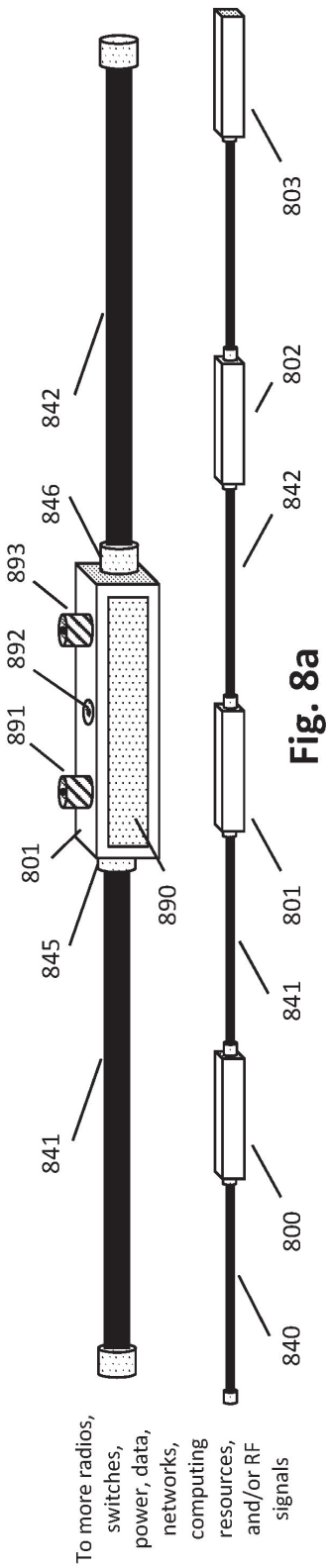
To more radios, switches, power, data, networks, computing resources, and/or RF signals
840
800
841
801
845
890
891
892
893
846
842
802
803

Fig. 8a

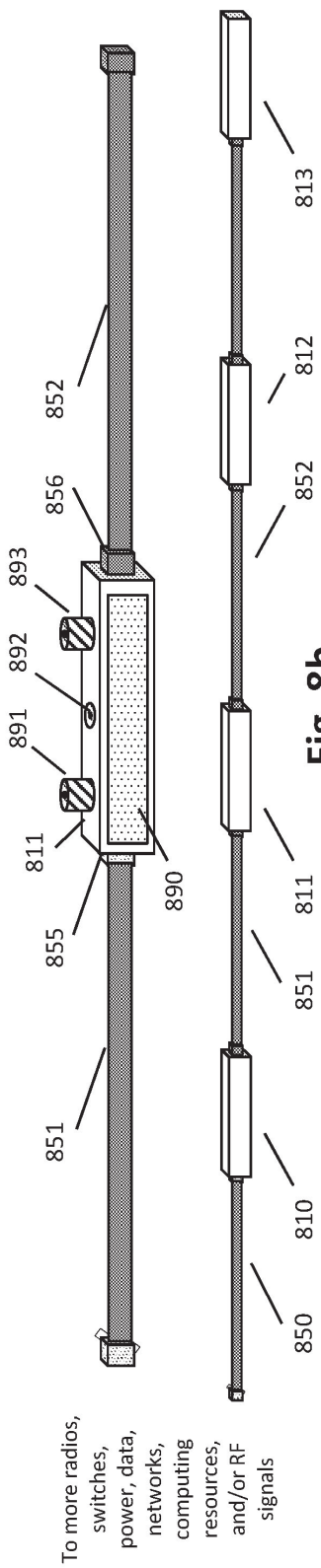
To more radios, switches, power, data, networks, computing resources, and/or RF signals
850
810
851
811
855
890
891
892
893
856
852
812
813

Fig. 8b

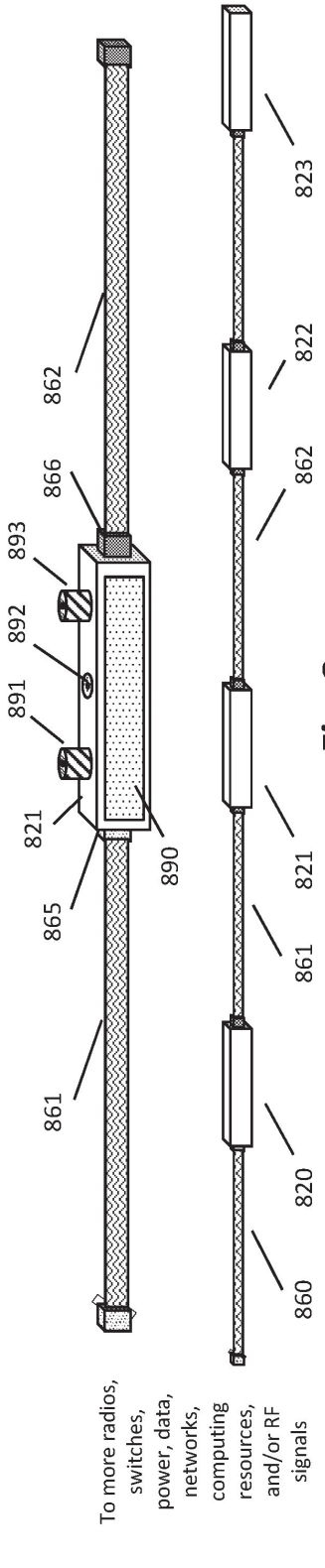
862
866
893
892
891
821
865
890
861
To more radios, switches, power, data, networks, computing resources, and/or RF signals
823
822
862
821
861
820
860

Fig. 8c

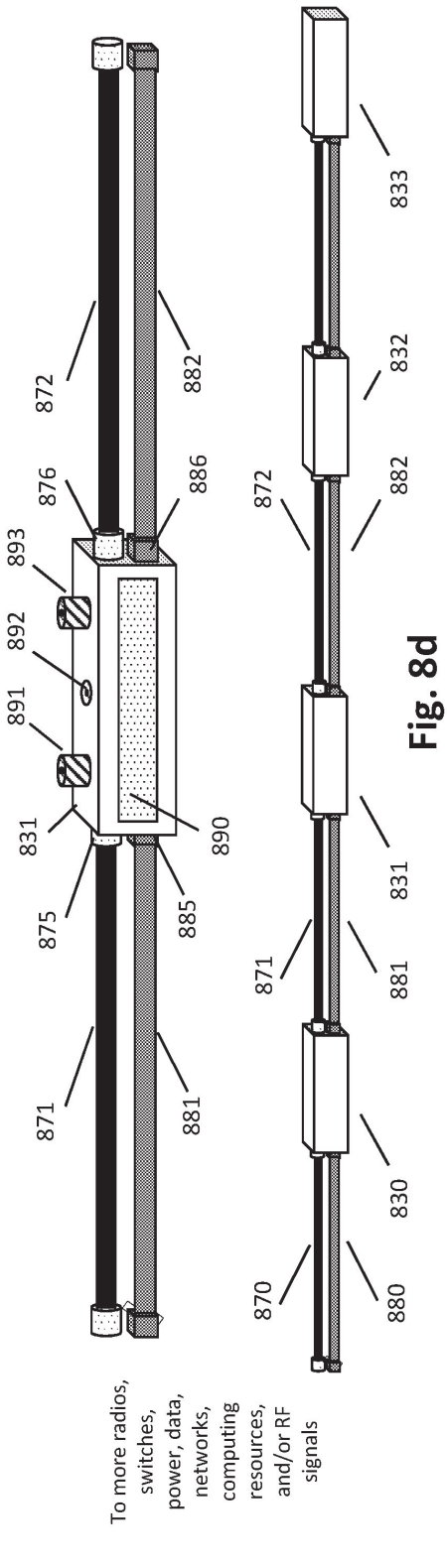
872
882
876
886
893
892
891
831
875
890
885
871
881
To more radios, switches, power, data, networks, computing resources, and/or RF signals
833
832
872
882
871
881
831
870
880
830

Fig. 8d

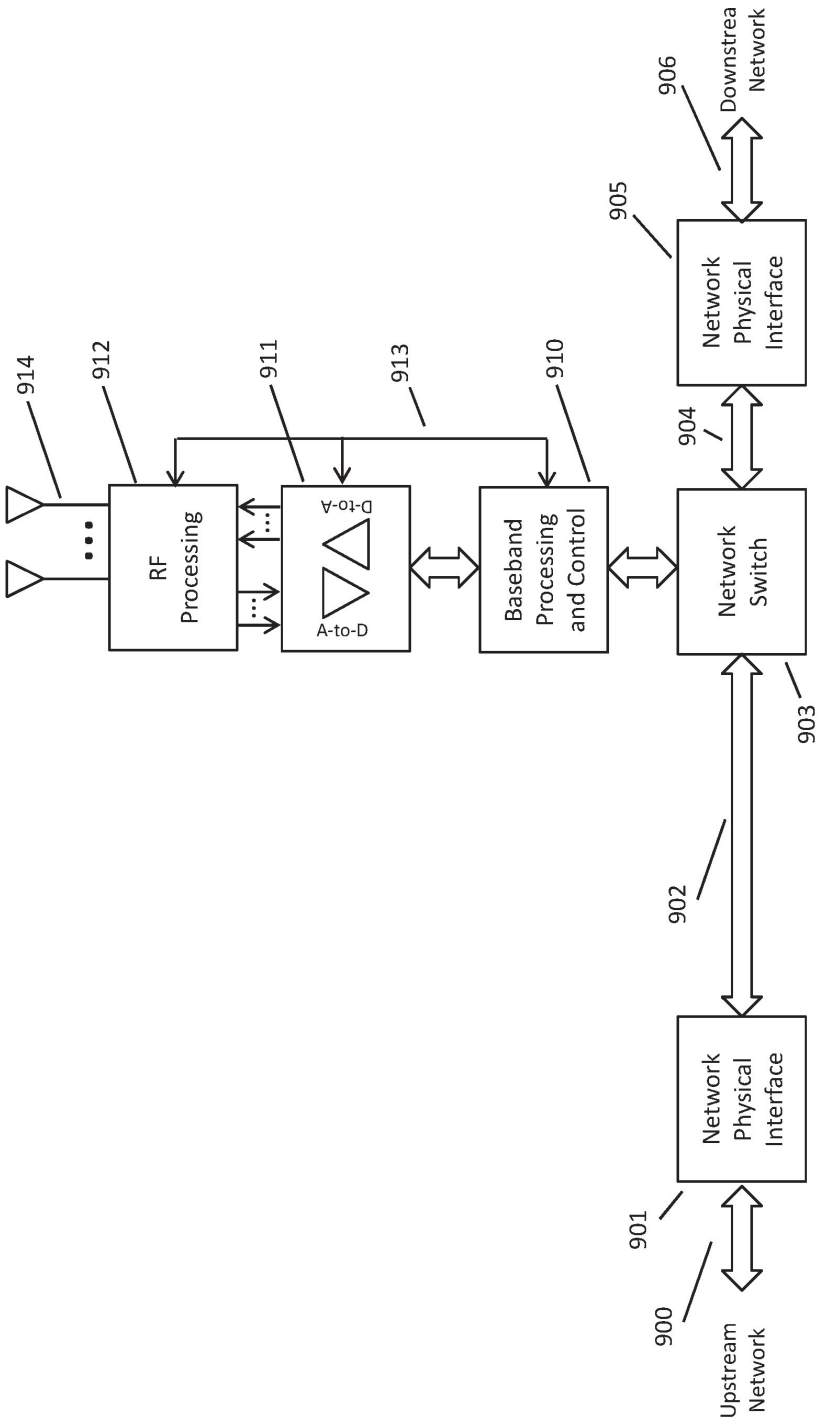
914
912
911
913
910
906
Downstrea
Network
905
Network
Physical
Interface
904
RF
Processing
D-to-A
A-to-D
Baseband
Processing
and Control
Network
Switch
903
902
Network
Physical
Interface
901
900
Upstream
Network

Fig. 9a

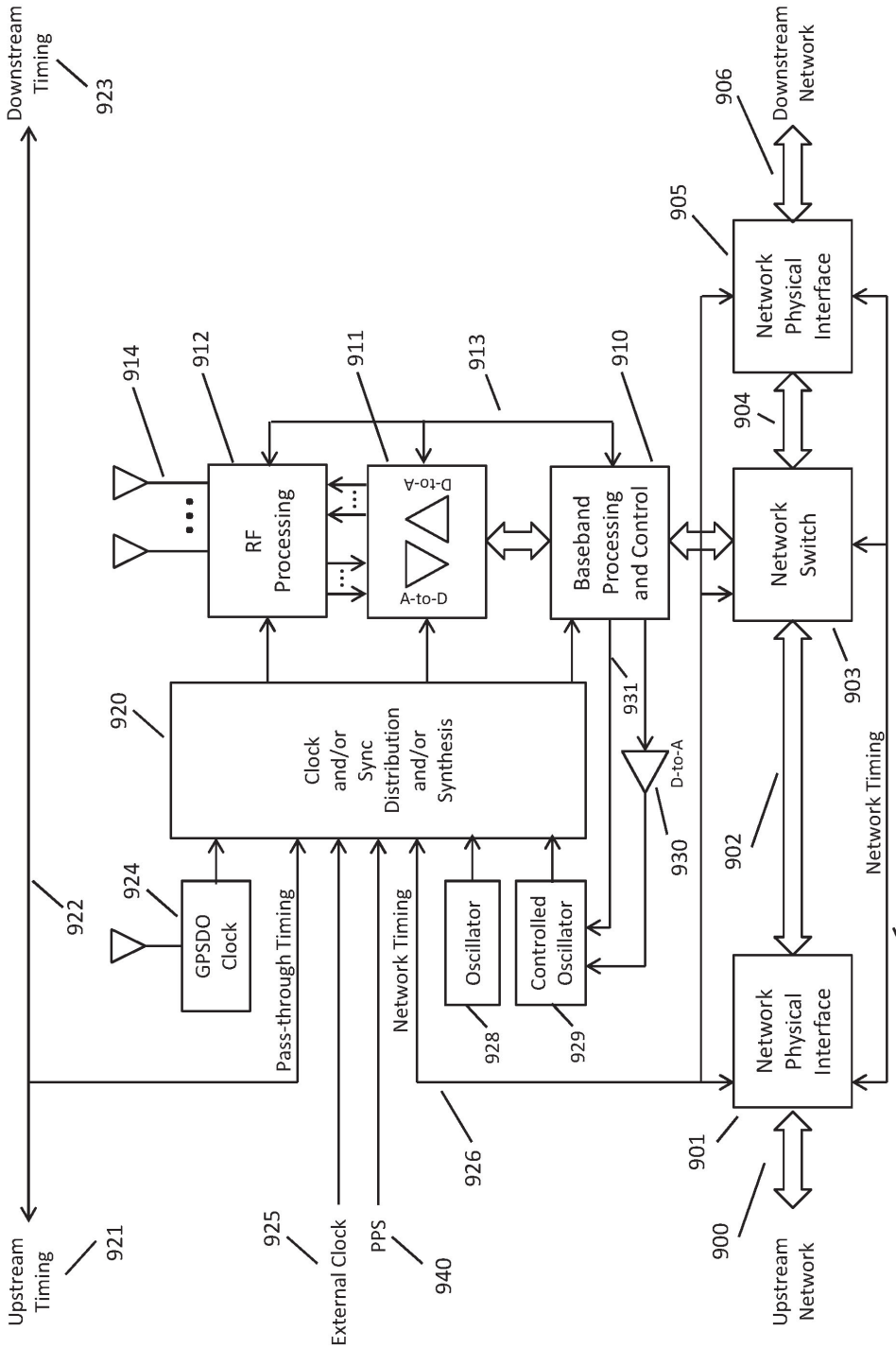
Downstream Timing
923
Upstream Timing
921
922
924
GPSDO Clock
Pass-through Timing
External Clock
925
PPS
940
Network Timing
926
920
Clock and/or Sync Distribution and/or Synthesis
914
912
RF Processing
911
D-to-A
A-to-D
913
910
Baseband Processing and Control
931
D-to-A
930
Oscillator
928
Controlled Oscillator
929
Network Physical Interface
905
906
Downstream Network
904
Network Switch
903
902
Network Timing
927
Network Physical Interface
901
900
Upstream Network

Fig. 9b

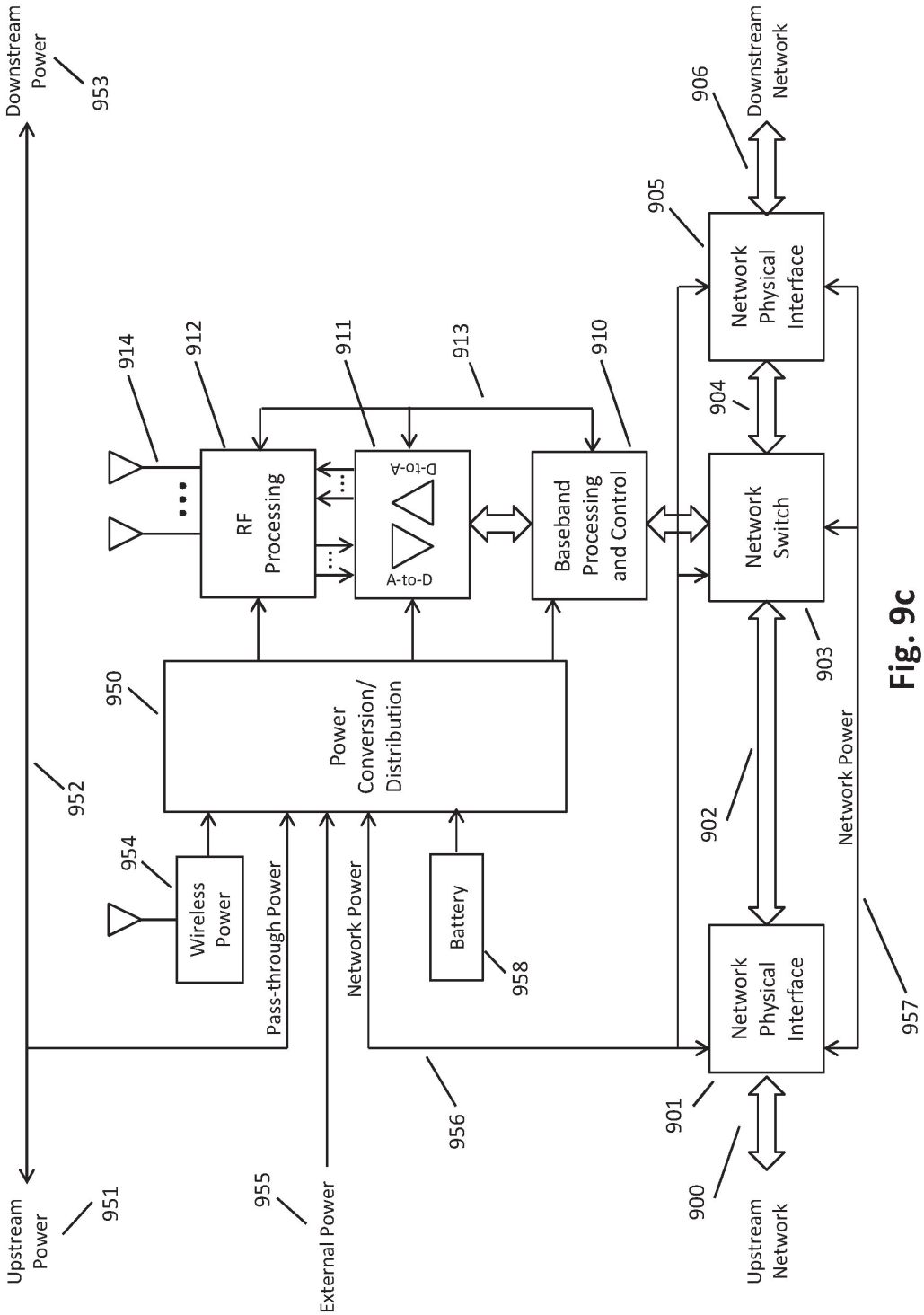
Downstream Power
953
Upstream Power
951
952
Downstream Network
906
905
Network Physical Interface
904
Network Switch
903
902
Network Physical Interface
901
900
Upstream Network
914
912
911
913
910
RF Processing
D-to-A
A-to-D
Baseband Processing and Control
950
Power Conversion/ Distribution
954
Wireless Power
Pass-through Power
External Power
955
Network Power
956
Battery
958
Network Power
957

Fig. 9c

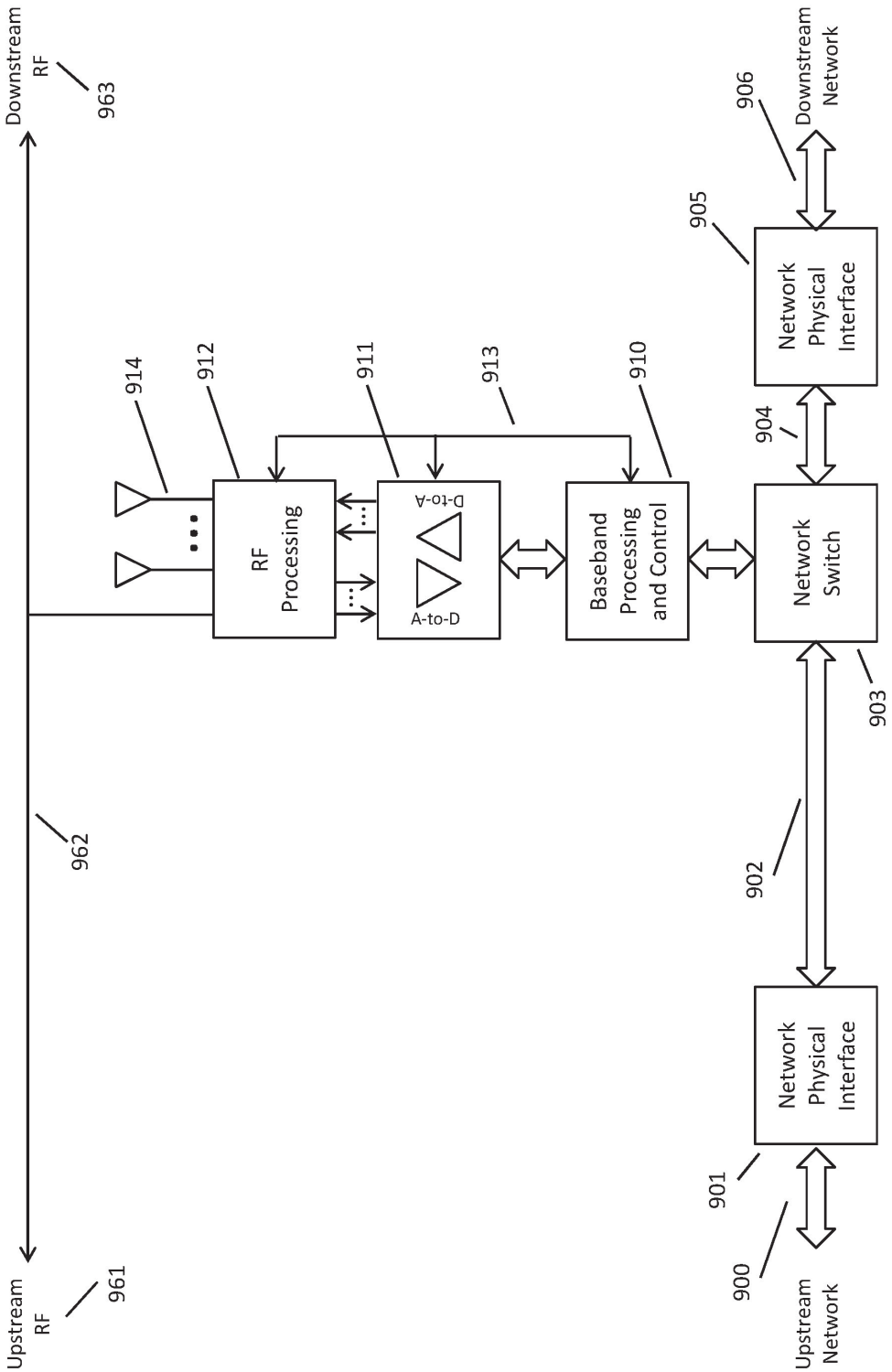
Downstream RF
963
962
Upstream RF
961
914
912
911
913
910
RF Processing
A-to-D
D-to-A
Baseband Processing and Control
Network Switch
903
902
904
905
906
Network Physical Interface
Downstream Network
901
900
Network Physical Interface
Upstream Network

Fig. 9d

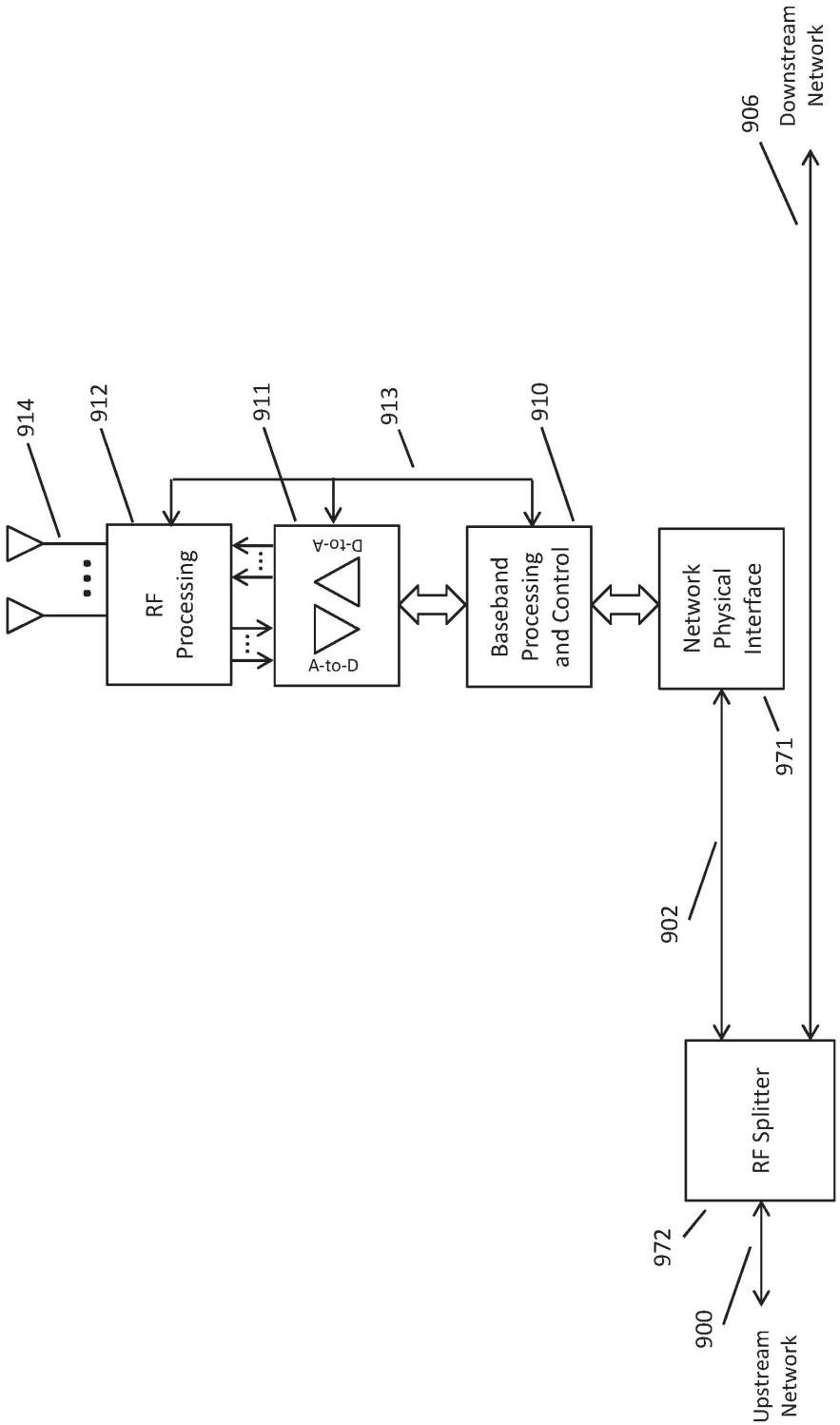
906
Downstream Network
914
912
911
913
910
RF Processing
D-to-A
A-to-D
Baseband Processing and Control
Network Physical Interface
971
902
RF Splitter
972
900
Upstream Network

Fig. 9e

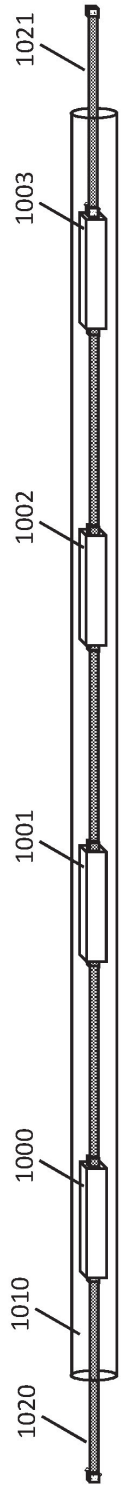

Fig. 10a

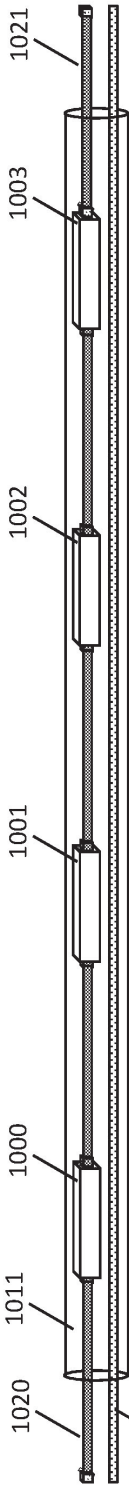

Fig. 10b

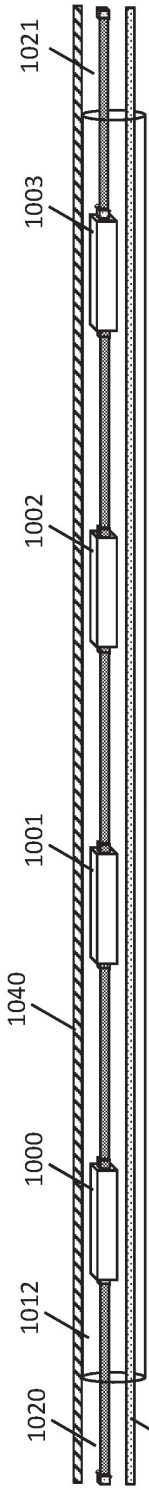

Fig. 10c

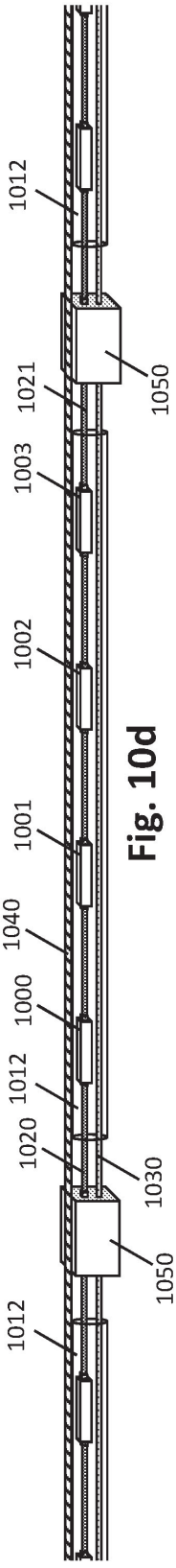

Fig. 10d

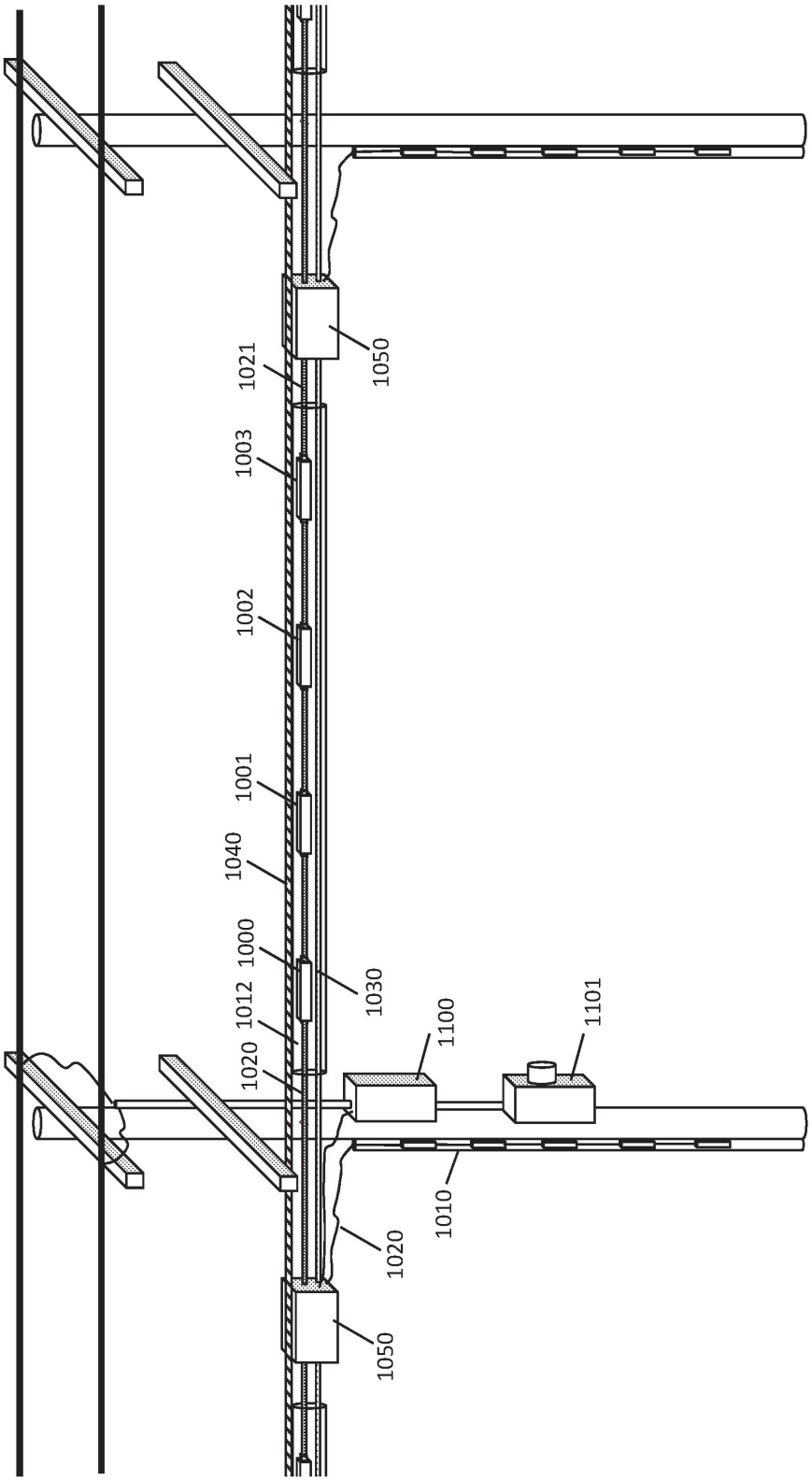
1050
1021
1003
1002
1001
1040
1000
1012
1020
1030
1100
1101
1010
1020
1050

Fig. 11

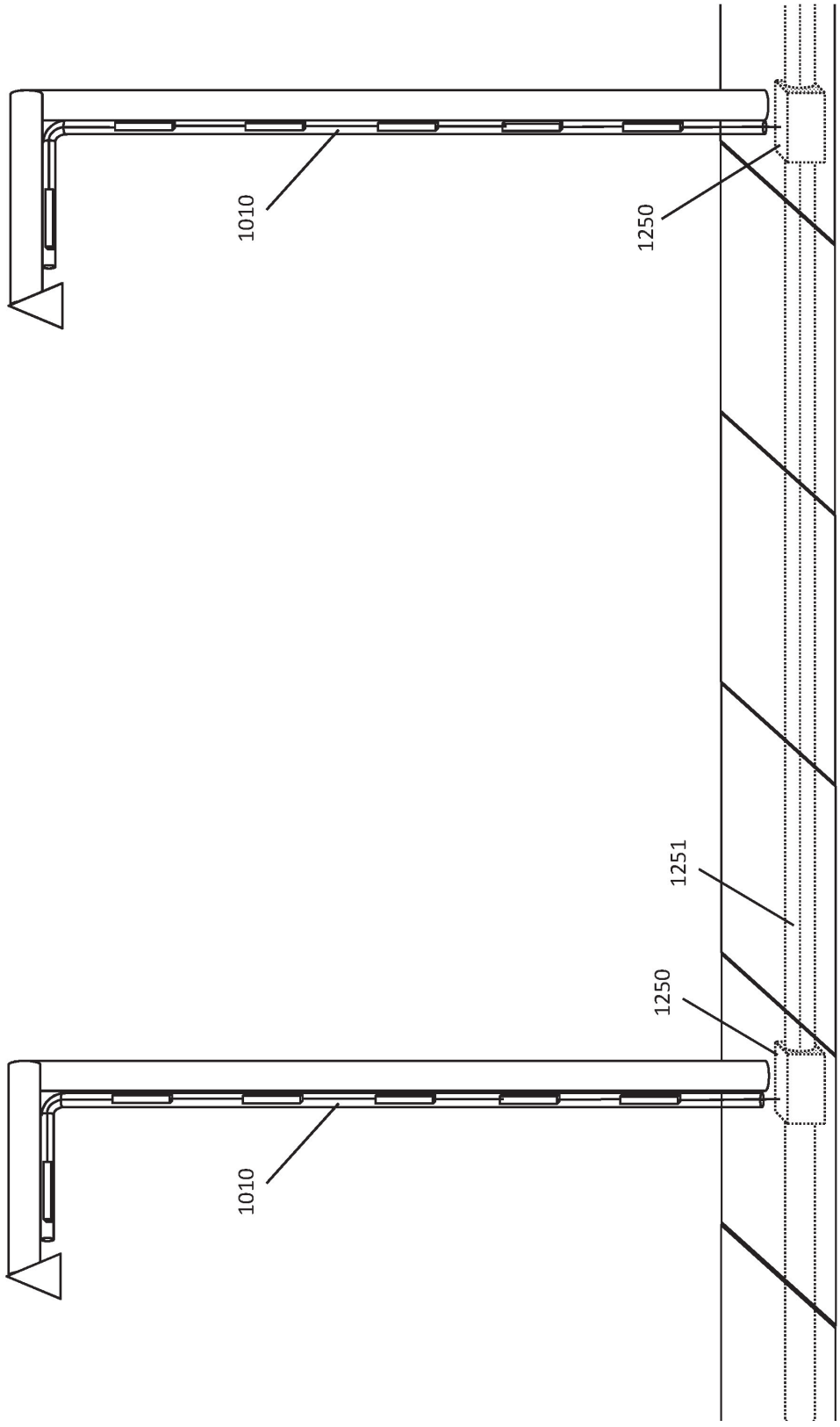

Fig. 12

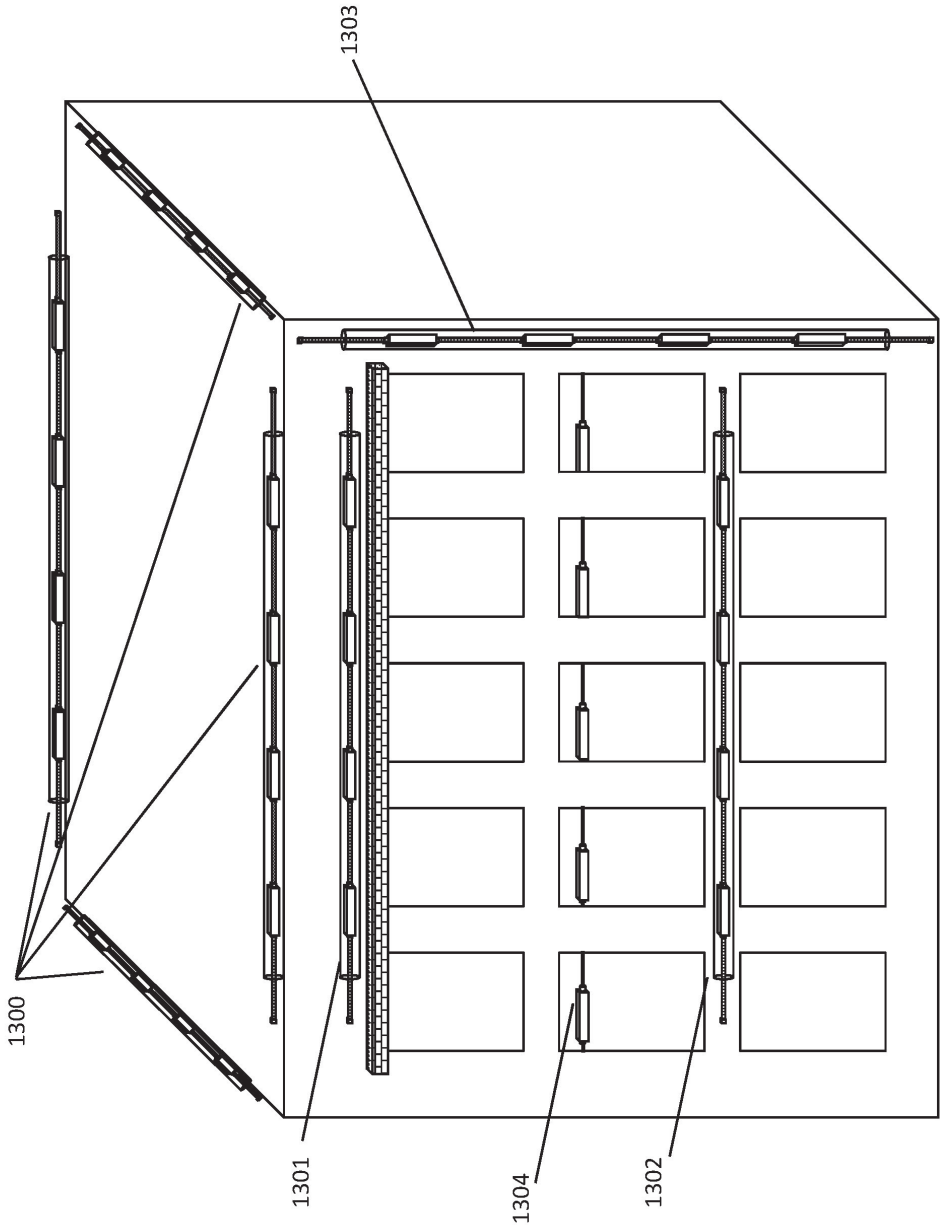

Fig. 13

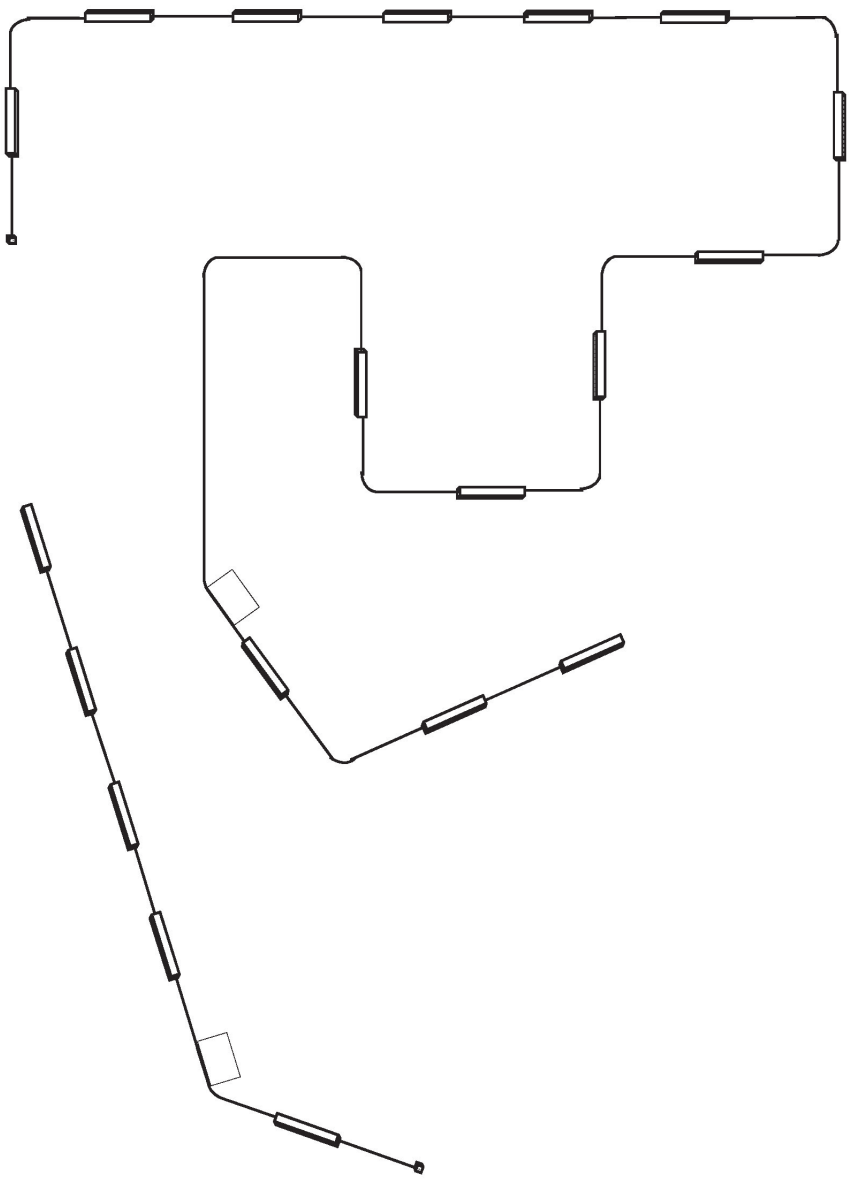

Fig. 14

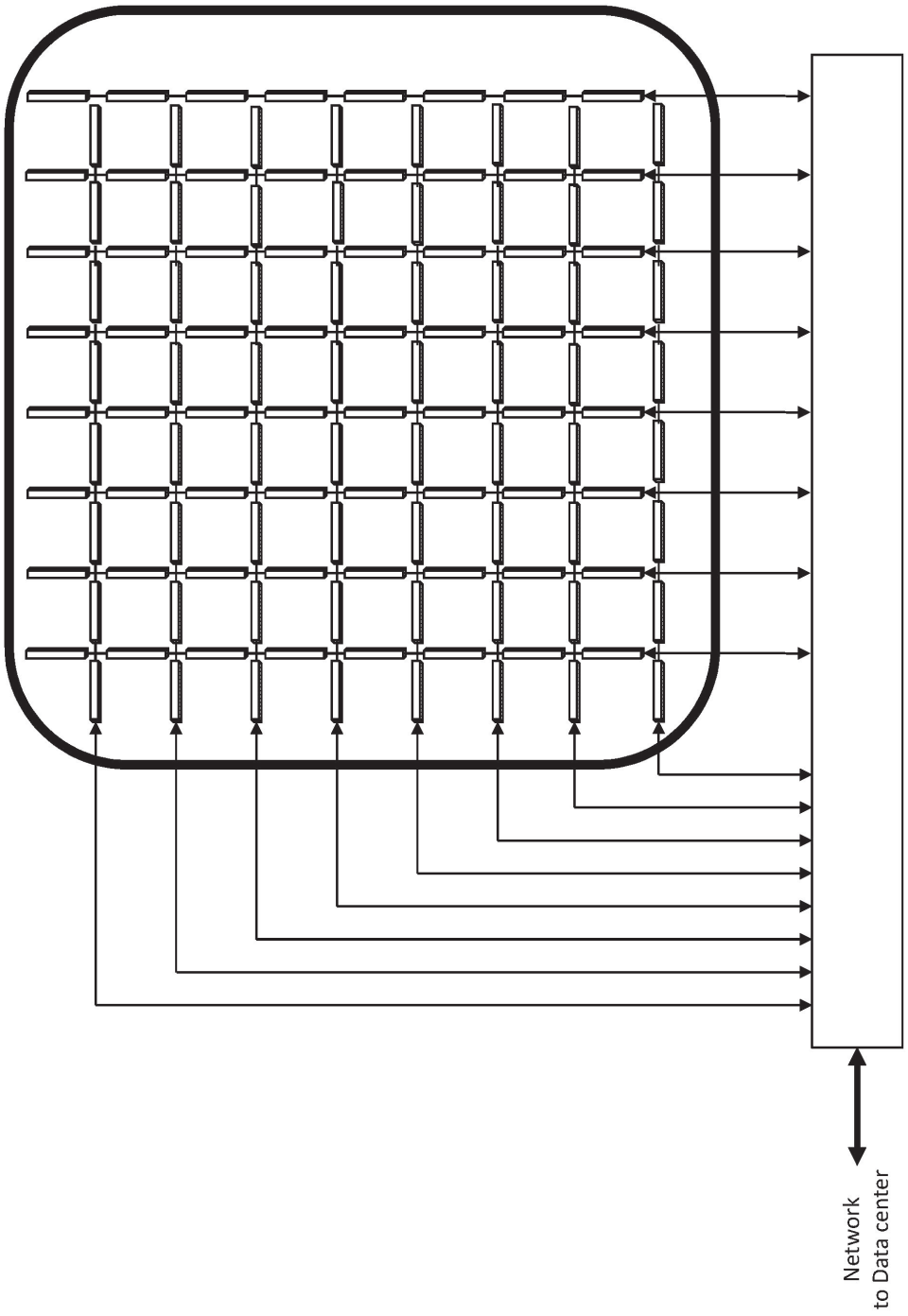

Fig. 15

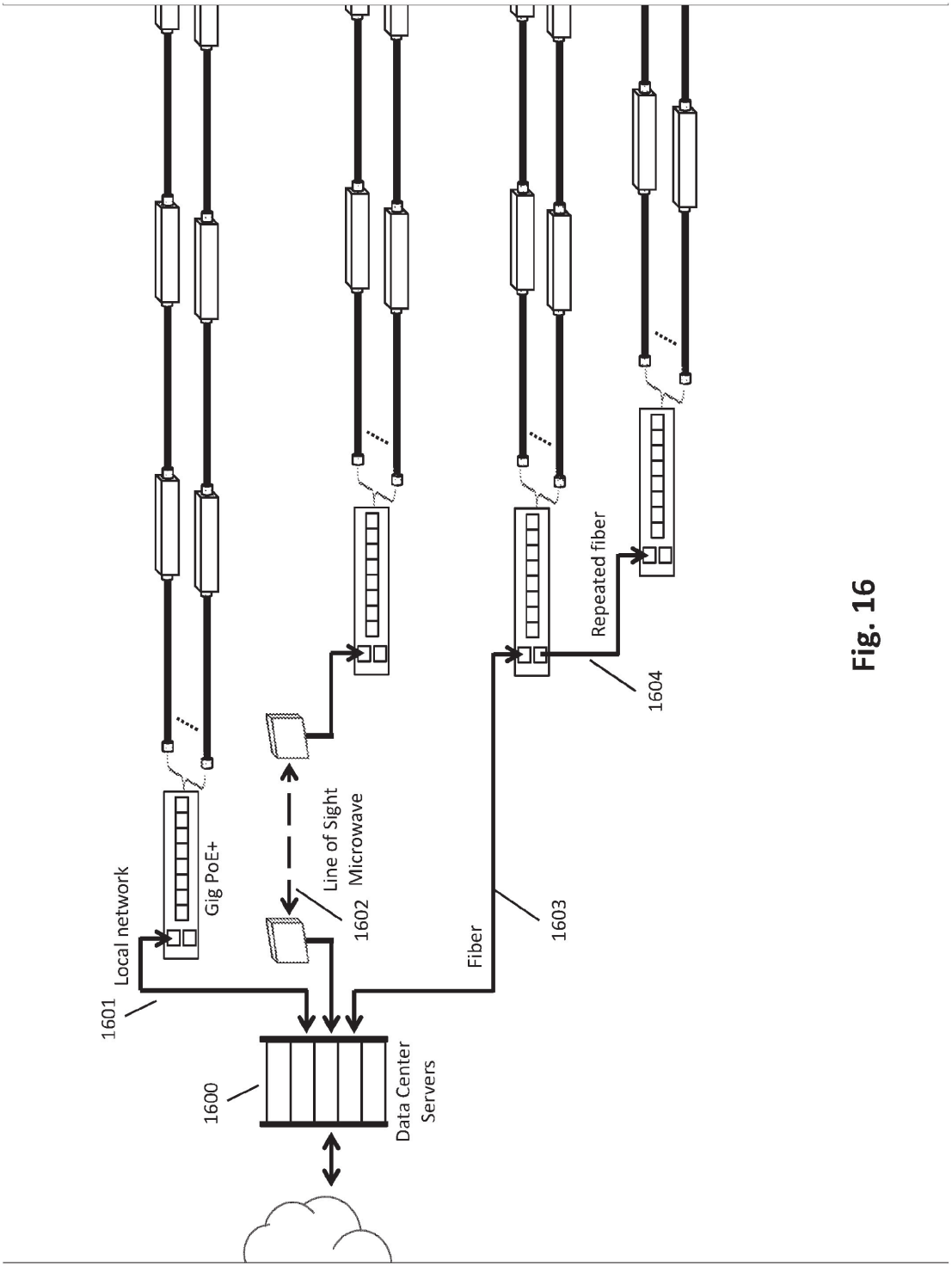
Local network
Gig PoE+
1601
Line of Sight Microwave
1602
Fiber
1603
Repeated fiber
1604
1600
Data Center Servers

Fig. 16