(12) INTERNATIONAL APPLICATION PUBLISHED UNDER THE PATENT COOPERATION TREATY (PCT)

(19) World Intellectual Property Organization
International Bureau

(43) International Publication Date
2 September 2004 (02.09.2004)

PCT

(10) International Publication Number
WO 2004/075371 A1

(51) International Patent Classification[7]: H02J 7/00

(21) International Application Number:
PCT/CA2004/000249

(22) International Filing Date: 20 February 2004 (20.02.2004)

(25) Filing Language: English

(26) Publication Language: English

(30) Priority Data:

10/372,180	21 February 2003 (21.02.2003)	US
2,419,488	21 February 2003 (21.02.2003)	CA

(71) Applicant *(for all designated States except US)*: **RESEARCH IN MOTION LIMITED** [CA/CA]; 295 Phillip Street, Waterloo, Ontario N2L 3W8 (CA).

(72) Inventors; and

(75) Inventors/Applicants *(for US only)*: **VESELIC, Dusan** [CA/CA]; 2226 Arbourview Drive, Oakville, Ontario L6M 3N7 (CA). **GUTHRIE, Martin, G., A.** [CA/CA]; 2913 Quetta Mews, Mississauga, Ontario L5N 1Z6 (CA).

(74) Agents: **WONG, Jeffrey, W.** et al.; Borden Ladner Gervais LLP, 100 Queen Street, Suite 1100, Ottawa, Ontario K1P 1J0 (CA).

(81) Designated States *(unless otherwise indicated, for every kind of national protection available)*: AE, AG, AL, AM, AT, AU, AZ, BA, BB, BG, BR, BW, BY, BZ, CA, CH, CN, CO, CR, CU, CZ, DE, DK, DM, DZ, EC, EE, EG, ES, FI, GB, GD, GE, GH, GM, HR, HU, ID, IL, IN, IS, JP, KE, KG, KP, KR, KZ, LC, LK, LR, LS, LT, LU, LV, MA, MD, MG, MK, MN, MW, MX, MZ, NA, NI, NO, NZ, OM, PG, PH, PL, PT, RO, RU, SC, SD, SE, SG, SK, SL, SY, TJ, TM, TN, TR, TT, TZ, UA, UG, US, UZ, VC, VN, YU, ZA, ZM, ZW.

(84) Designated States *(unless otherwise indicated, for every kind of regional protection available)*: ARIPO (BW, GH, GM, KE, LS, MW, MZ, SD, SL, SZ, TZ, UG, ZM, ZW), Eurasian (AM, AZ, BY, KG, KZ, MD, RU, TJ, TM), European (AT, BE, BG, CH, CY, CZ, DE, DK, EE, ES, FI, FR, GB, GR, HU, IE, IT, LU, MC, NL, PT, RO, SE, SI, SK, TR), OAPI (BF, BJ, CF, CG, CI, CM, GA, GN, GQ, GW, ML, MR, NE, SN, TD, TG).

[Continued on next page]

(54) Title: CIRCUIT AND METHOD OF OPERATION FOR AN ELECTRICAL POWER SUPPLY

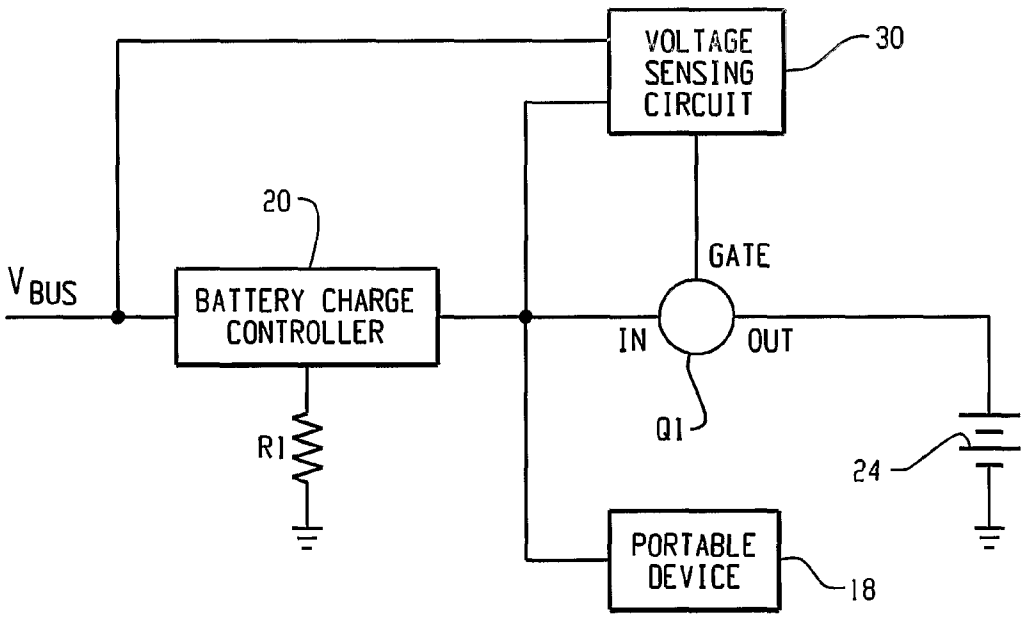

(57) Abstract: A battery charging circuit comprising: a semiconductor switch (Q1) having an output connected to a rechargeable battery (24); a battery charge controller (20) for receiving power from an external source, and supplying output power to a portable device (18) and the input of the semiconductor switch, the current output of the battery charge controller being controllable; and a voltage sensing circuit (30) for: measuring the voltage drop across the battery charge controller; and responding to the voltage drop across the battery charge controller by modulating the semiconductor switch to reduce the quantity of current supplied to the rechargeable battery when the voltage drop is too great; whereby the total power dissipated by the battery charge controller is controlled, the portable device receiving the power it needs to operate and the rechargeable battery receiving any additional available power.

WO 2004/075371 A1

Published:
— *with international search report*
— *before the expiration of the time limit for amending the claims and to be republished in the event of receipt of amendments*

For two-letter codes and other abbreviations, refer to the "Guidance Notes on Codes and Abbreviations" appearing at the beginning of each regular issue of the PCT Gazette.