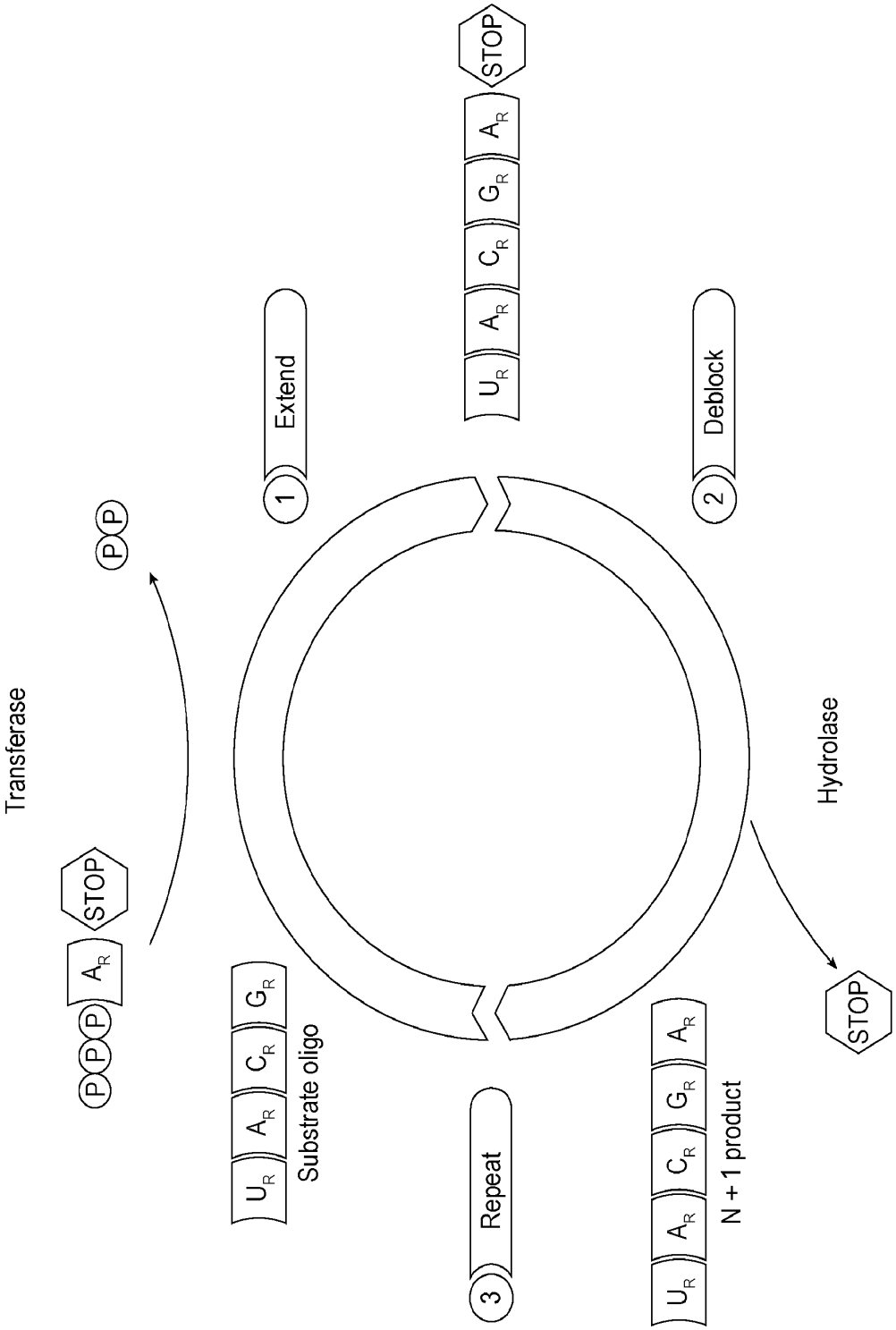
Transferase
P P P
A R
STOP
P P
1 Extend
U R A R C R G R A R STOP
2 Deblock
Hydrolase
STOP
U R A R C R G R
Substrate oligo
3 Repeat
U R A R C R G R A R
N + 1 product

FIG. 1

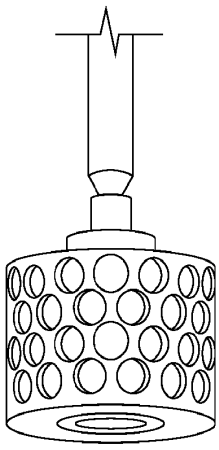

FIG. 2A

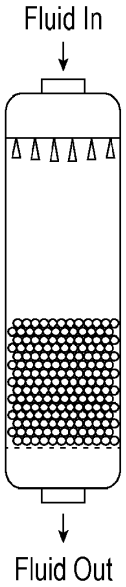

FIG. 2B

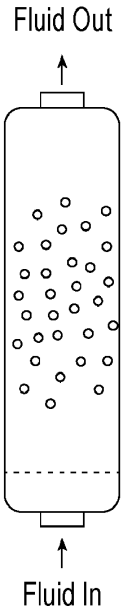

FIG. 2C

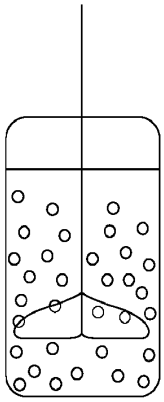

FIG. 2D

FIG. 3

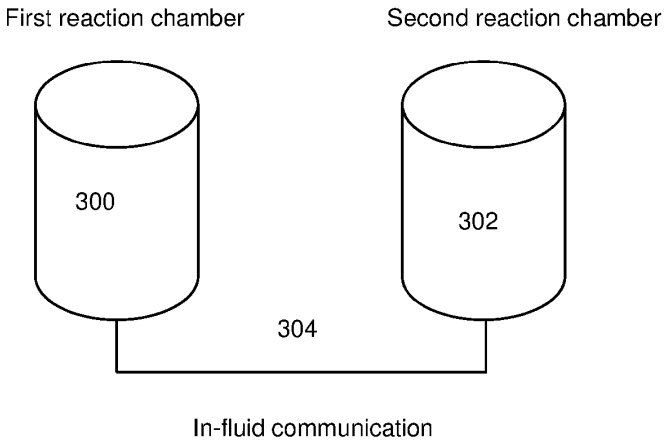
First reaction chamber
Second reaction chamber
300
302
304
In-fluid communication

FIG. 4

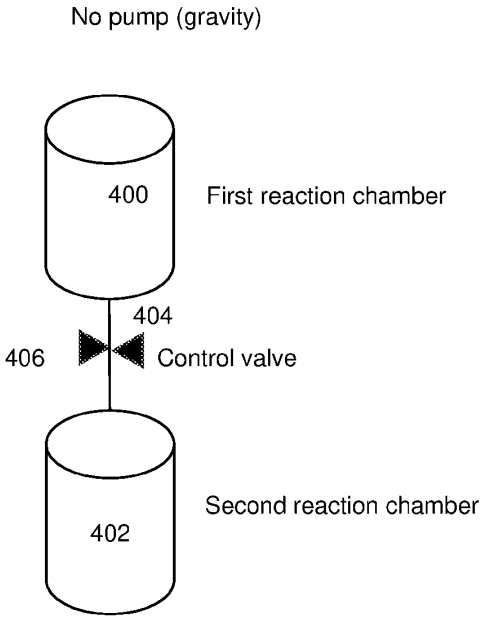
No pump (gravity)
400
First reaction chamber
404
406
Control valve
402
Second reaction chamber

FIG. 5

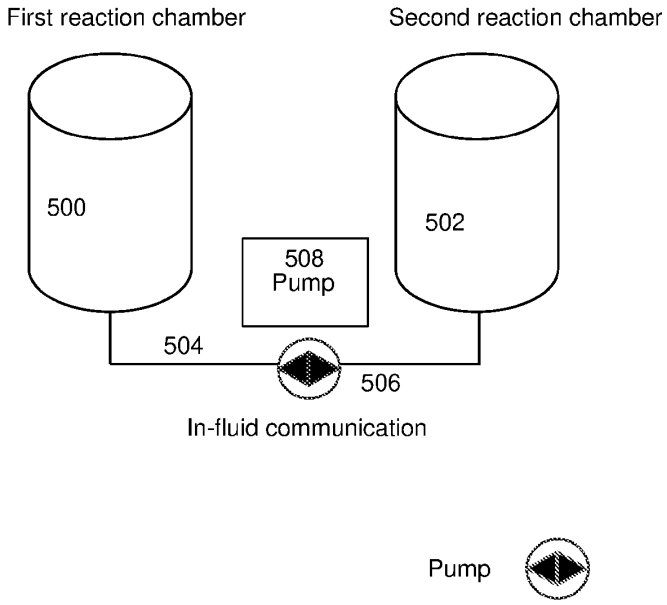
First reaction chamber
Second reaction chamber
500
502
508
Pump
504
506
In-fluid communication
Pump

FIG. 6

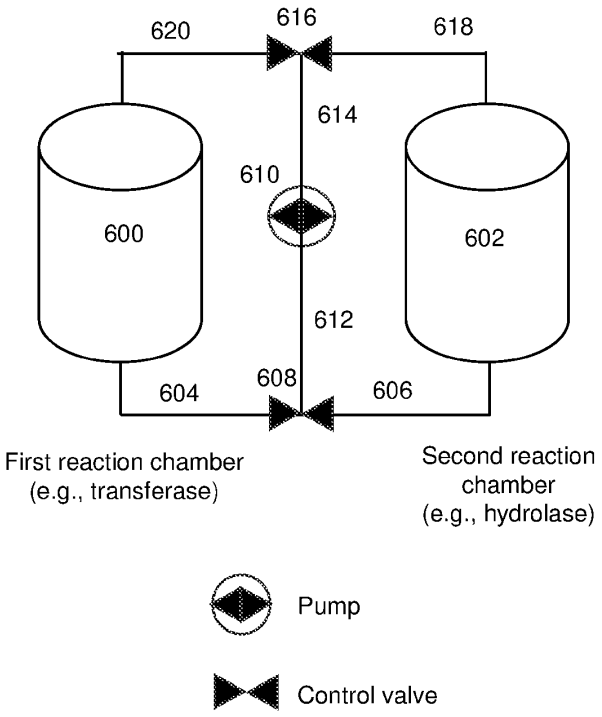
620
616
618
614
610
600
602
612
604
608
606
First reaction chamber
(e.g., transferase)
Second reaction
chamber
(e.g., hydrolase)
Pump
Control valve

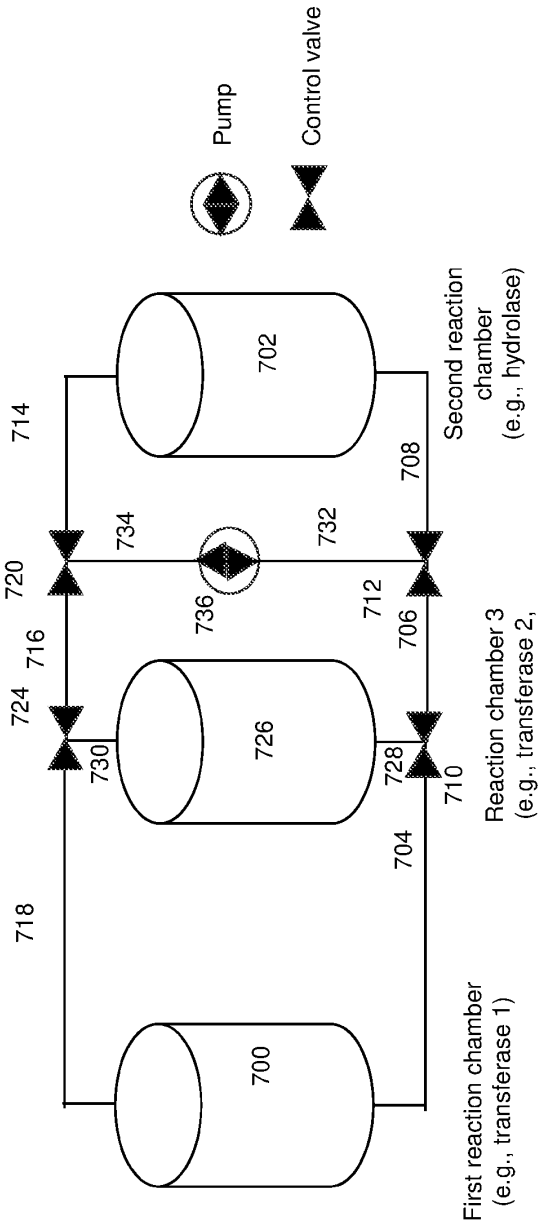
Pump
Control valve
700
702
704
706
708
710
712
714
716
718
720
722
724
726
728
730
732
734
736
First reaction chamber (e.g., transferase 1)
Reaction chamber 3 (e.g., transferase 2, primase, ssRNA ligase)
Second reaction chamber (e.g., hydrolase)

FIG. 7

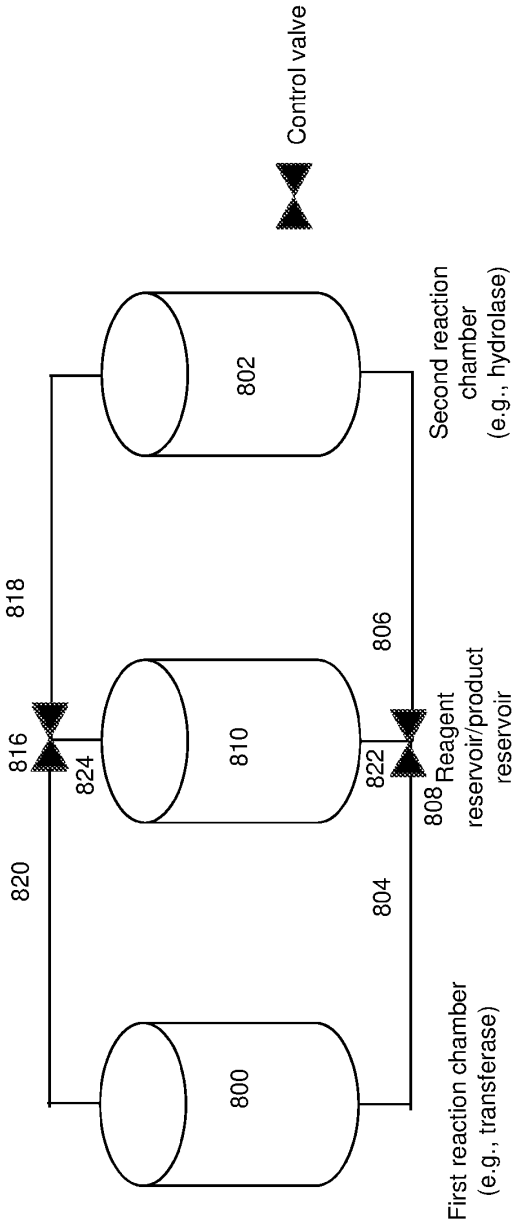
Control valve
802
Second reaction chamber (e.g., hydrolase)
818
806
816
824
810
822
808
Reagent reservoir/product reservoir
820
804
800
First reaction chamber (e.g., transferase)

FIG. 8

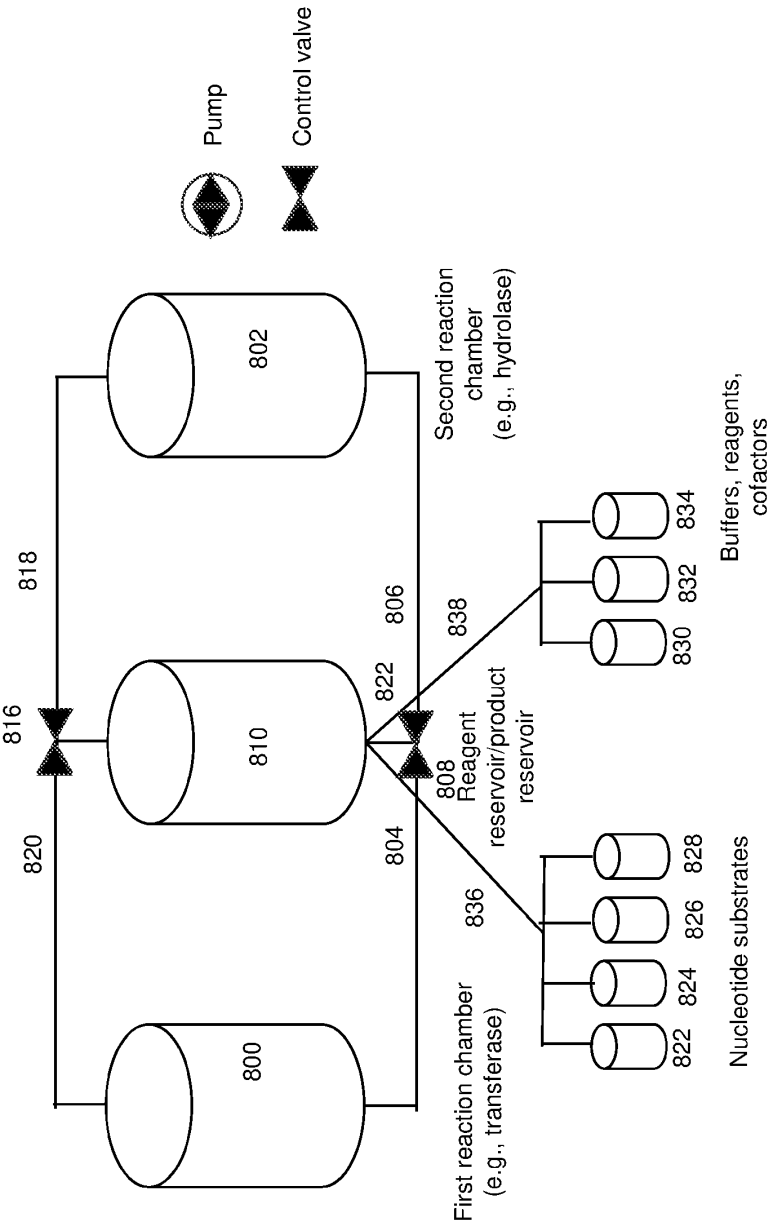
Pump
Control valve
802
Second reaction chamber (e.g., hydrolase)
818
806
838
816
810
822
808
Reagent reservoir/product reservoir
820
804
836
800
First reaction chamber (e.g., transferase)
834
832
830
Buffers, reagents, cofactors
828
826
824
822
Nucleotide substrates

FIG. 9

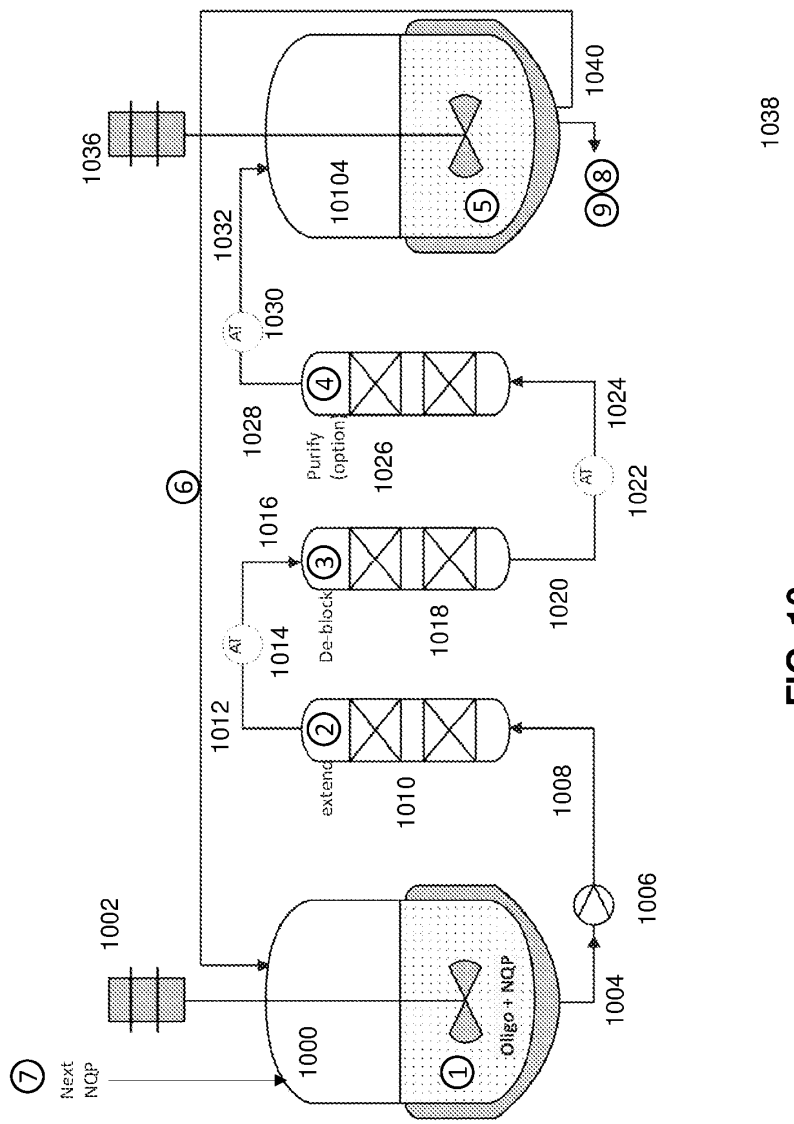
Next NQP
Oligo + NQP
extend
De-block
Purify (option)
AT
1000
1002
1004
1006
1008
1010
1012
1014
1016
1018
1020
1022
1024
1026
1028
1030
1032
1036
1038
1040
10104

FIG. 10

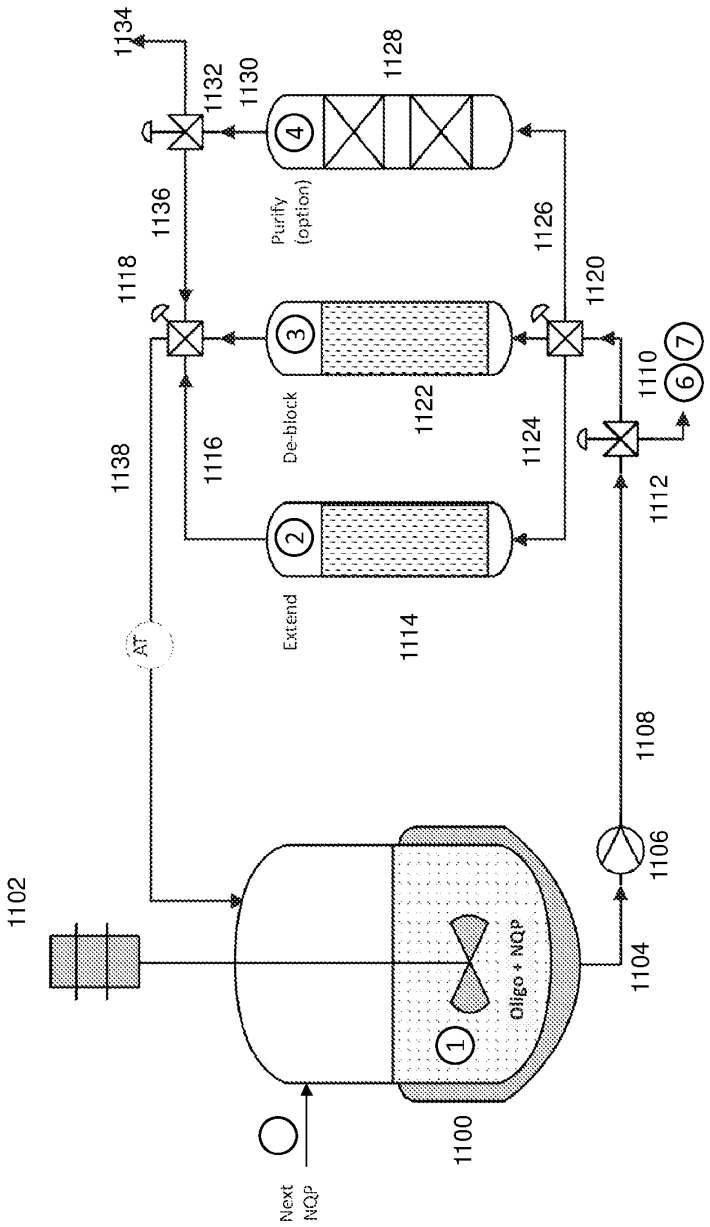
1134
1132
1130
1128
1136
1126
1118
1120
1110
1138
1116
1122
1124
1112
1114
1108
1106
1102
1104
1100
Next NQP
Purify (option)
De-block
Extend
Oligo + NQP
AT

FIG. 11

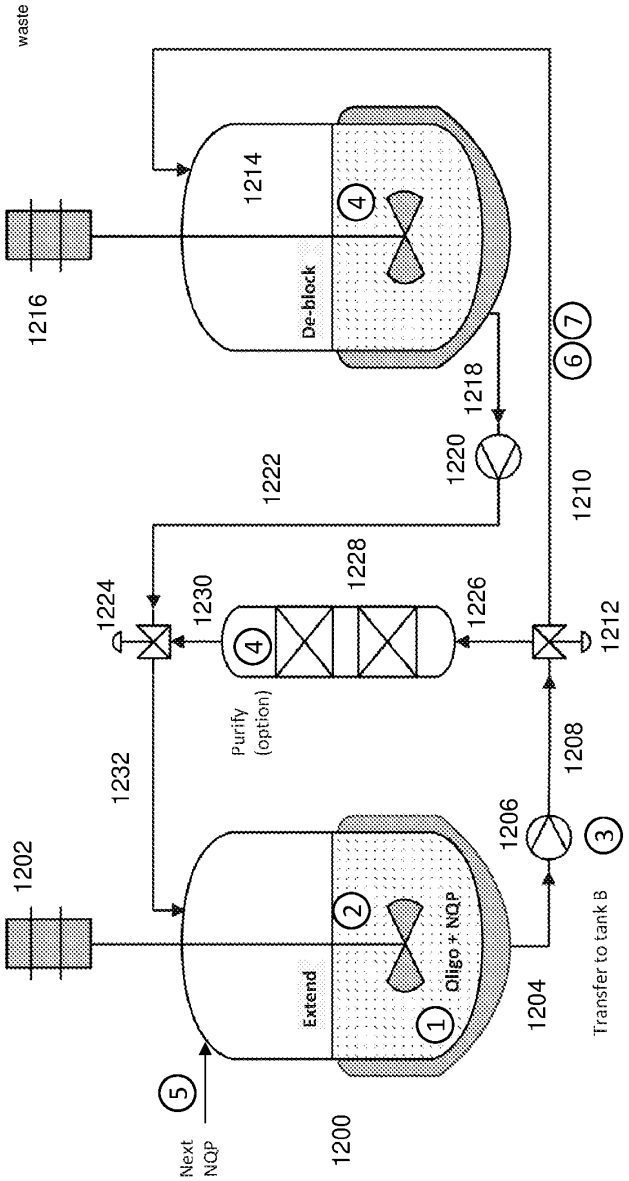
waste
1214
4
De-block
1216
1218
1220
6
7
1222
1210
1224
1230
1228
1226
1212
4
Purify
(option)
1232
1208
1206
3
1202
2
Oligo + NQP
Extend
1
1204
Transfer to tank B
5
Next
NQP
1200

FIG. 12

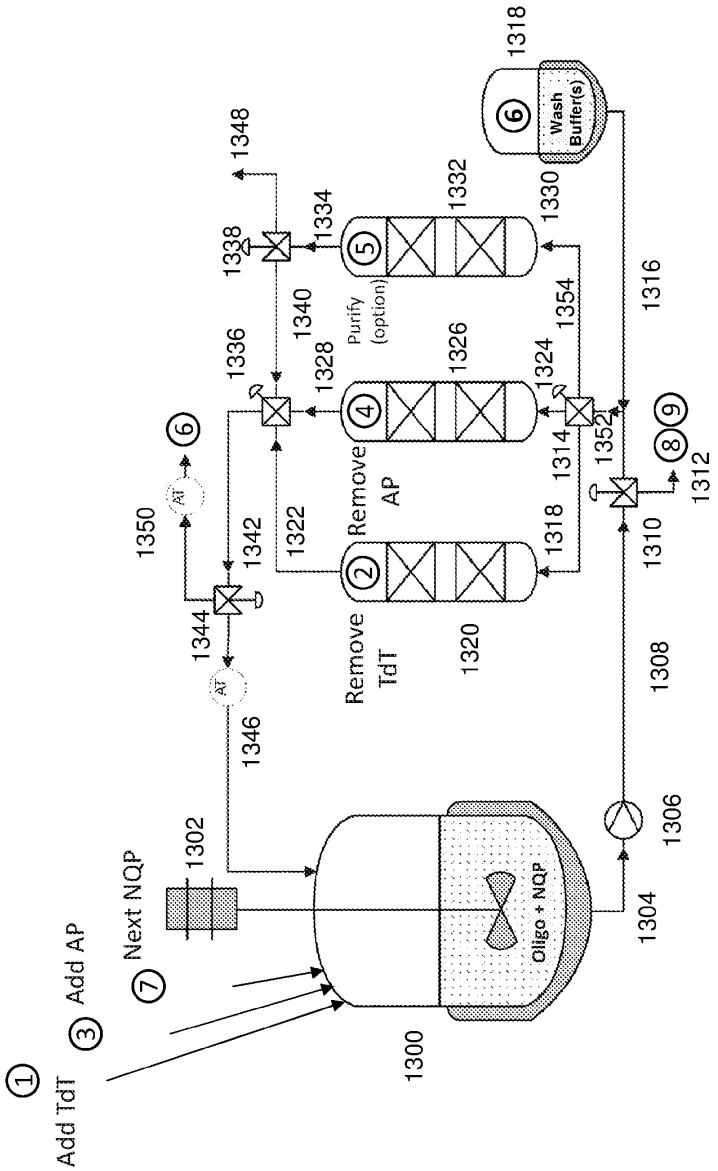
1
Add TdT
3
Add AP
7
Next NQP
1302
1300
Oligo + NQP
1304
1306
1308
1310
1312
1314
1316
1318
6
Wash Buffer(s)
1320
Remove TdT
2
1322
Remove AP
4
1324
1326
1328
Purify (option)
5
1330
1332
1334
1336
1338
1340
1342
1344
1346
1348
1350
AT
6
8
9
1352
1354

FIG. 13

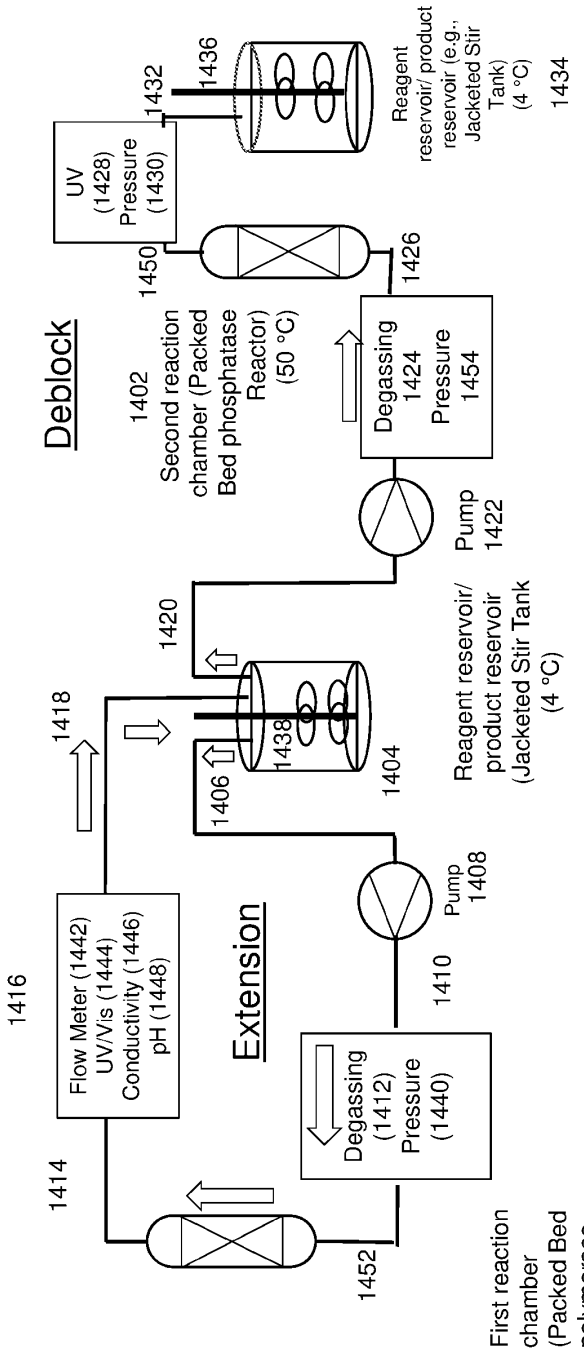
Deblock
Extension
1400
First reaction chamber (Packed Bed polymerase Reactor) (40 °C)
1402
Second reaction chamber (Packed Bed phosphatase Reactor) (50 °C)
1404
Reagent reservoir/ product reservoir (Jacketed Stir Tank (4 °C)
1406
1408
Pump
1410
Degassing (1412) Pressure (1440)
1414
Flow Meter (1442) UV/Vis (1444) Conductivity (1446) pH (1448)
1416
1418
1420
Pump 1422
Degassing 1424 Pressure 1454
1426
UV (1428) Pressure (1430)
1432
Reagent reservoir/ product reservoir (e.g., Jacketed Stir Tank) (4 °C)
1434
1436
1438
1450
1452

FIG. 14

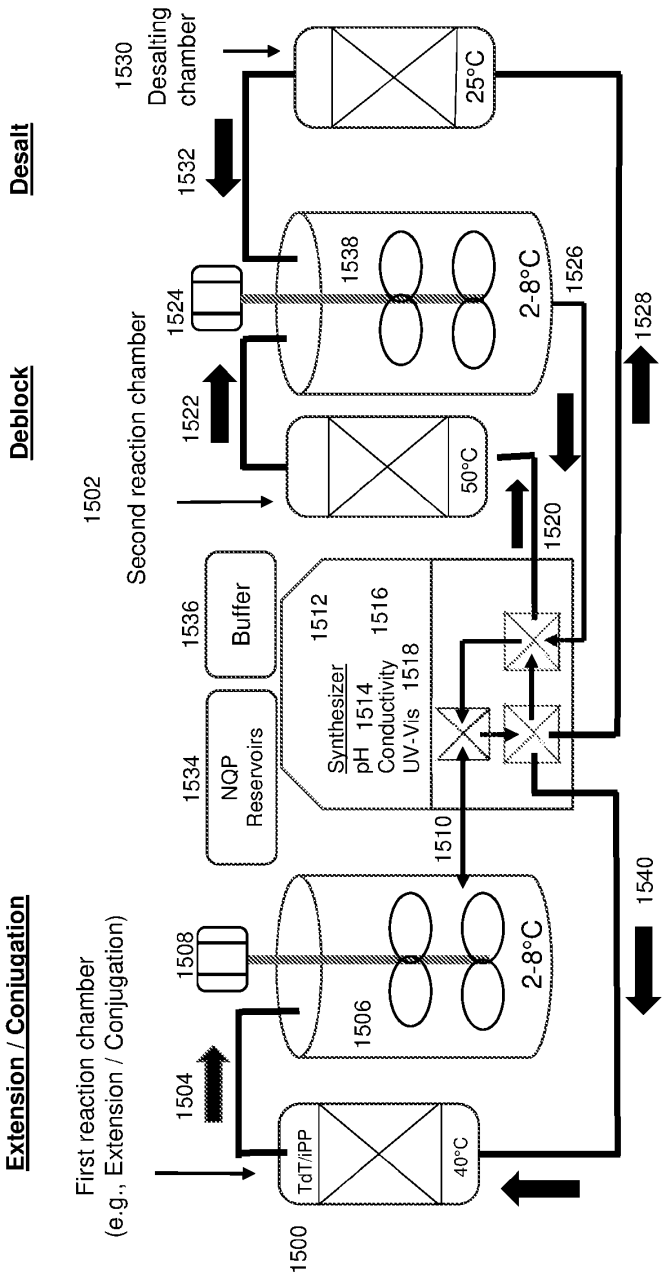
Extension / Conjugation
Deblock
Desalt
First reaction chamber
(e.g., Extension / Conjugation)
Second reaction chamber
Desalting chamber
TdT/iPP
40°C
2-8°C
50°C
25°C
NQP Reservoirs
Buffer
Synthesizer
pH 1514
Conductivity 1516
UV-Vis 1518
1500
1502
1504
1506
1508
1510
1512
1520
1522
1524
1526
1528
1530
1532
1534
1536
1538
1540

FIG. 15

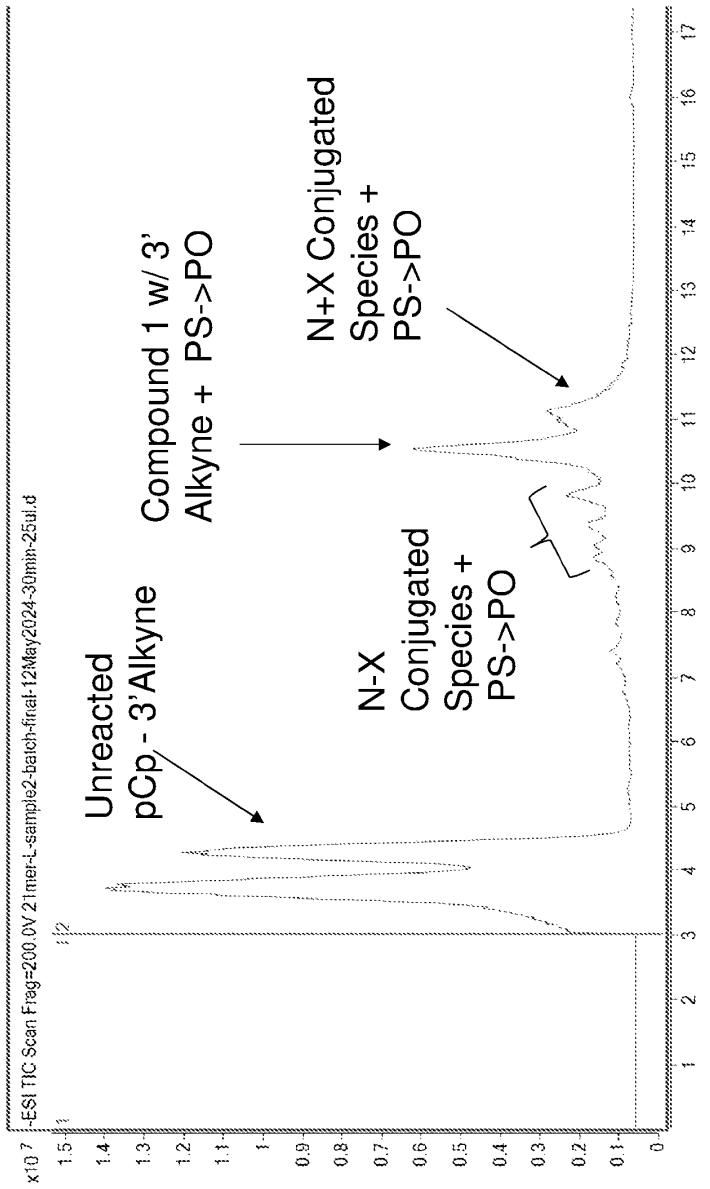
-ESI TIC Scan Frag=200.0V 21mer-L-sample2-batch-final-12May2024-30min-25ul.d
x10 7
Unreacted
pCp - 3'Alkyne
Compound 1 w/ 3'
Alkyne + PS->PO
N-X
Conjugated
Species +
PS->PO
N+X Conjugated
Species +
PS->PO

FIG. 16