(12) INTERNATIONAL APPLICATION PUBLISHED UNDER THE PATENT COOPERATION TREATY (PCT)

(19) World Intellectual Property Organization
International Bureau

(43) International Publication Date
31 May 2001 (31.05.2001)

PCT

(10) International Publication Number
WO 01/39250 A3

(51) International Patent Classification[7]: H01L 23/532, C23C 14/34, C22C 9/00, C25D 7/12

(21) International Application Number: PCT/US00/31310

(22) International Filing Date:
14 November 2000 (14.11.2000)

(25) Filing Language: English

(26) Publication Language: English

(30) Priority Data:
09/449,025 24 November 1999 (24.11.1999) US

(71) Applicant: HONEYWELL INTERNATIONAL INC. [US/US]; Box 2245, 101 Columbia Road, Morristown, NJ 07962 (US).

(72) Inventors: NAGANO, Shozo; 1-3-5-405 Mizuhiki Atsugi, Kanagawa 234-0004 (JP). HARGARTER, Hinrich; P.O. Box 10000, NL-1970 CA IJmuiden (NL). LI, Jianxing; 4908 North Calvin Road, Spokane, WA 99216 (US). BUEHLER, Jane; 18517 East Norman Ridge Lane, Spokane, WA 99217 (US).

(74) Agents: MATKIN, Mark, S.; Wells, St. John, Roberts, Gregory & Matkin P.S., 601 West First Avenue, Suite 1300, Spokane, WA 99201-3828 et al. (US).

(81) Designated States *(national)*: AE, AG, AL, AM, AT, AU, AZ, BA, BB, BG, BR, BY, BZ, CA, CH, CN, CR, CU, CZ, DE, DK, DM, DZ, EE, ES, FI, GB, GD, GE, GH, GM, HR, HU, ID, IL, IN, IS, JP, KE, KG, KP, KR, KZ, LC, LK, LR, LS, LT, LU, LV, MA, MD, MG, MK, MN, MW, MX, MZ, NO, NZ, PL, PT, RO, RU, SD, SE, SG, SI, SK, SL, TJ, TM, TR, TT, TZ, UA, UG, UZ, VN, YU, ZA, ZW.

(84) Designated States *(regional)*: ARIPO patent (GH, GM, KE, LS, MW, MZ, SD, SL, SZ, TZ, UG, ZW), Eurasian patent (AM, AZ, BY, KG, KZ, MD, RU, TJ, TM), European patent (AT, BE, CH, CY, DE, DK, ES, FI, FR, GB, GR, IE, IT, LU, MC, NL, PT, SE, TR), OAPI patent (BF, BJ, CF, CG, CI, CM, GA, GN, GW, ML, MR, NE, SN, TD, TG).

Published:
— *with international search report*

(88) Date of publication of the international search report:
13 December 2001

[Continued on next page]

(54) Title: CONDUCTIVE INTERCONNECTION

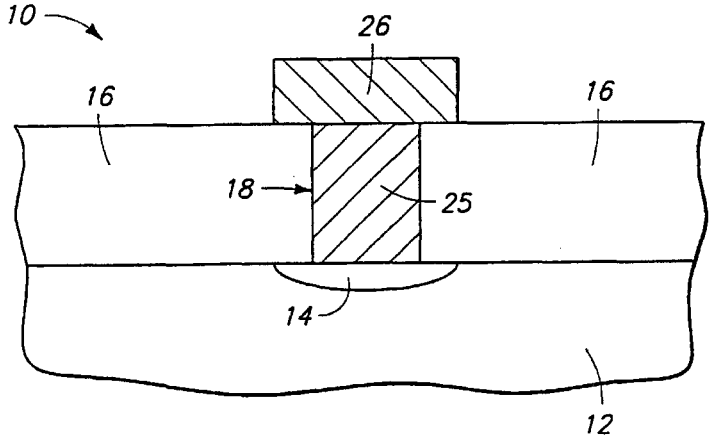

(57) Abstract: A physical vapor deposition target includes an alloy of copper and silver, with the silver being present in the alloy at from less than 1.0 at% to 0.001 at%. In one implementation, a physical vapor deposition target includes an alloy of copper and silver, with the silver being present in the alloy at from 50 at% to 70 at%. A physical vapor deposition target includes an alloy of copper and tin, with tin being present in the alloy at from less than 1.0 at% to 0.001 at%. In one implementation, a conductive integrated circuit metal alloy interconnection includes an alloy of copper and silver, with the silver being present in the alloy at from less than 1.0 at% to 0.001 at%. A conductive integrated circuit metal alloy interconnection includes an alloy of copper and silver, with the silver being present in the alloy at from 50 at% to 70 at%. A conductive integrated circuit metal alloy interconnection includes an alloy of copper and tin, with tin being present in the alloy at from less than 1.0 at% to 0.01 at%. Other useable copper alloys include an alloy of copper and one or more other elements, the one or more other elements being present in the alloy at a total concentration from less than 1.0 at% to 0.001 at% and being selected from the group consisting of Be, Ca, Sr, Ba, Sc, Y, La, Ce, Pr, Nd, Pm, Sm, Eu, Gd, Tb, Dy, Ho, Er, Tm, Yb, Lu, Ti, Zr, Hf, Zn, Cd, B, Ga, In, C, Se, Te, V, Nb, Ta, Cr, Mo, W, Mn, Tc, Re, Fe, Ru, Os, Co, Rh, Ni, Pd, Pt, Au, Tl, and Pb. An electroplating anode is formed to comprise one or more of the above alloys.

WO 01/39250 A3

For two-letter codes and other abbreviations, refer to the "Guidance Notes on Codes and Abbreviations" appearing at the beginning of each regular issue of the PCT Gazette.