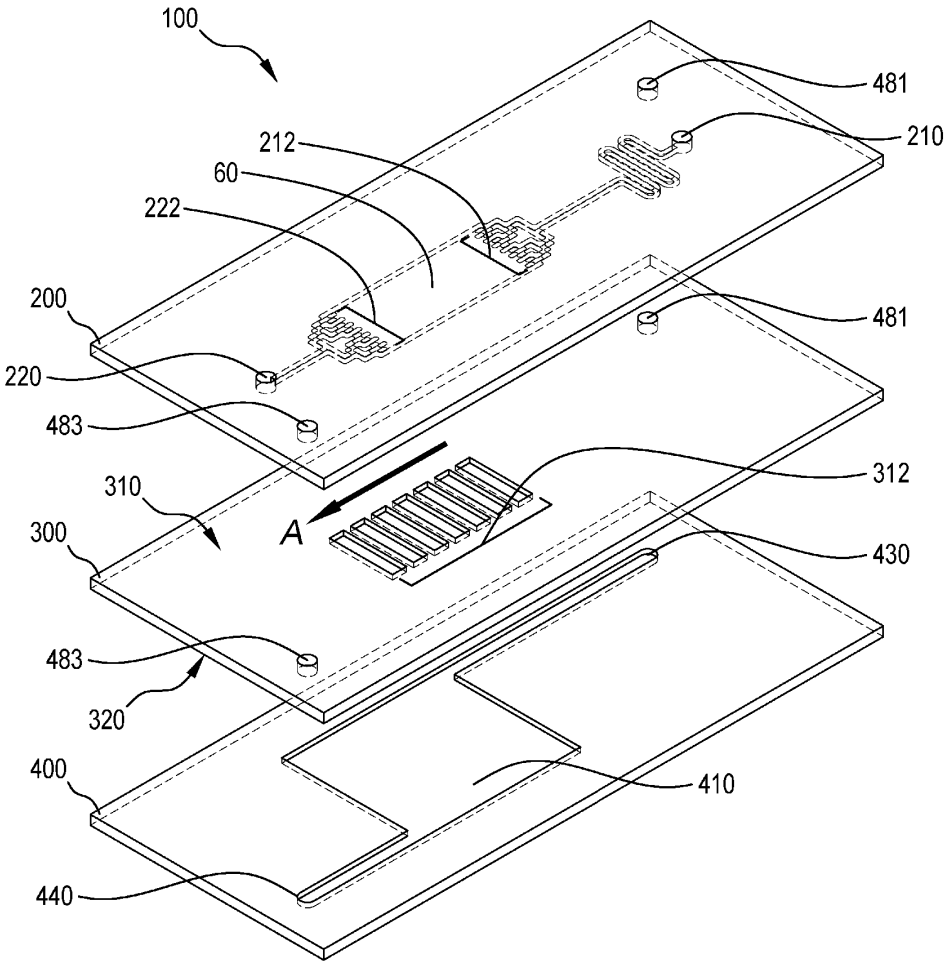

Figure 1

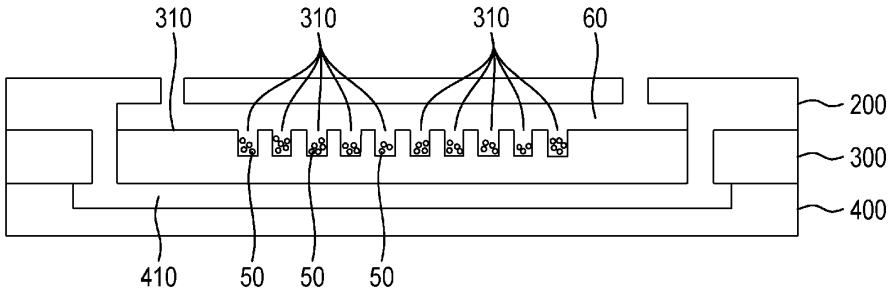

Figure 2

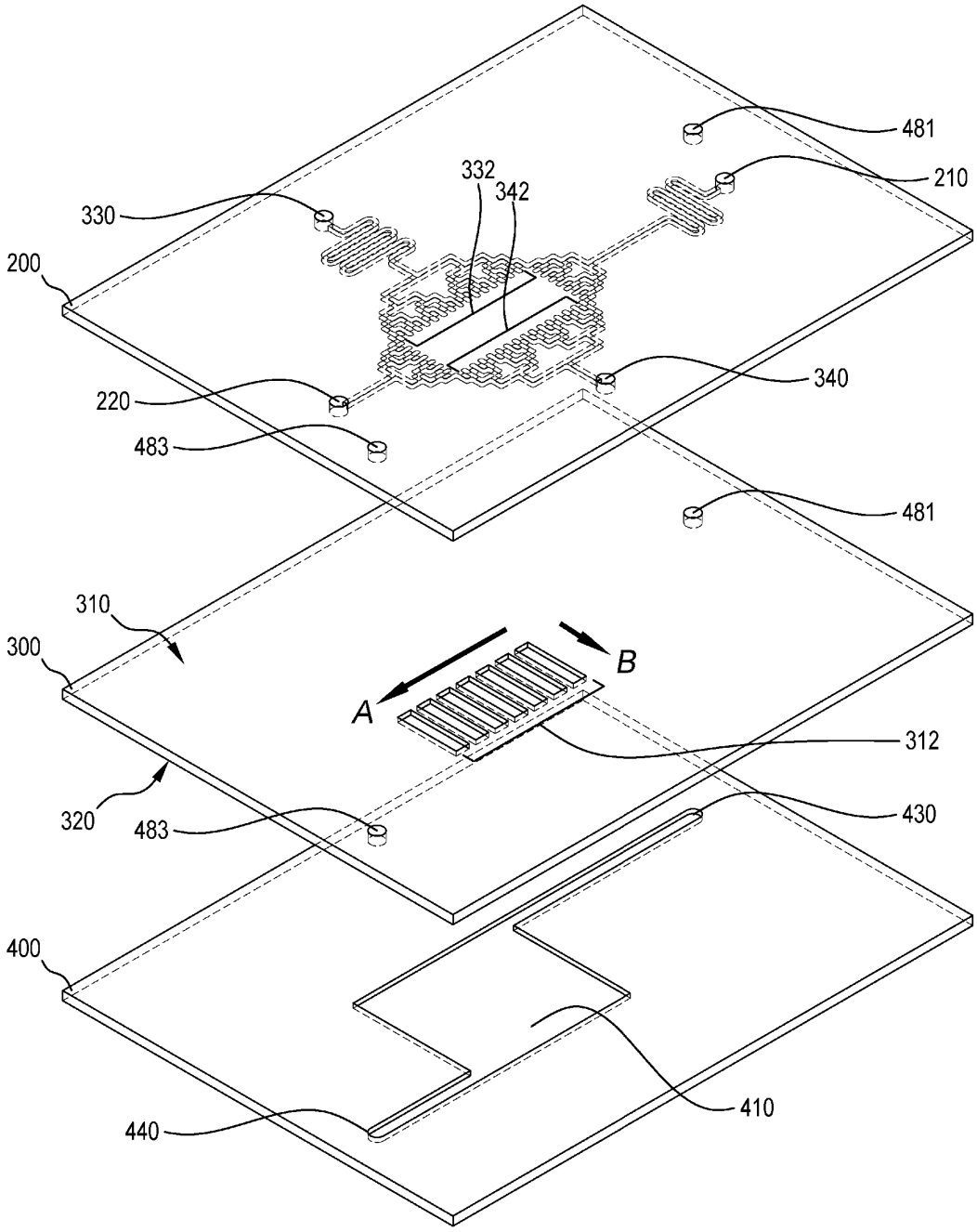
481
210
332
342
330
200
340
220
483
481
310
300
A
B
312
320
483
430
400
410
440

Figure 3

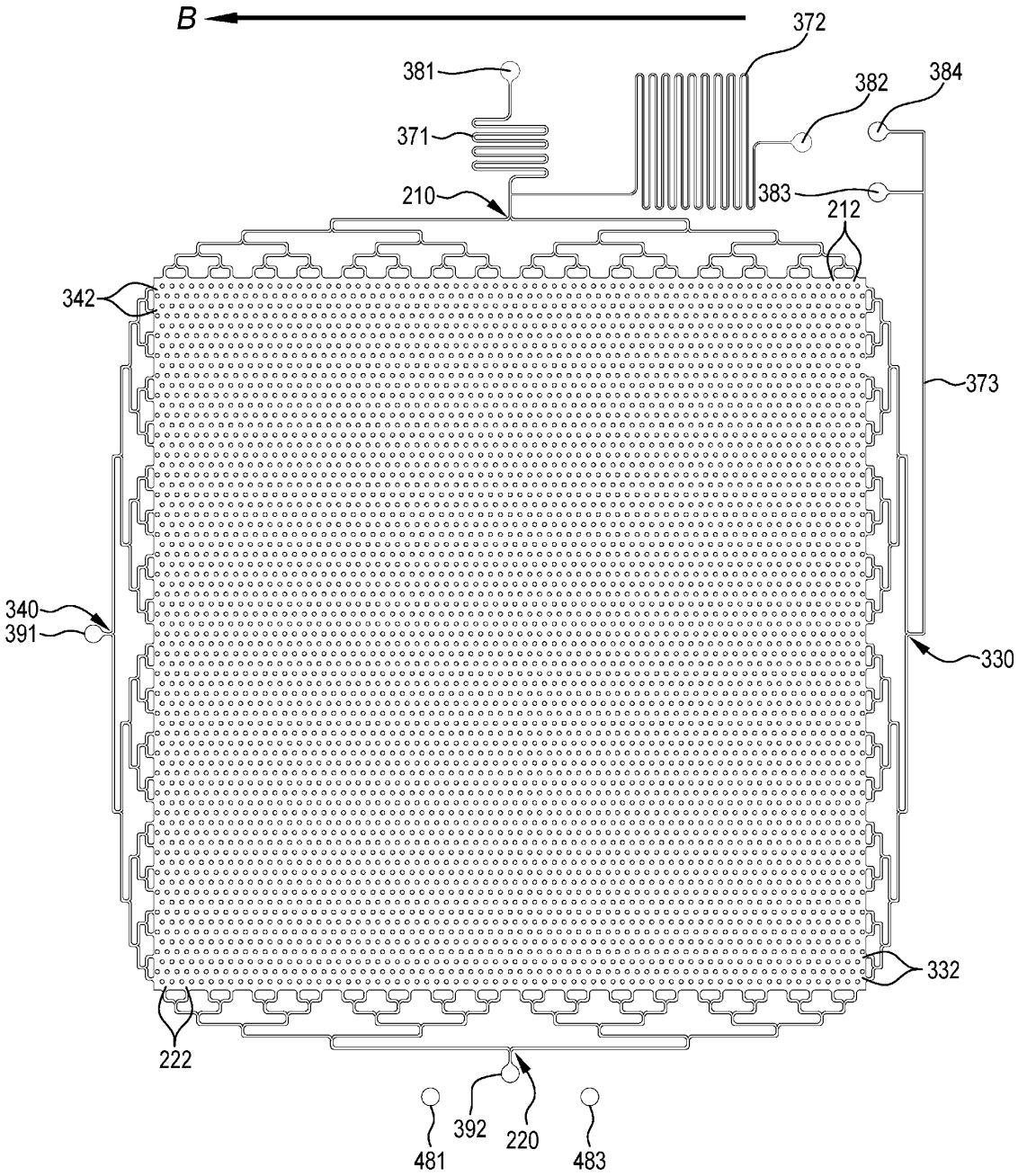

Figure 4

Substitute Sheet

(Rule 26) RO/AU

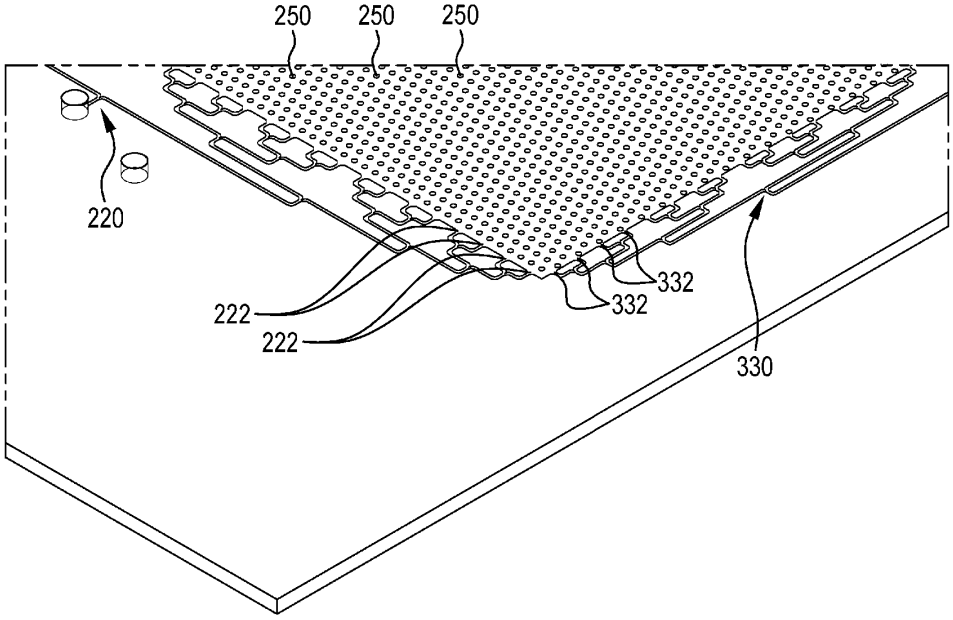

Figure 5

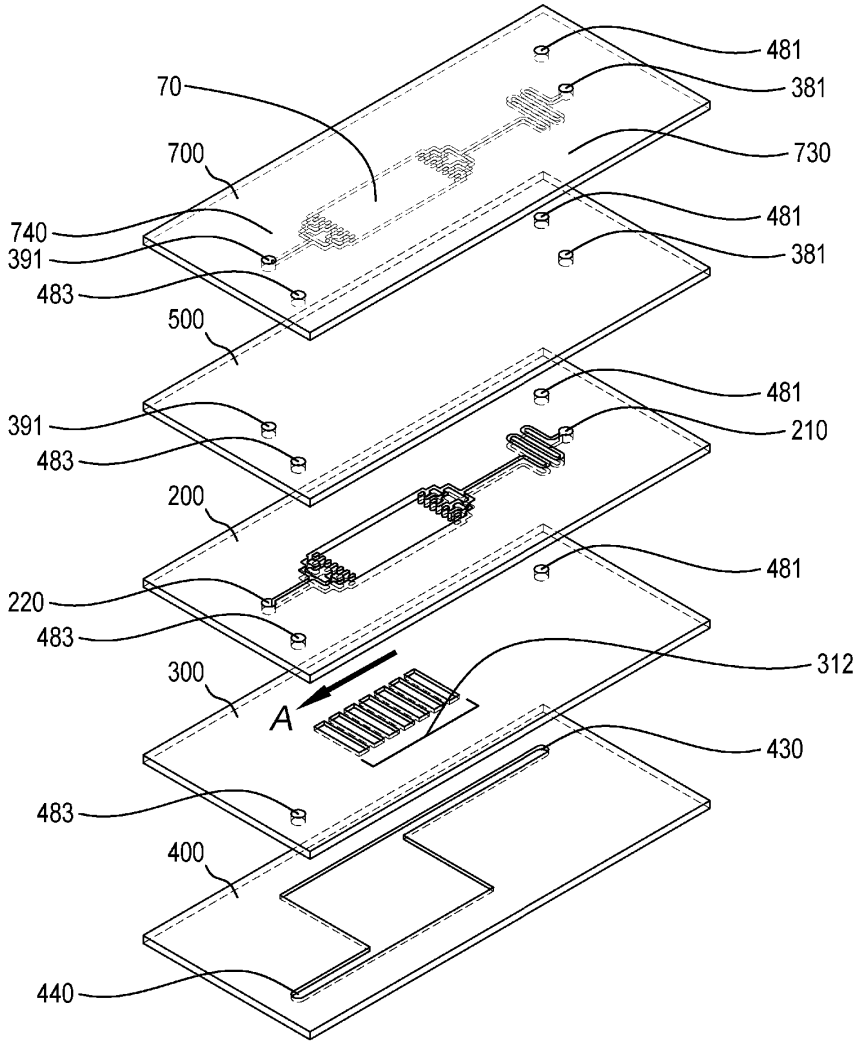

Figure 6

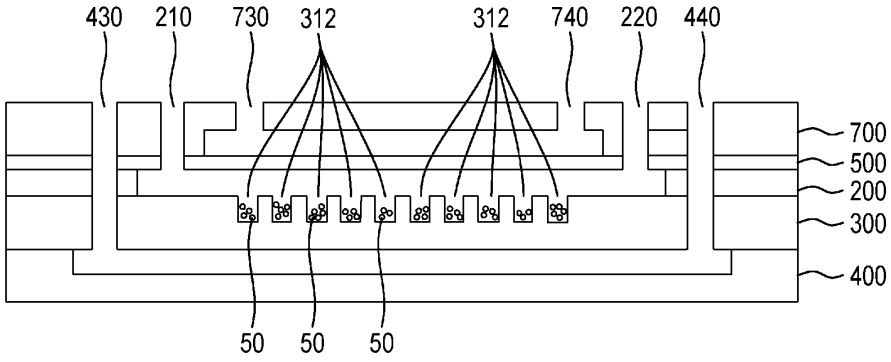

Figure 7

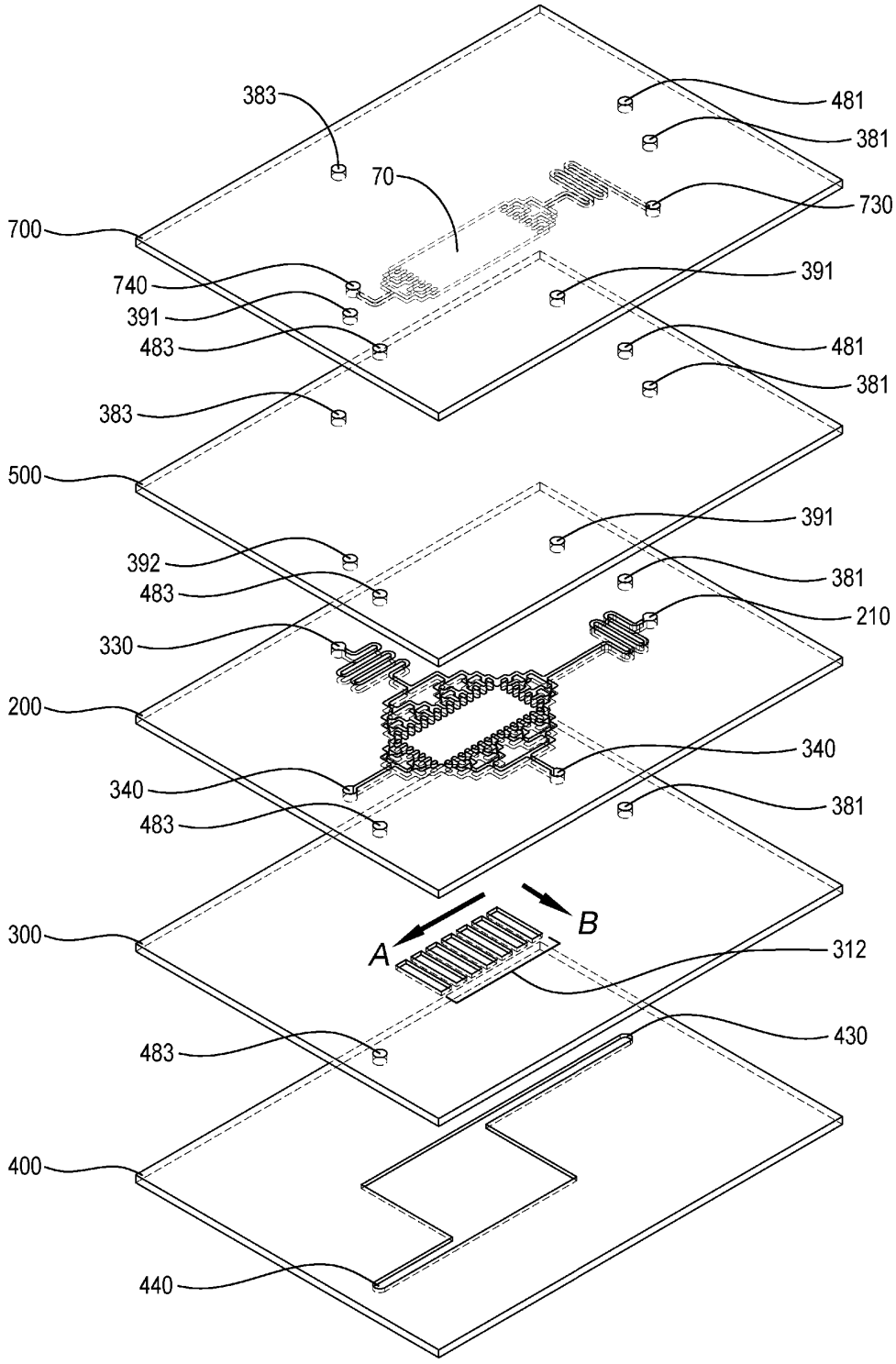

Figure 8

Substitute Sheet

(Rule 26) RO/AU

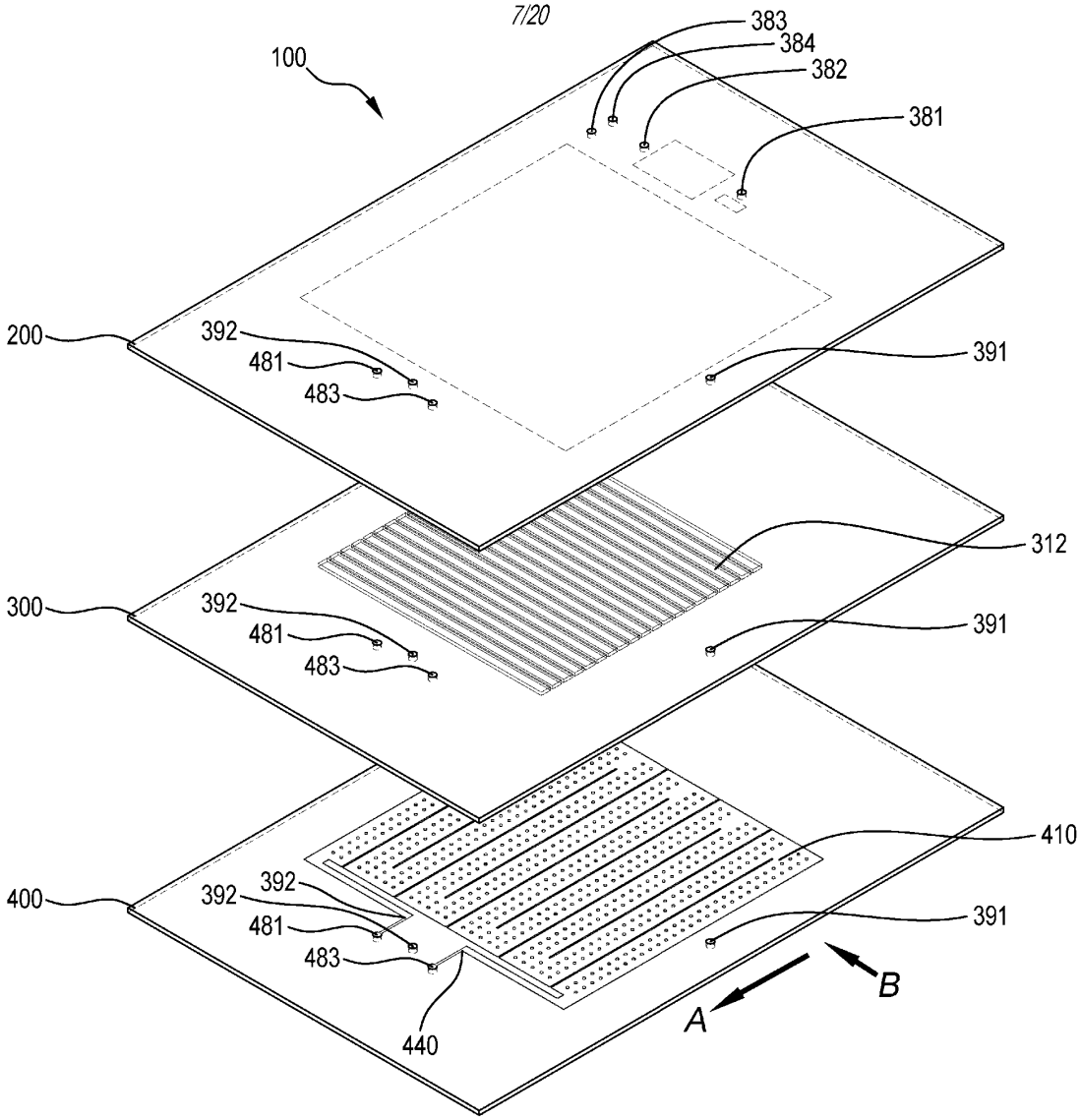

Figure 9

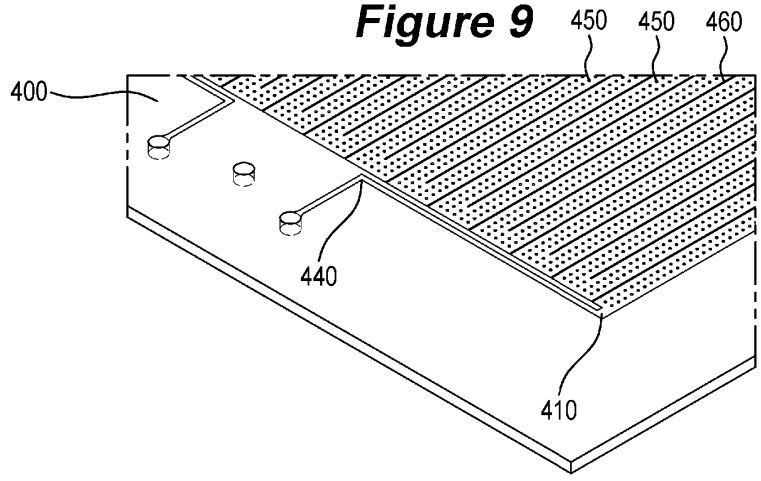

Figure 10

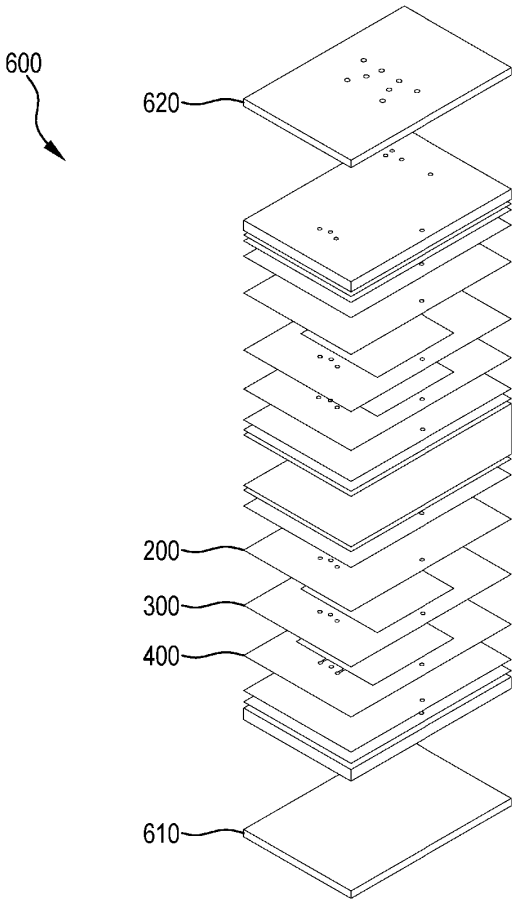

Figure 11A

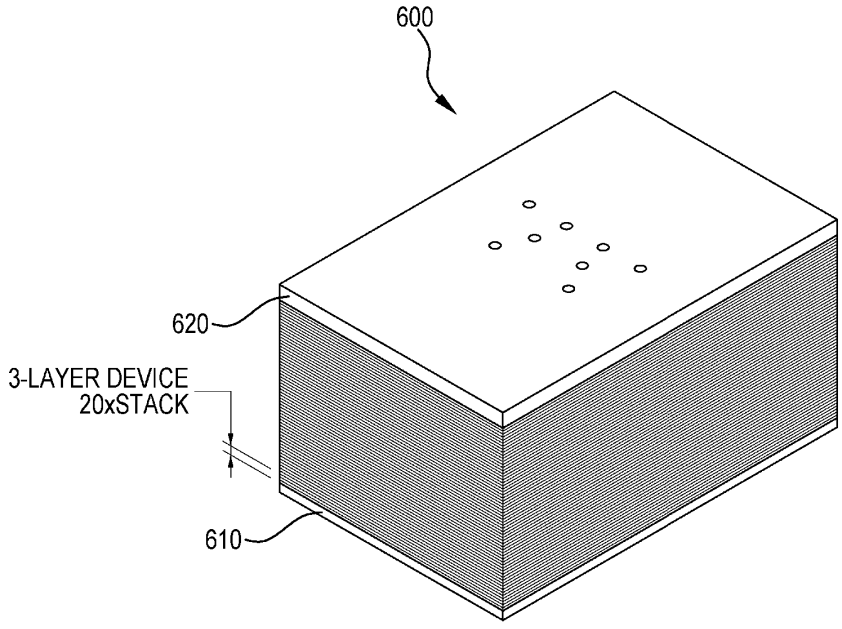

Figure 11B

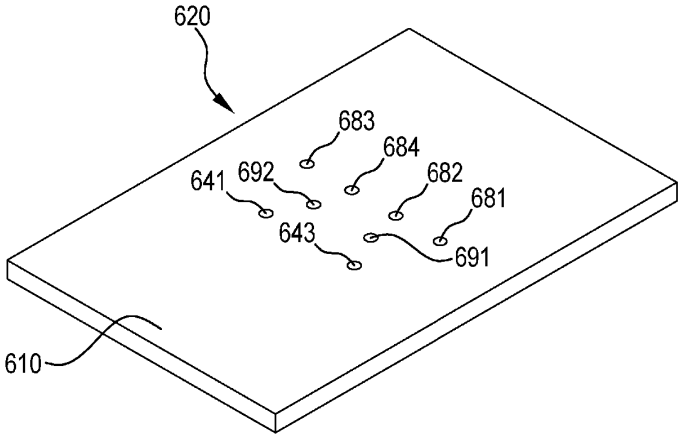

Figure 12A

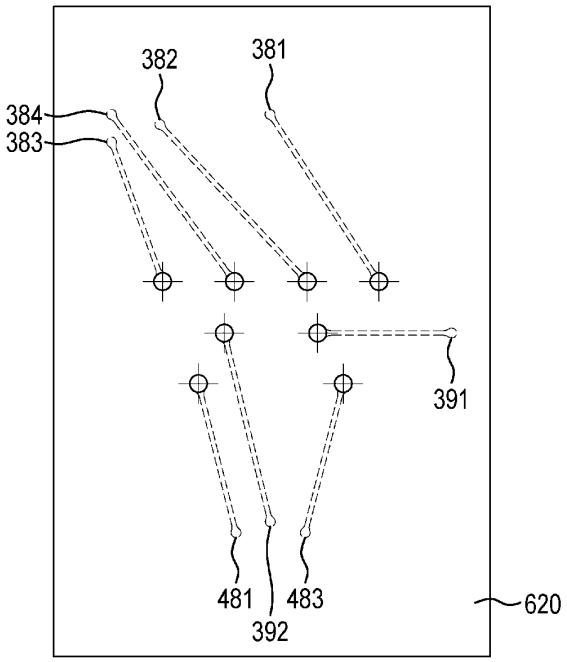

Figure 12B

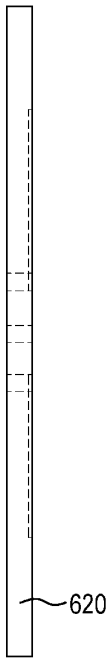

Figure 12C

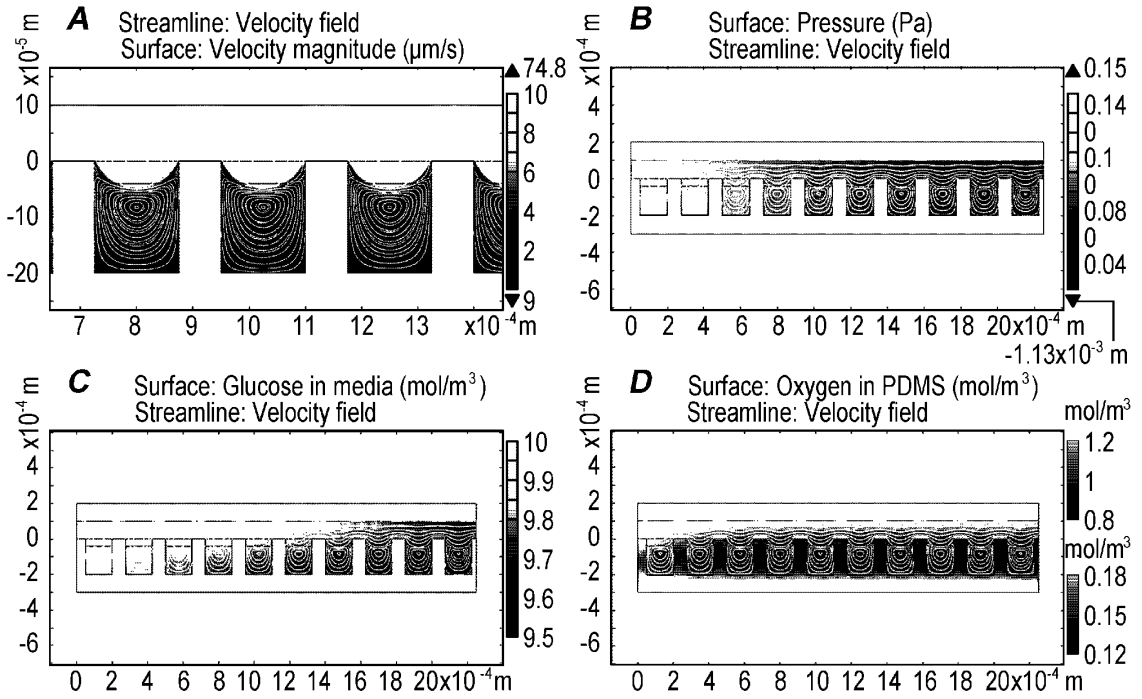

Figure 13

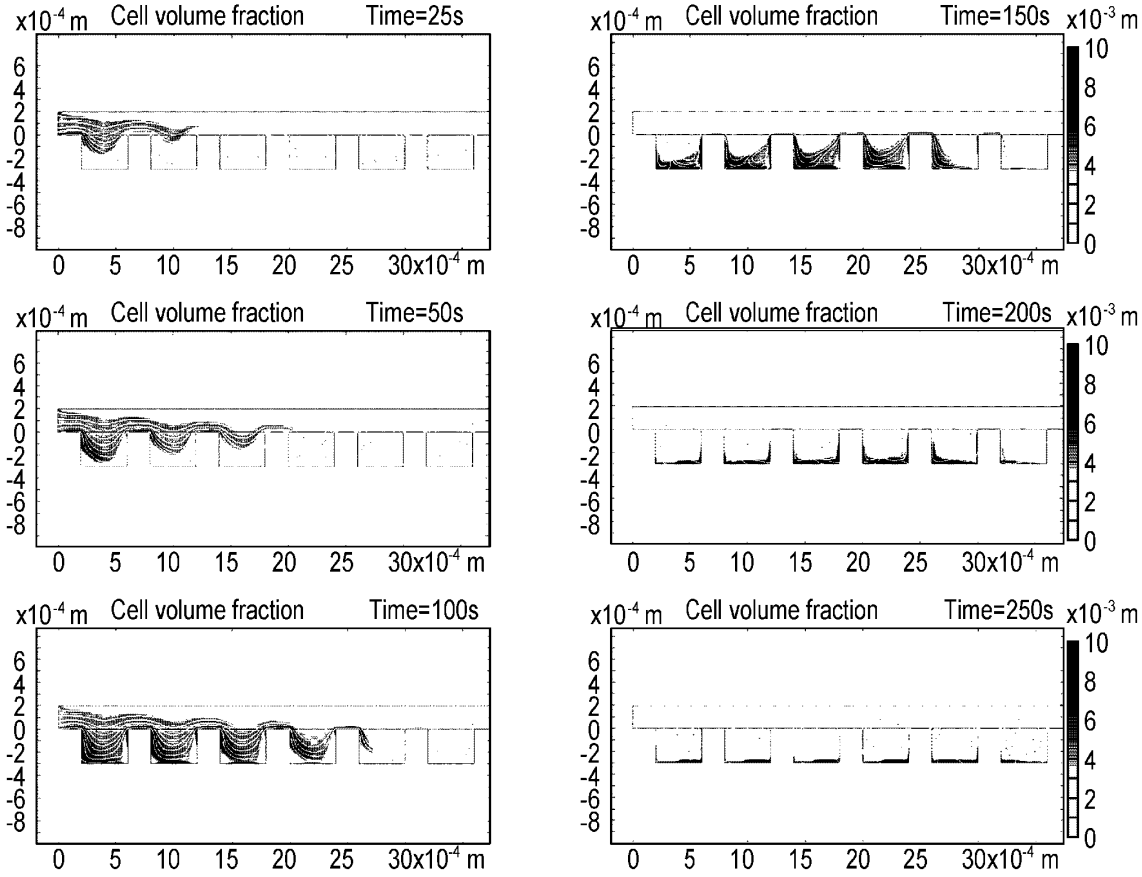

Figure 14

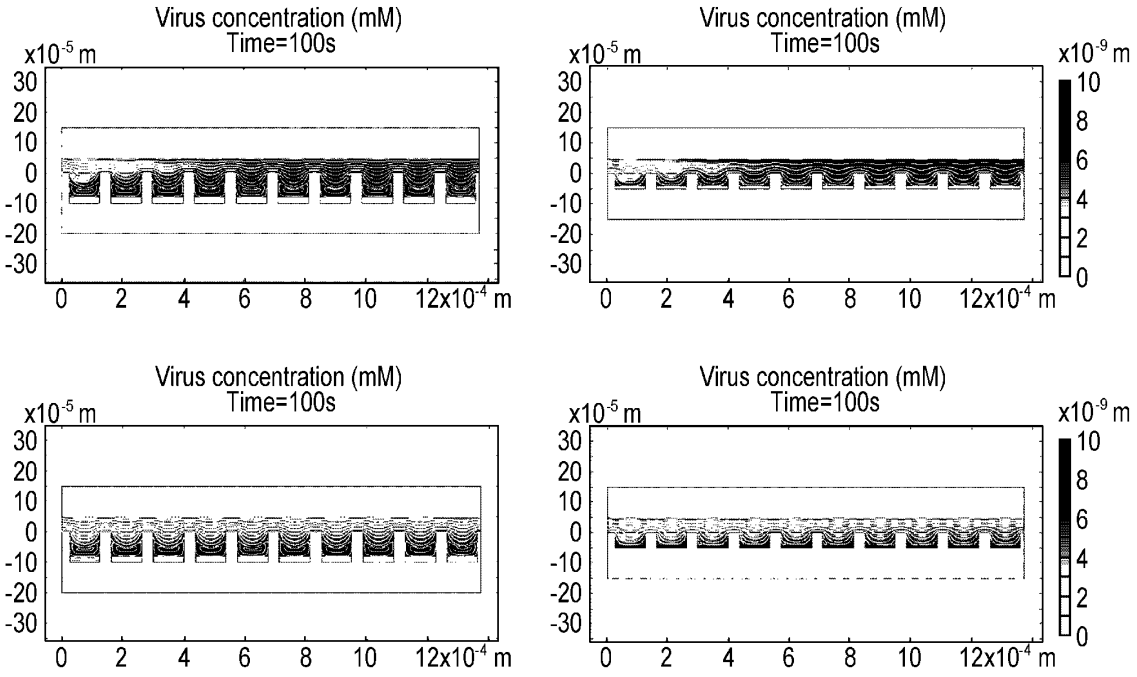

Figure 15

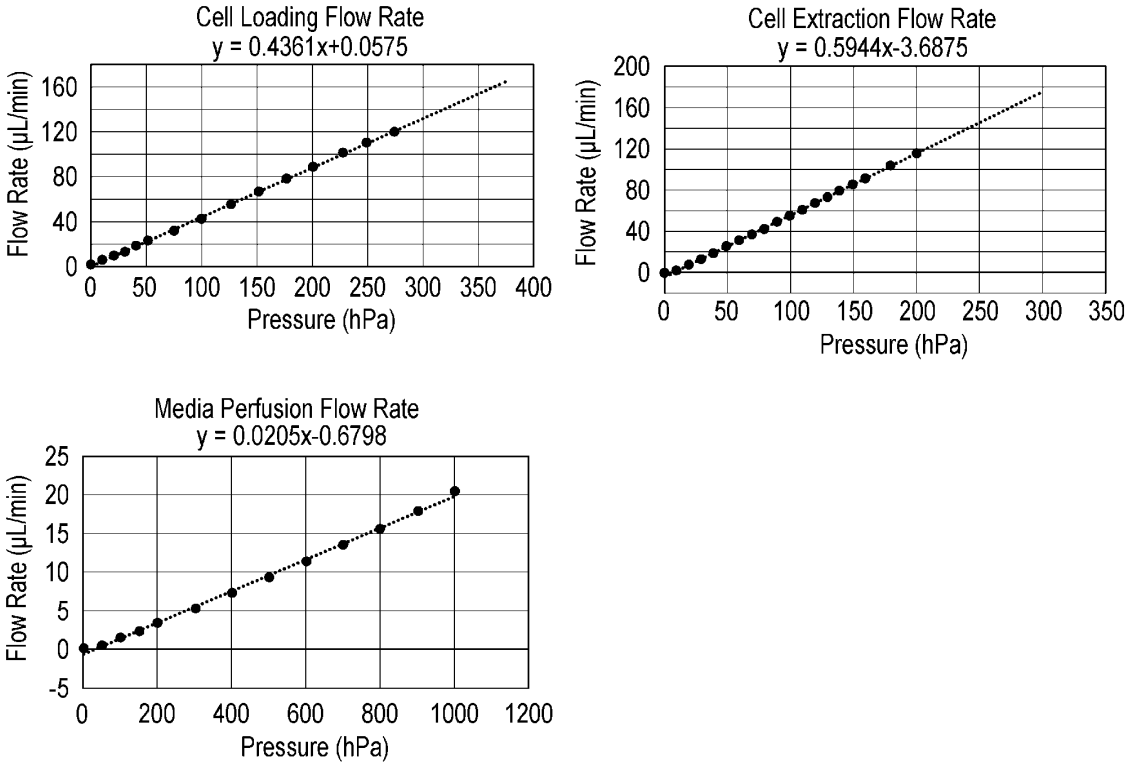

Figure 16

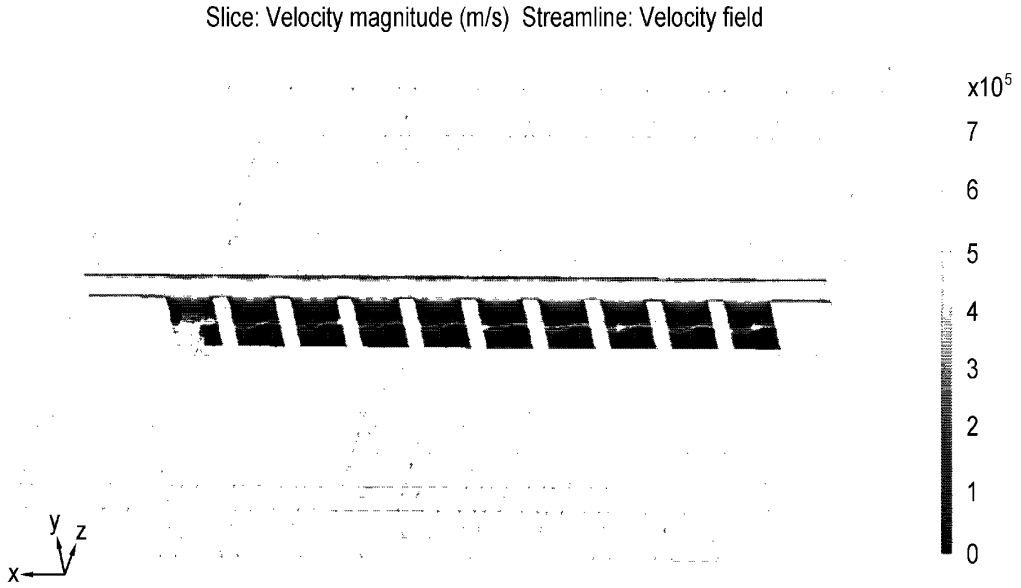

Figure 17A

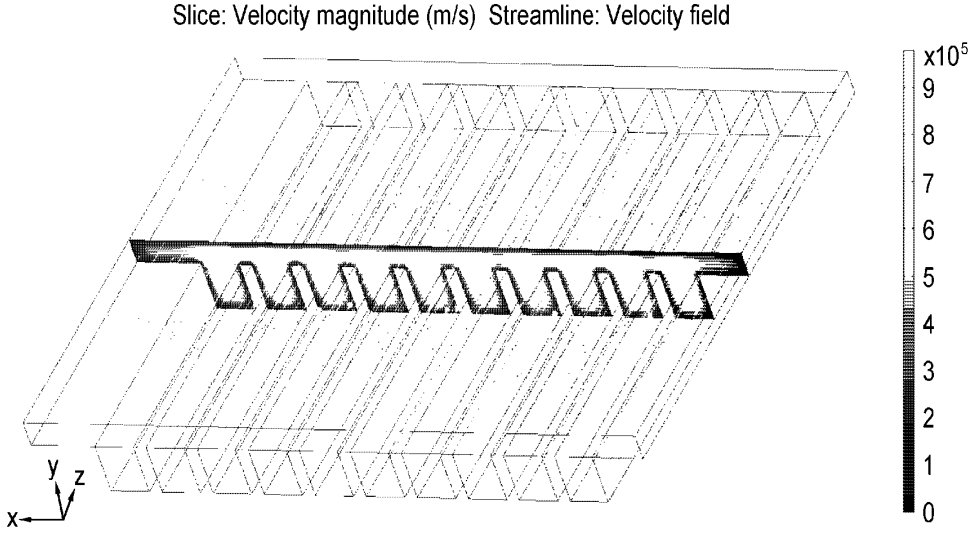

Figure 17B

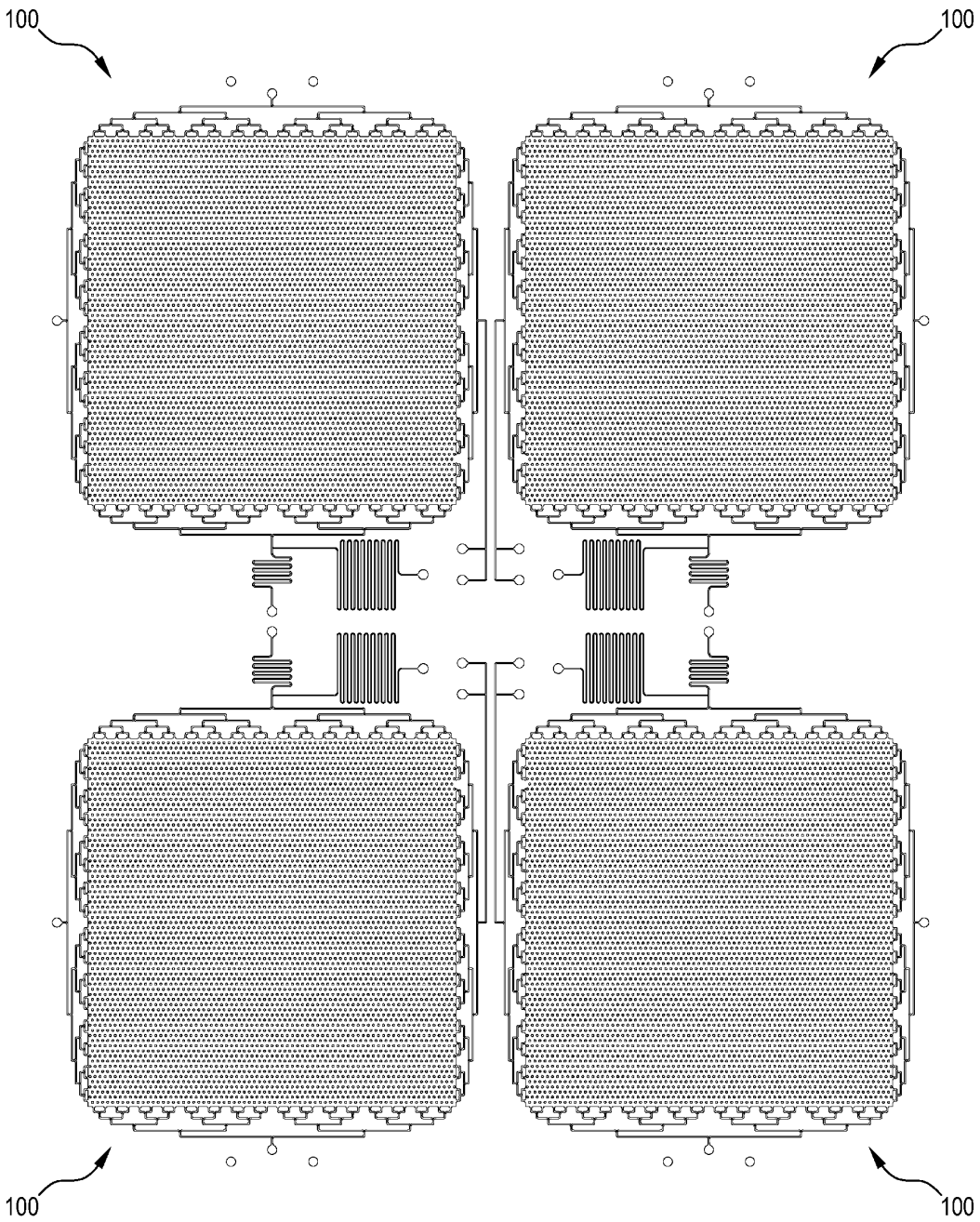

Figure 18

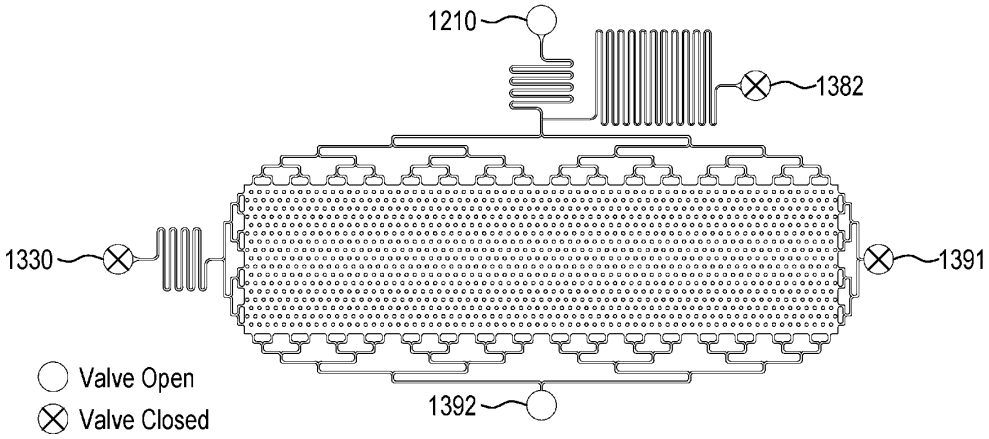

Figure 19A

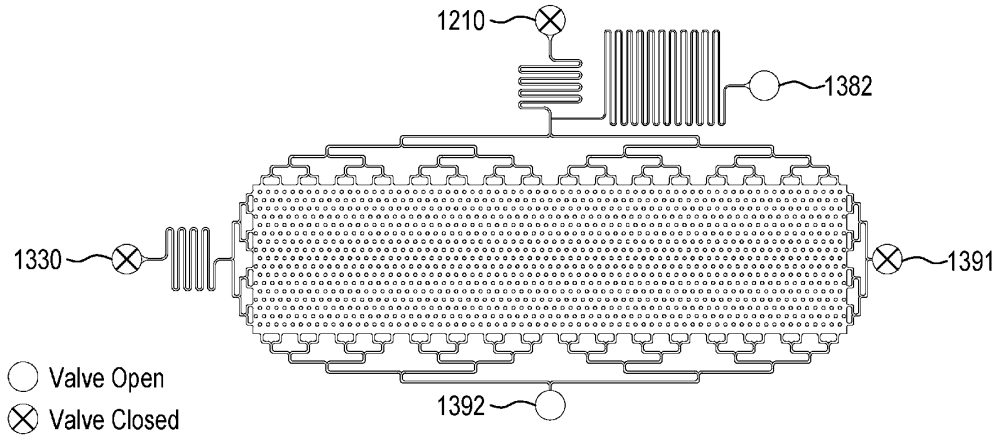

Figure 19B

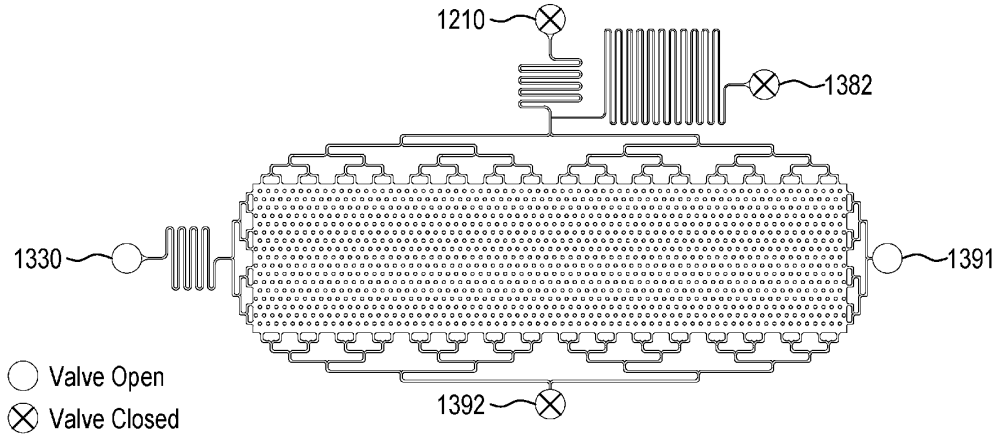

Figure 19C

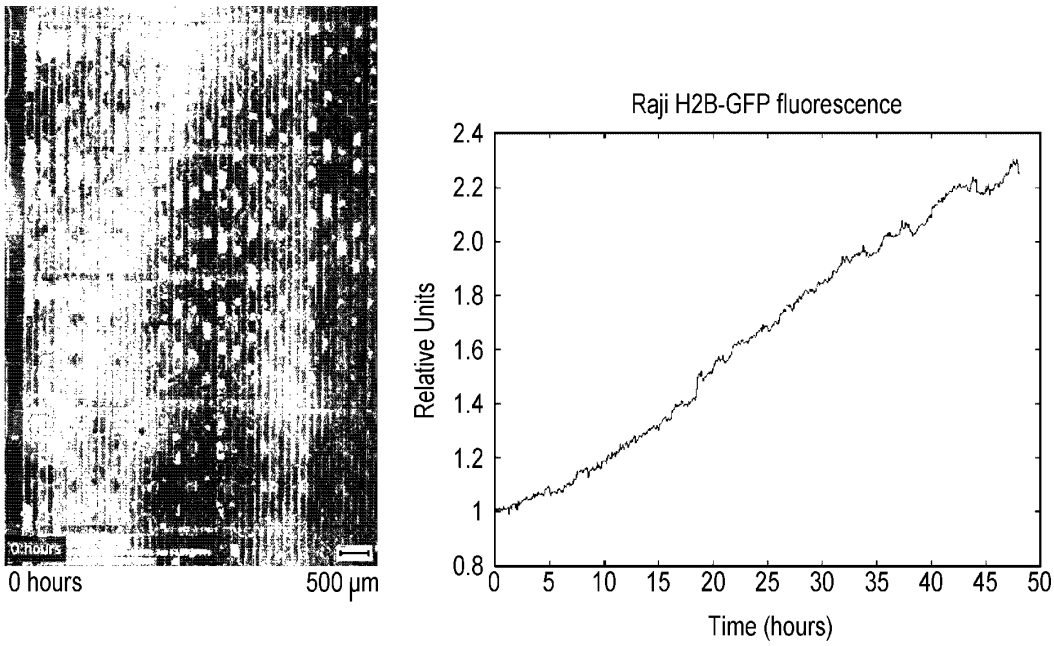

Figure 20

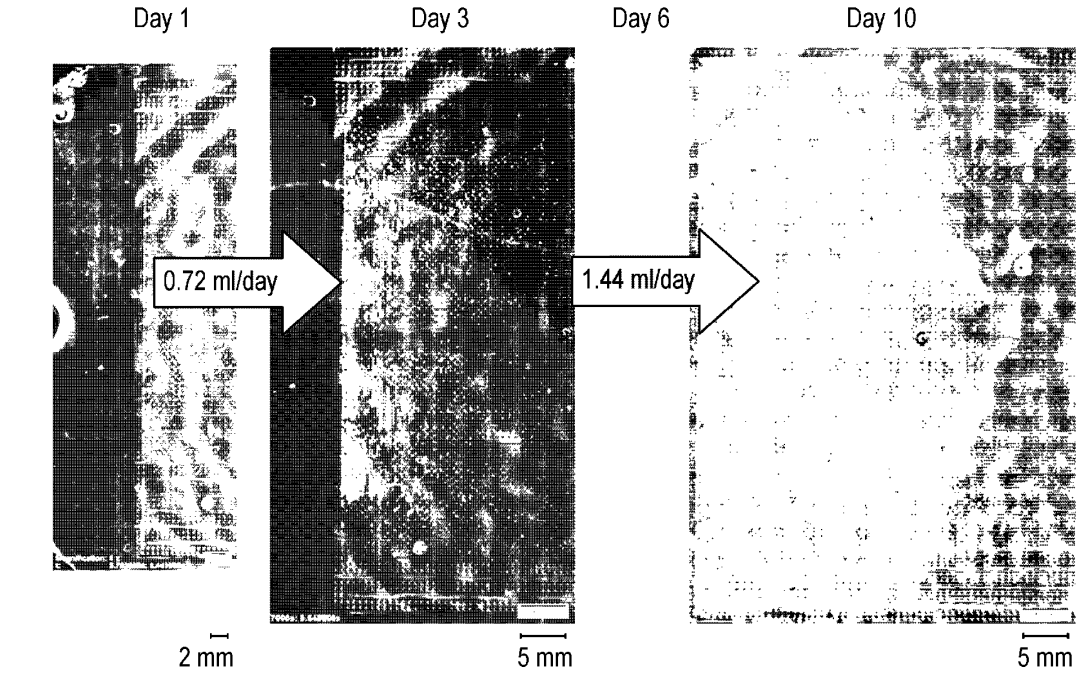

Magnification: 4 x
t: 5.763000s: 8.441000s

t: 7000s: 9.548000s

Magnification: 4 x
t: 6.920000s: 9.590000s

Figure 21

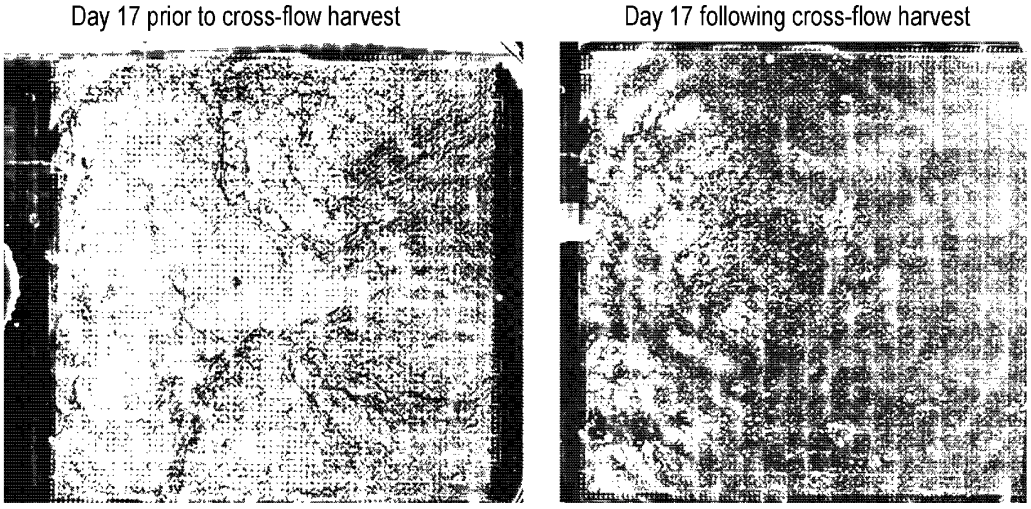

Figure 22

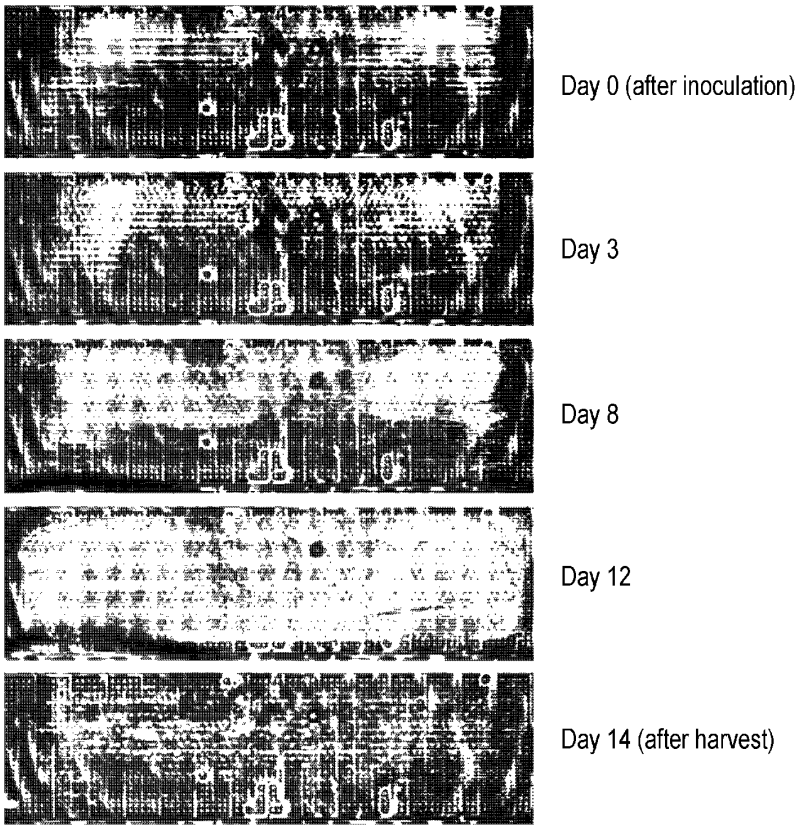

Figure 23

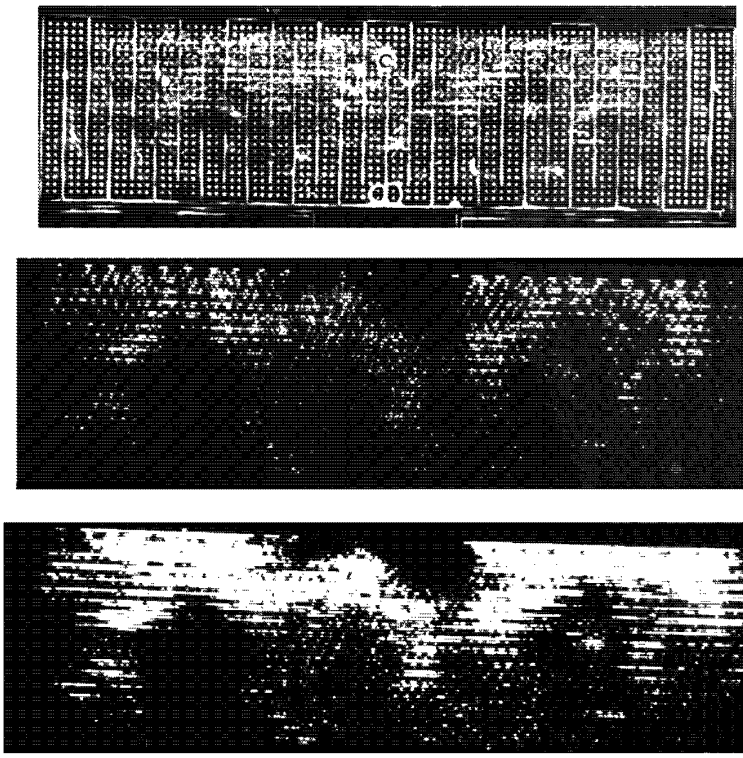

Figure 24

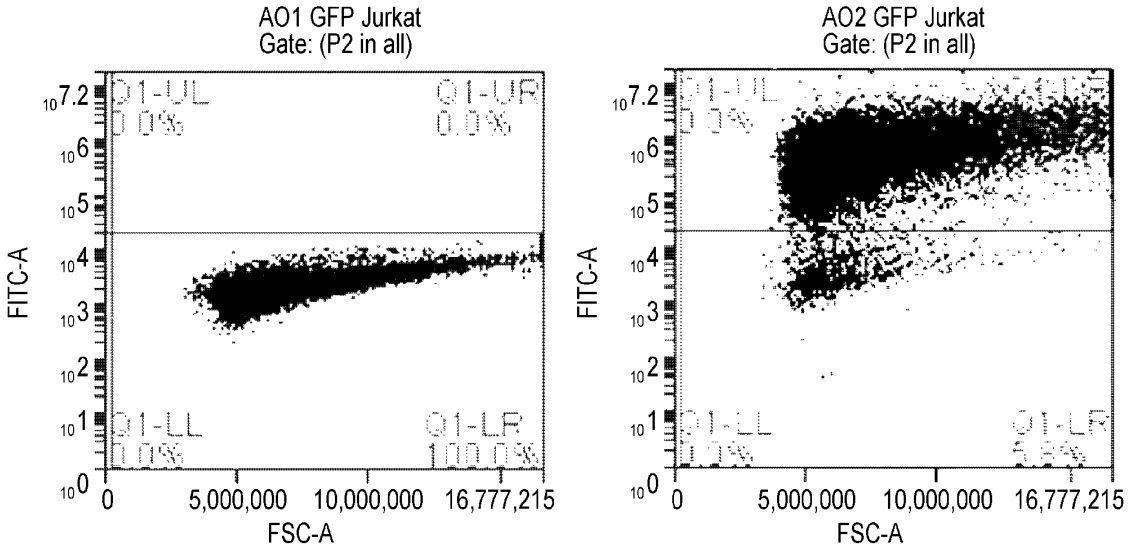

Figure 25

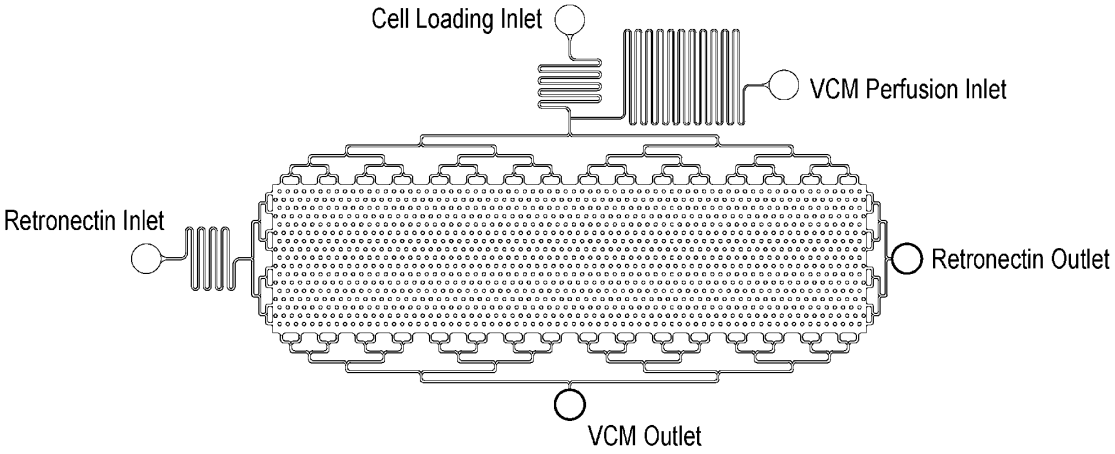

Figure 26

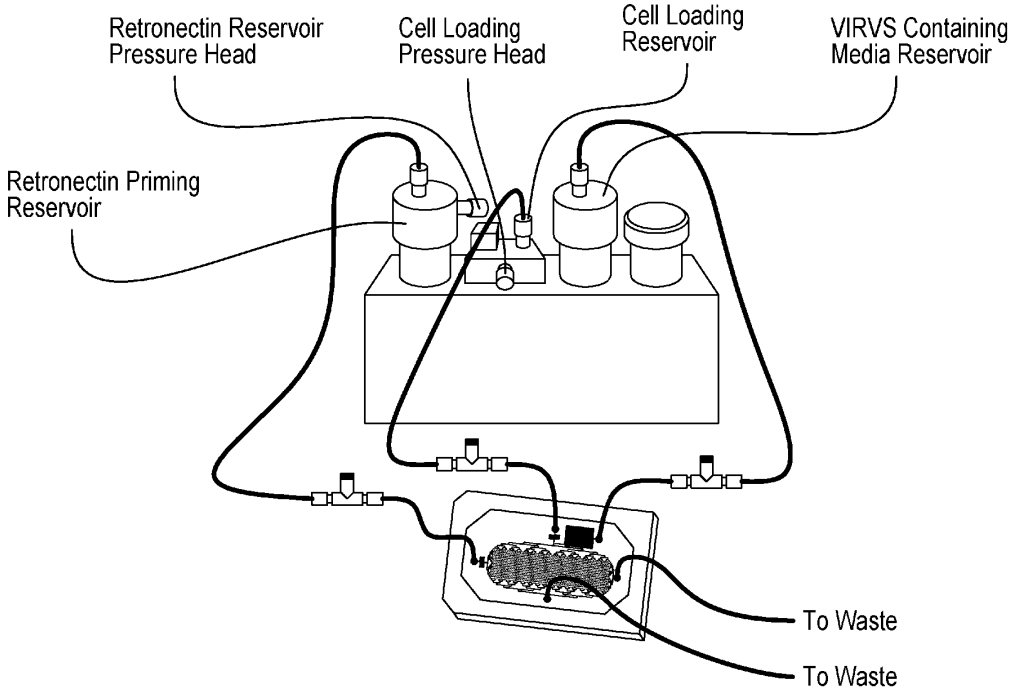

Figure 27

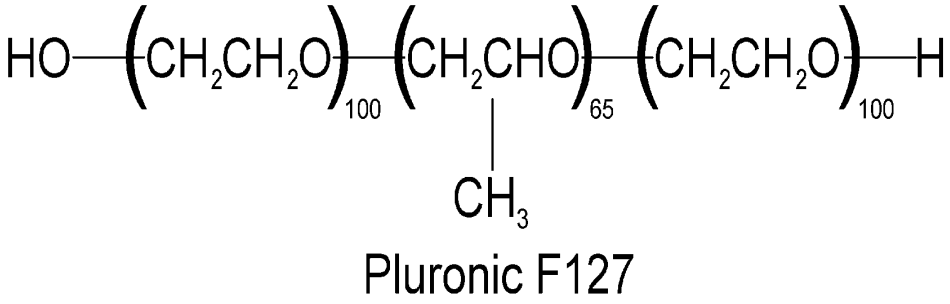

Pluronic F127

Figure 28

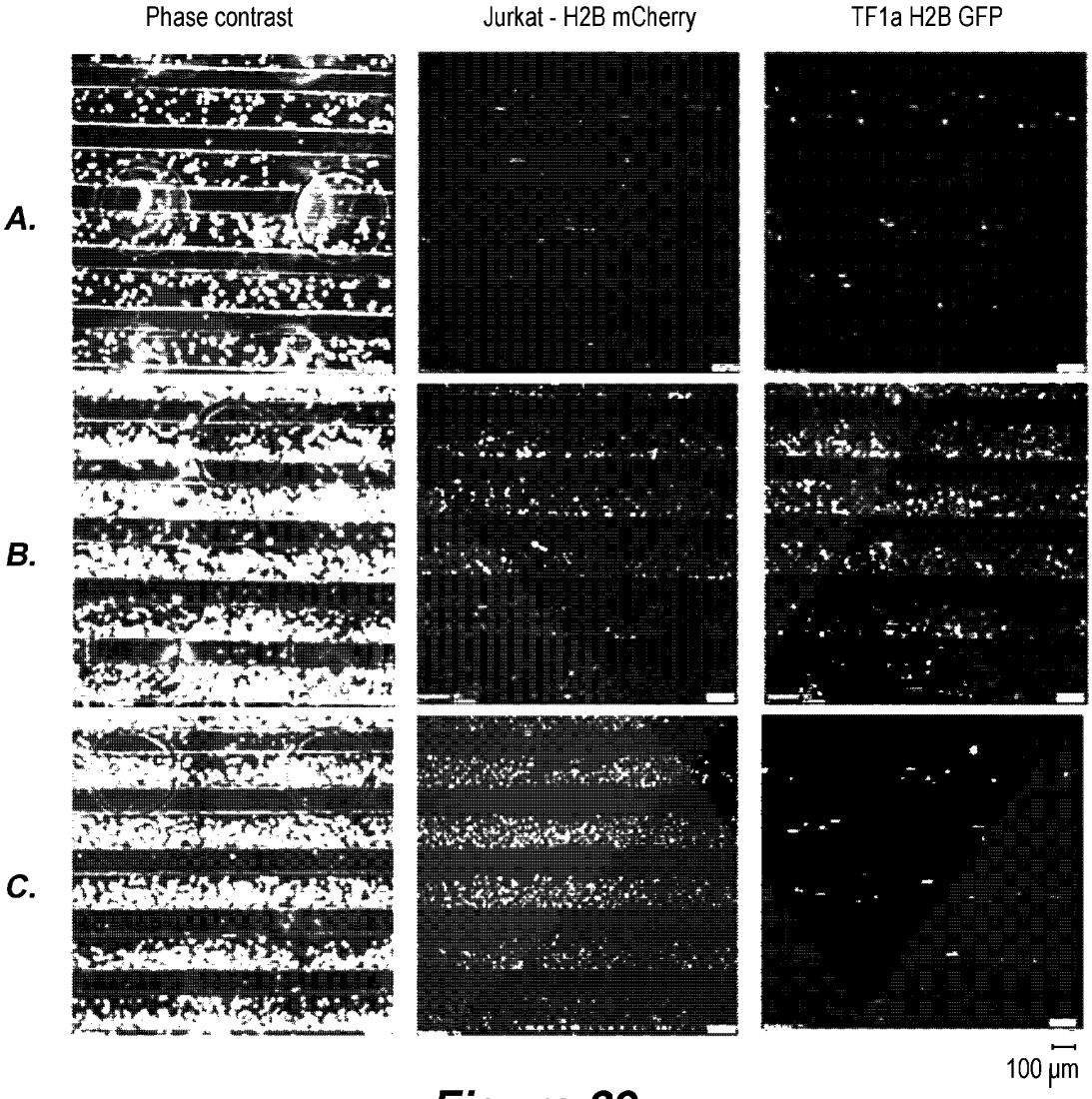

Figure 29

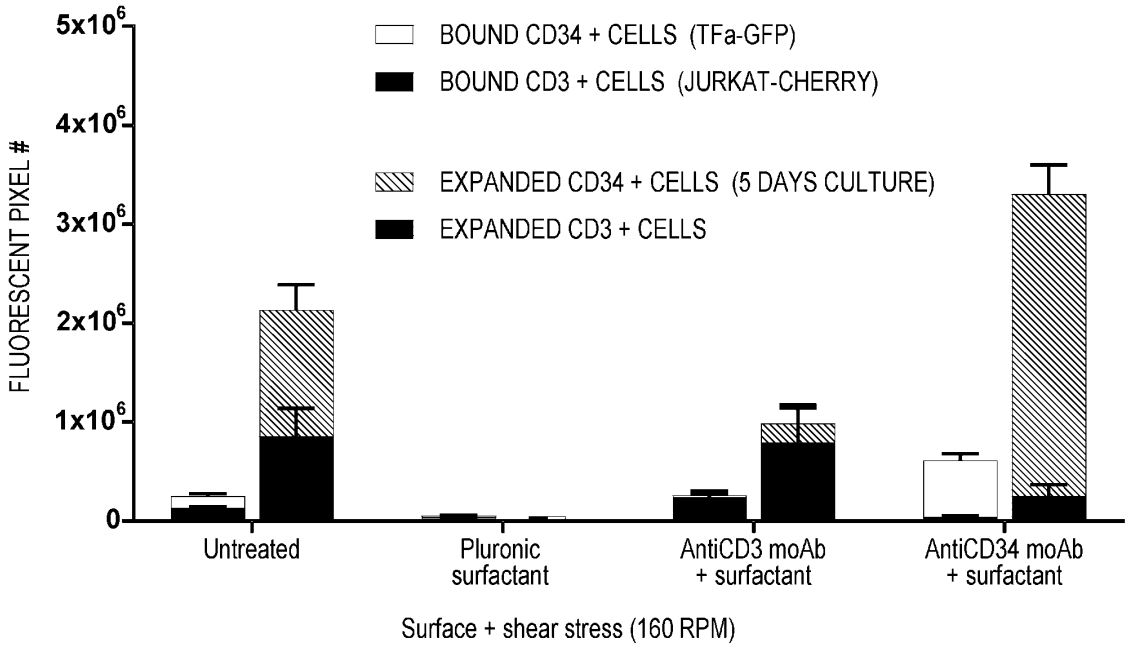

Figure 30

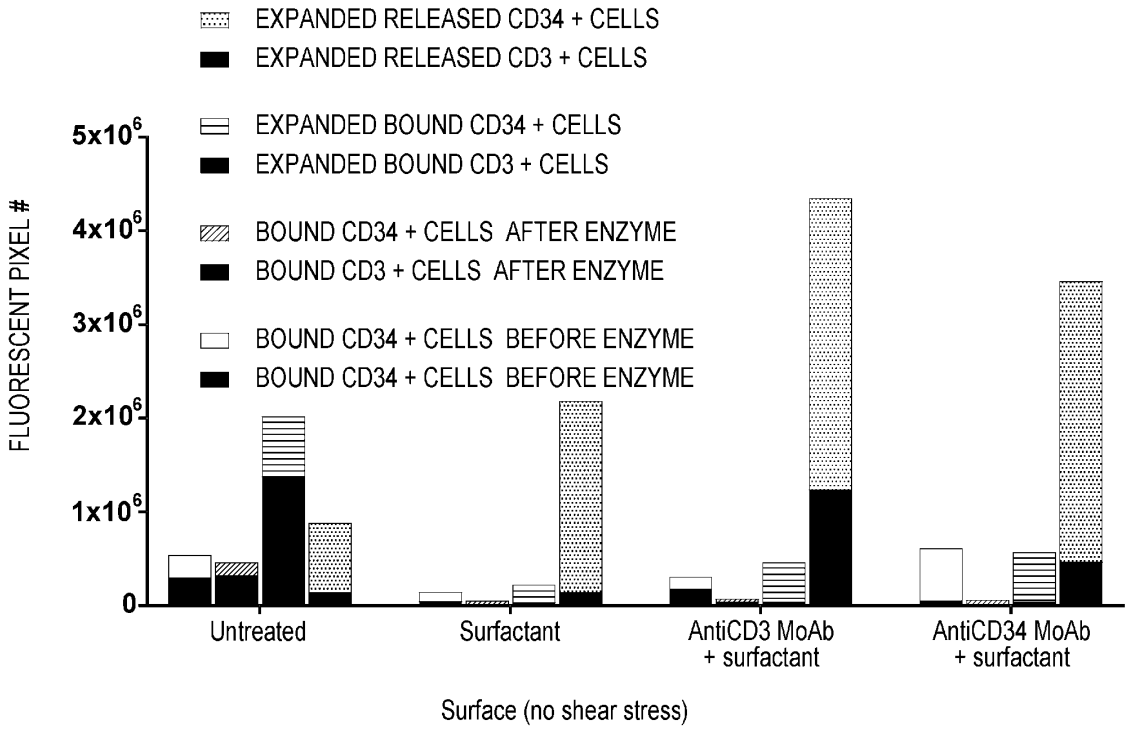

Figure 31