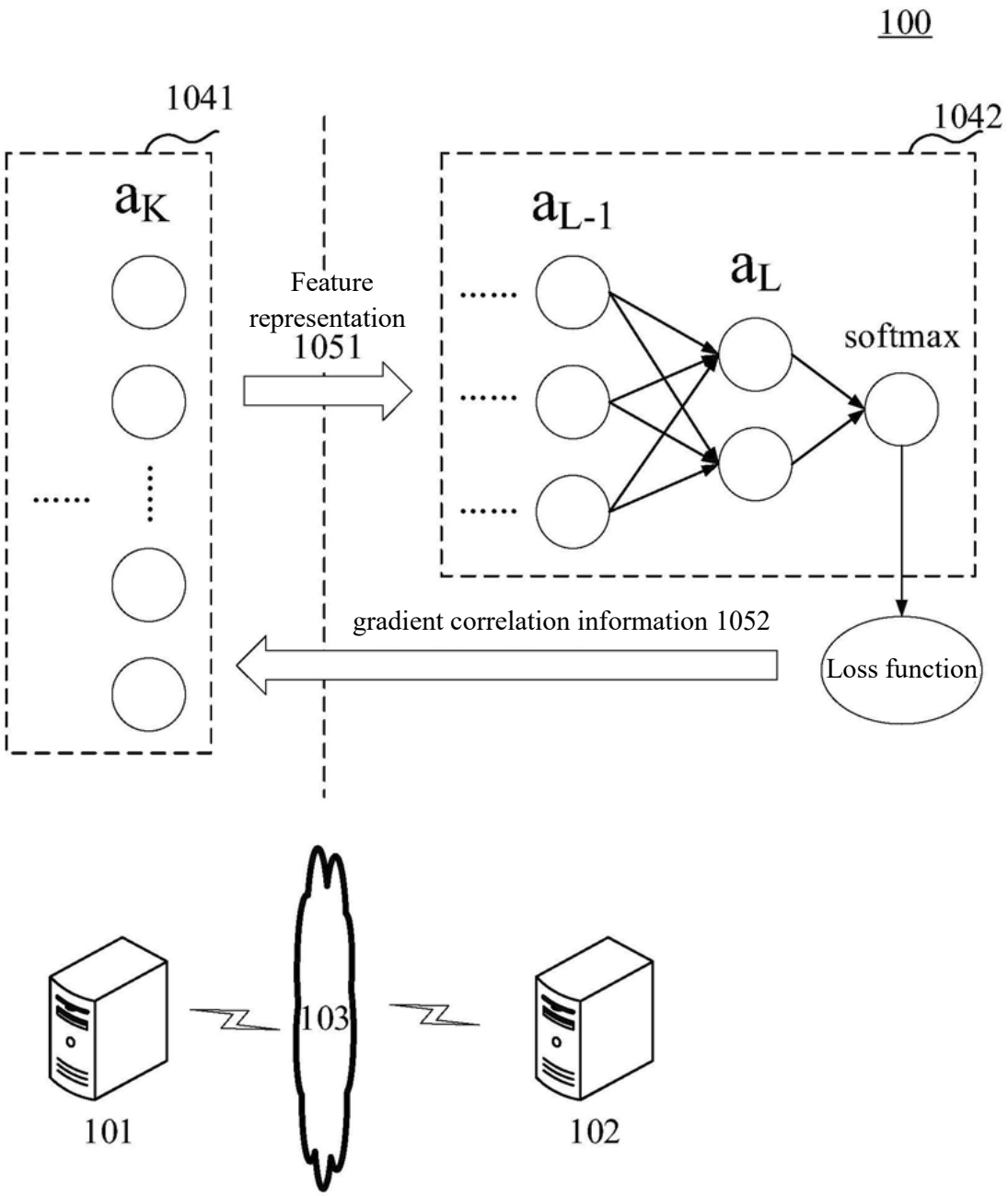
100
1041
1042
a_K
a_{L-1}
a_L
Feature representation 1051
softmax
gradient correlation information 1052
Loss function
103
101
102

FIG. 1

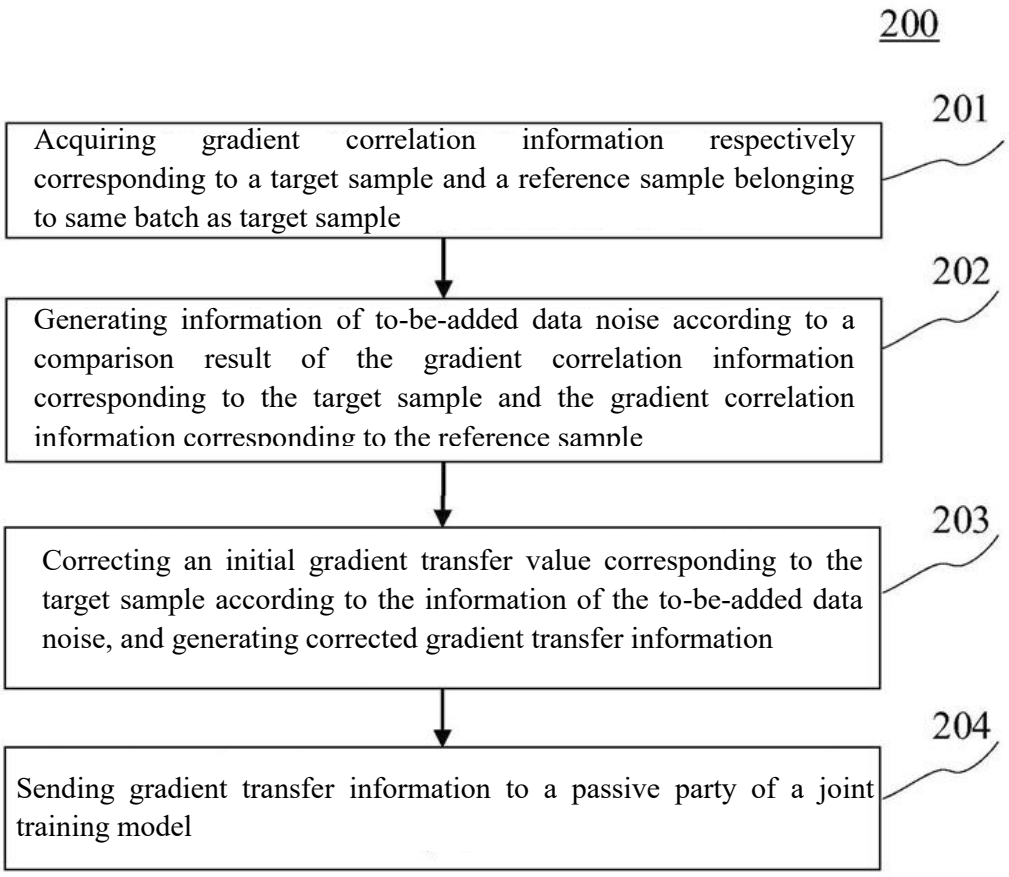
200
201
Acquiring gradient correlation information respectively corresponding to a target sample and a reference sample belonging to same batch as target sample
202
Generating information of to-be-added data noise according to a comparison result of the gradient correlation information corresponding to the target sample and the gradient correlation information corresponding to the reference sample
203
Correcting an initial gradient transfer value corresponding to the target sample according to the information of the to-be-added data noise, and generating corrected gradient transfer information
204
Sending gradient transfer information to a passive party of a joint training model

FIG. 2

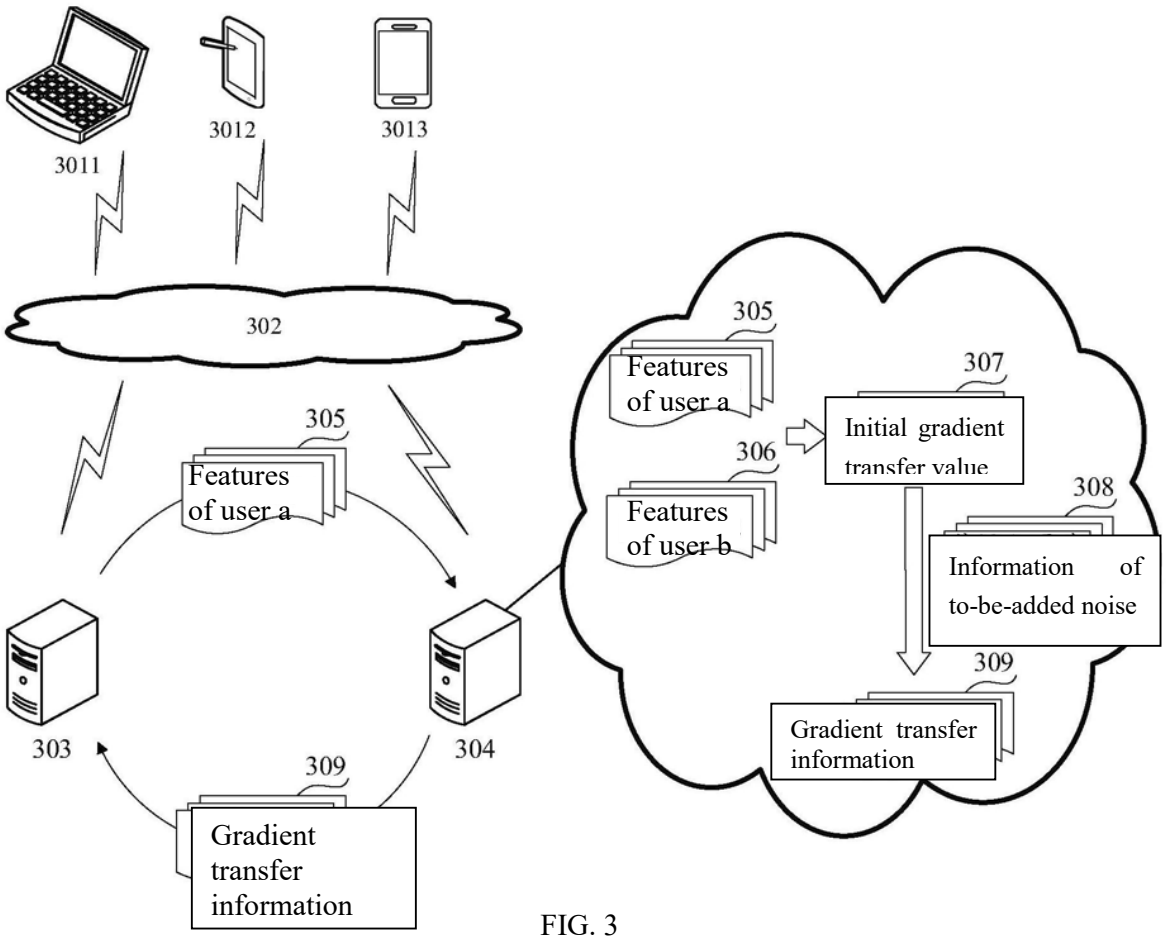
3011
3012
3013
302
305
Features of user a
303
304
309
Gradient transfer information
305
Features of user a
306
Features of user b
307
Initial gradient transfer value
308
Information of to-be-added noise
309
Gradient transfer information

FIG. 3

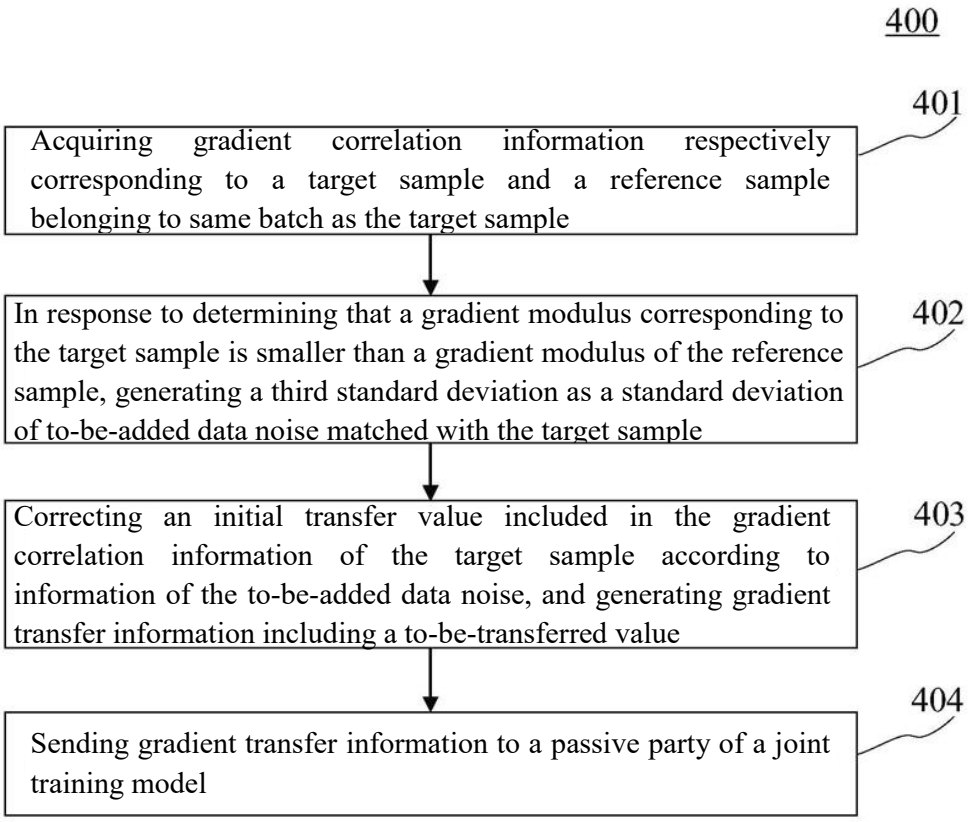
400
401
Acquiring gradient correlation information respectively corresponding to a target sample and a reference sample belonging to same batch as the target sample
402
In response to determining that a gradient modulus corresponding to the target sample is smaller than a gradient modulus of the reference sample, generating a third standard deviation as a standard deviation of to-be-added data noise matched with the target sample
403
Correcting an initial transfer value included in the gradient correlation information of the target sample according to information of the to-be-added data noise, and generating gradient transfer information including a to-be-transferred value
404
Sending gradient transfer information to a passive party of a joint training model

FIG. 4

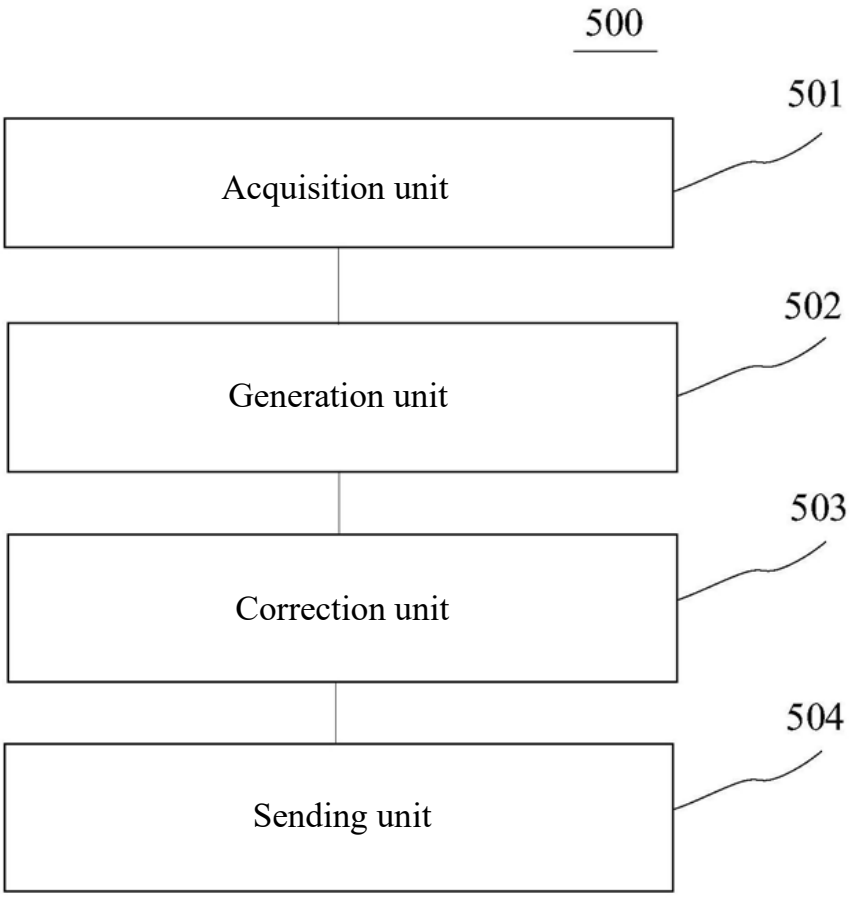
500
501
Acquisition unit
502
Generation unit
503
Correction unit
504
Sending unit

FIG. 5

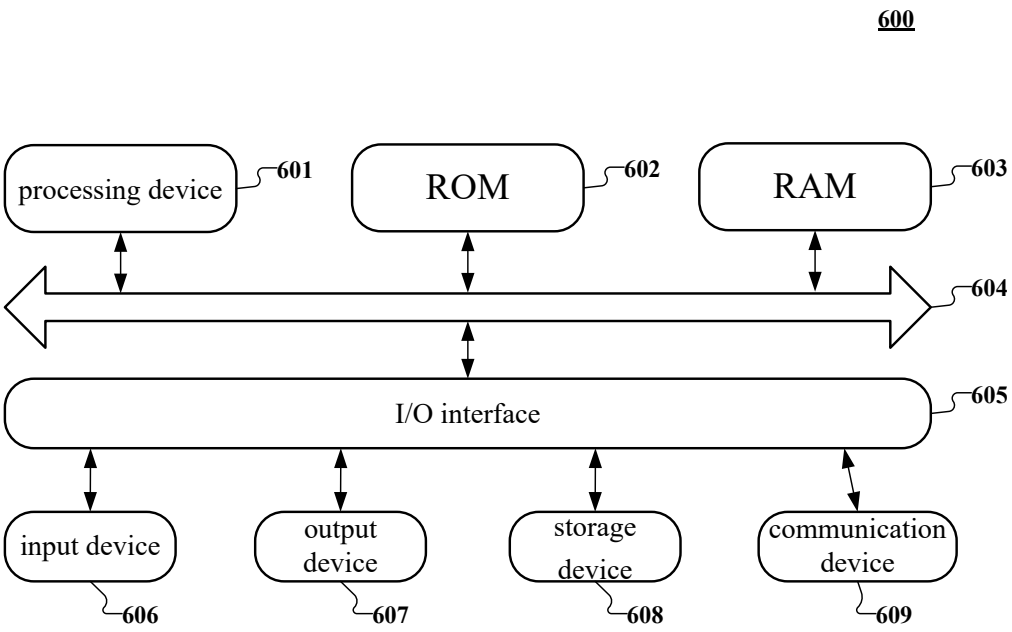
600
processing device
601
ROM
602
RAM
603
604
I/O interface
605
input device
606
output device
607
storage device
608
communication device
609

FIG. 6