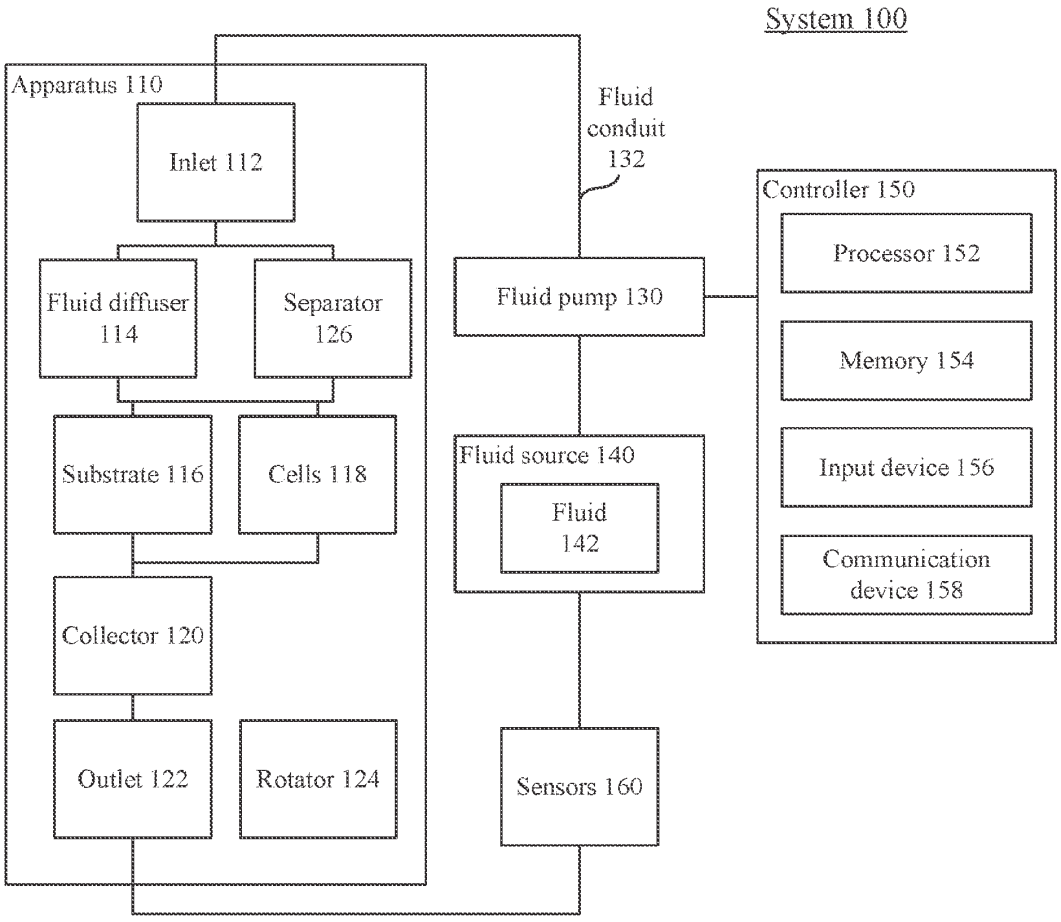
System 100
Apparatus 110
Inlet 112
Fluid diffuser 114
Separator 126
Substrate 116
Cells 118
Collector 120
Outlet 122
Rotator 124
Fluid conduit 132
Fluid pump 130
Fluid source 140
Fluid 142
Sensors 160
Controller 150
Processor 152
Memory 154
Input device 156
Communication device 158

FIG. 1

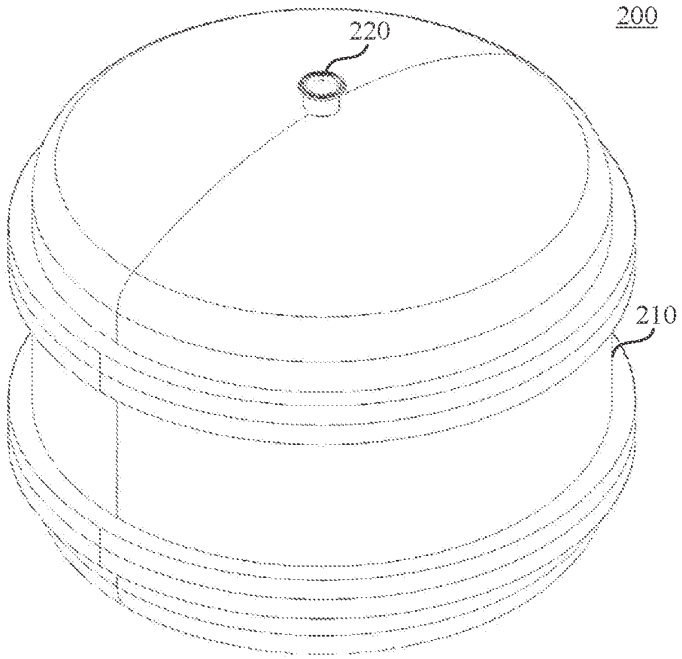

FIG. 2A

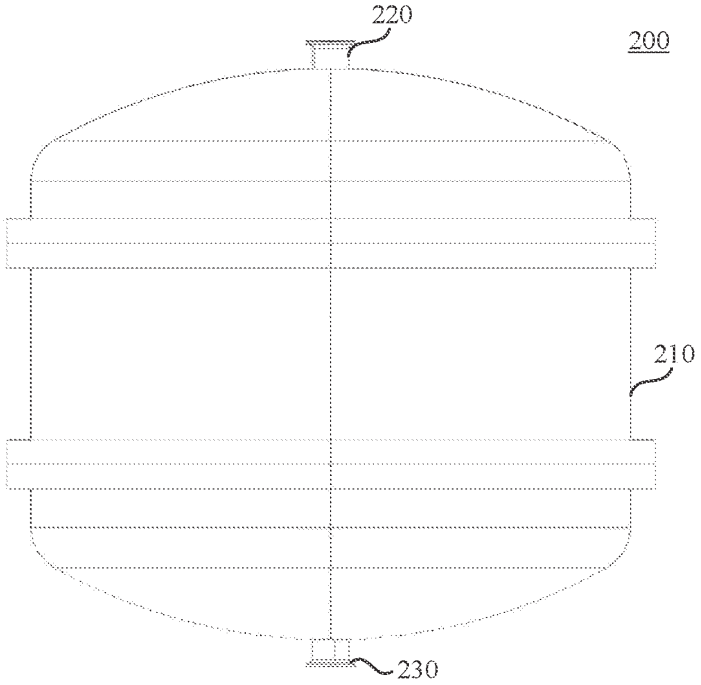

FIG. 2B

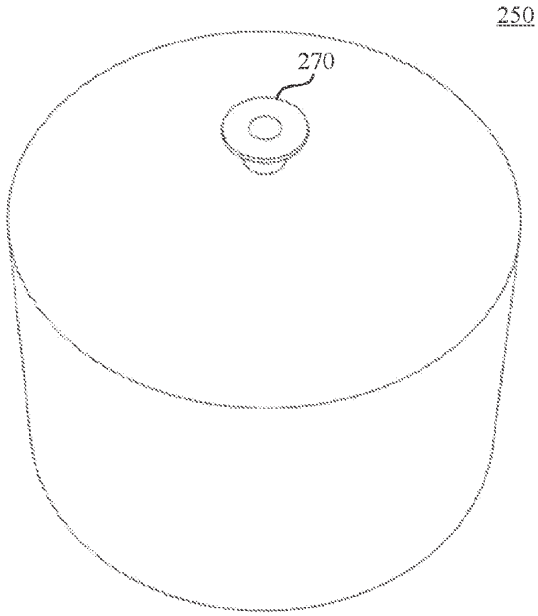

FIG. 2C

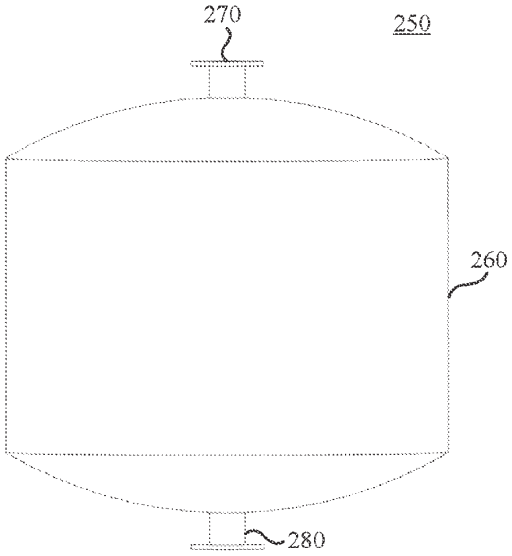

FIG. 2D

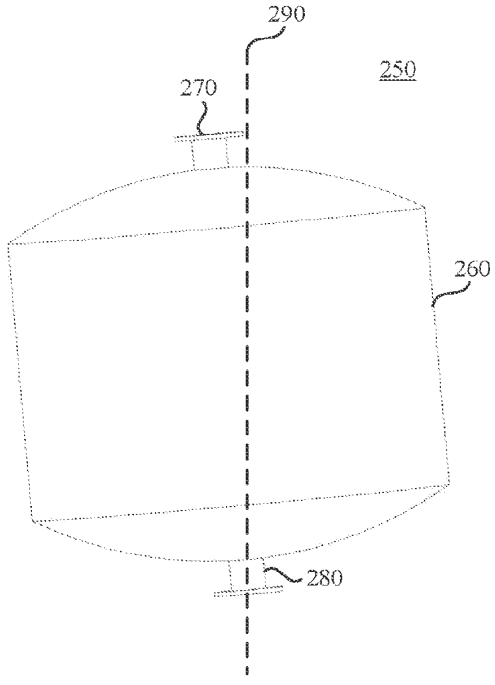

FIG. 2E

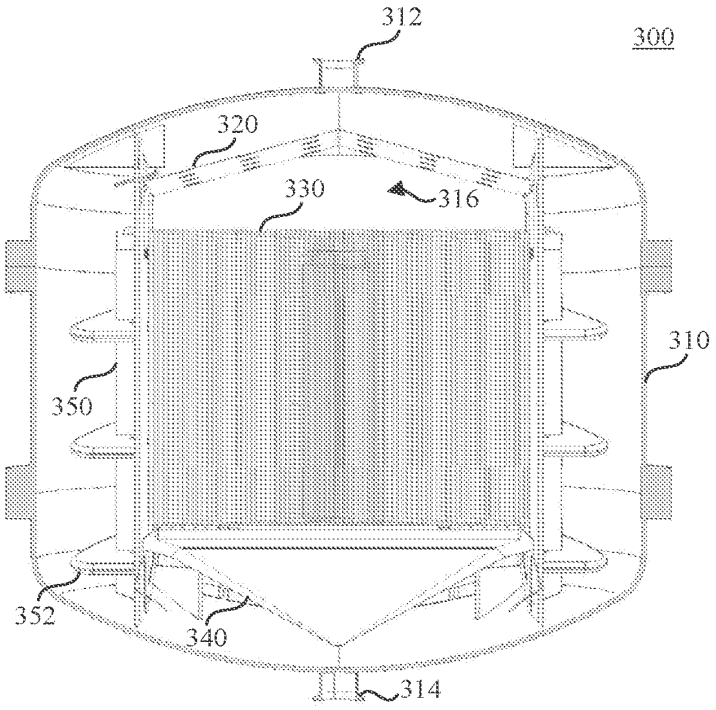

FIG. 3A

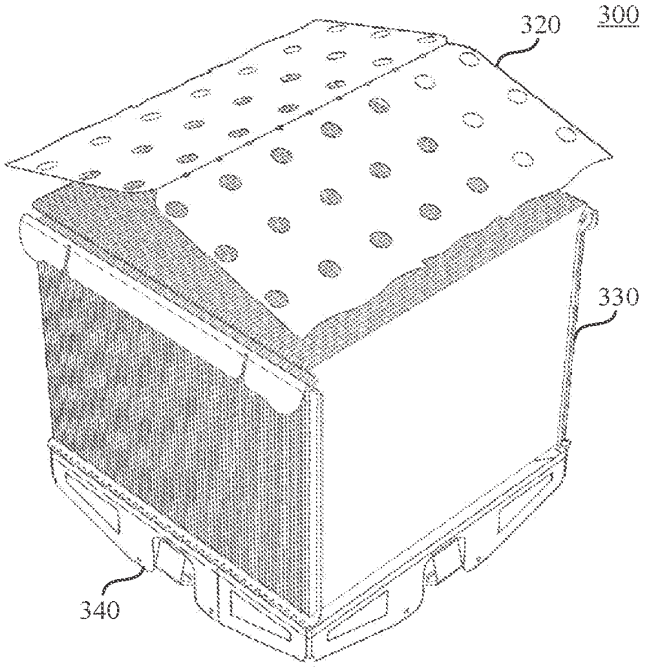

FIG. 3B

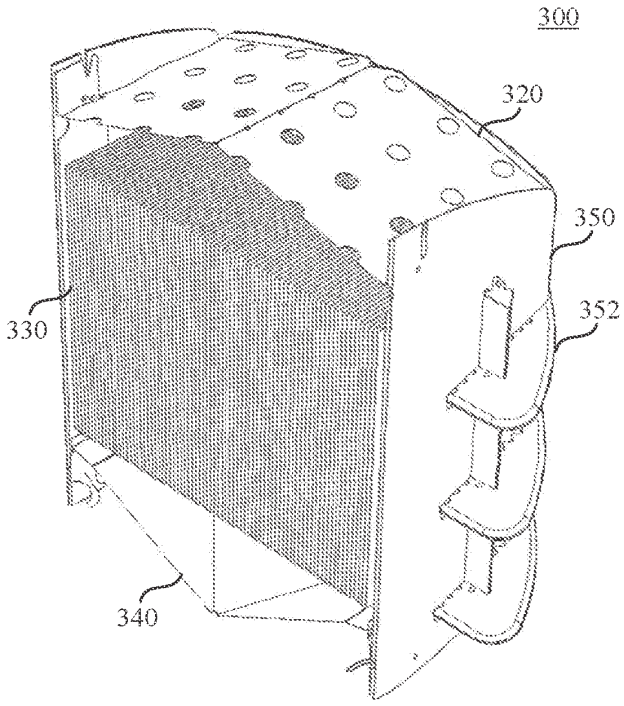

FIG. 3C

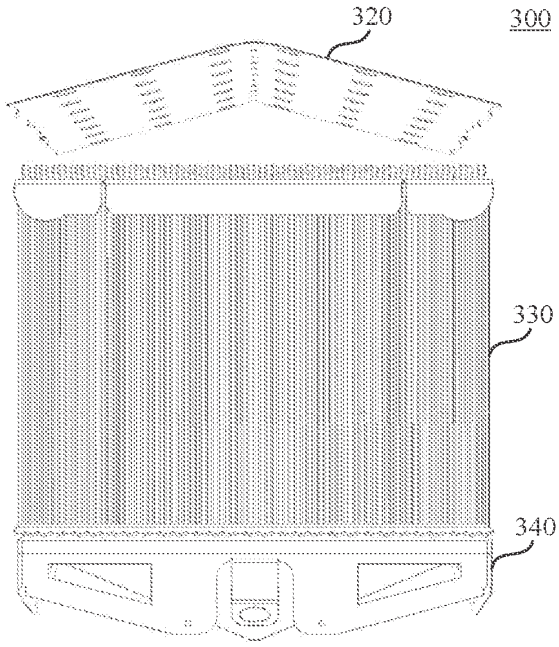

FIG. 3D

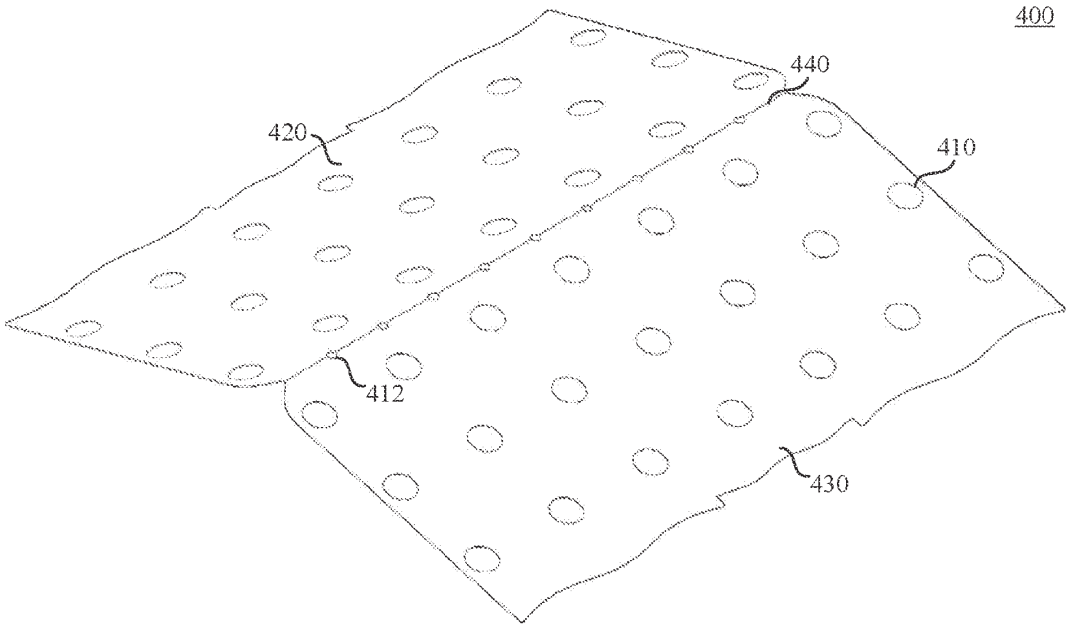

FIG. 4A

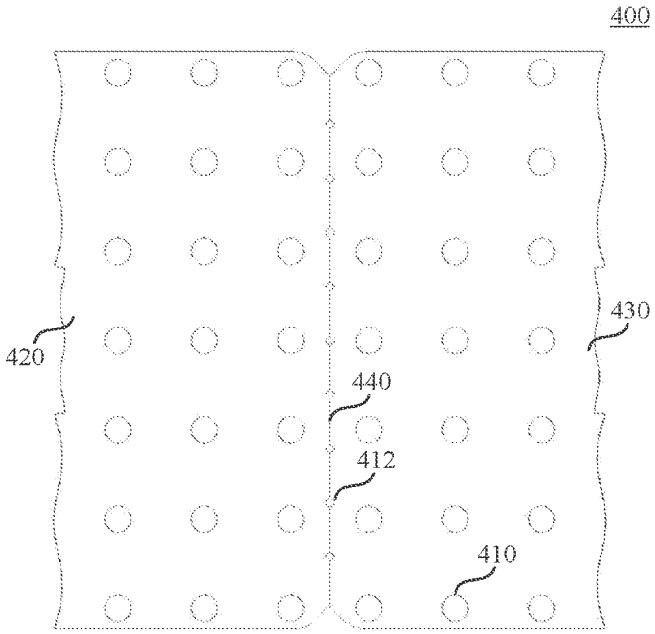

FIG. 4B

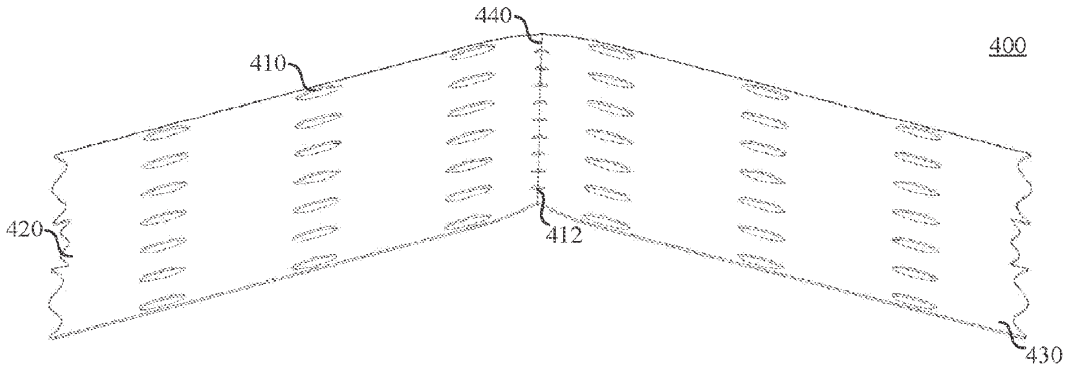

FIG. 4C

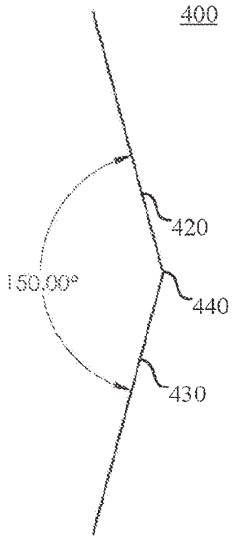

FIG. 4D

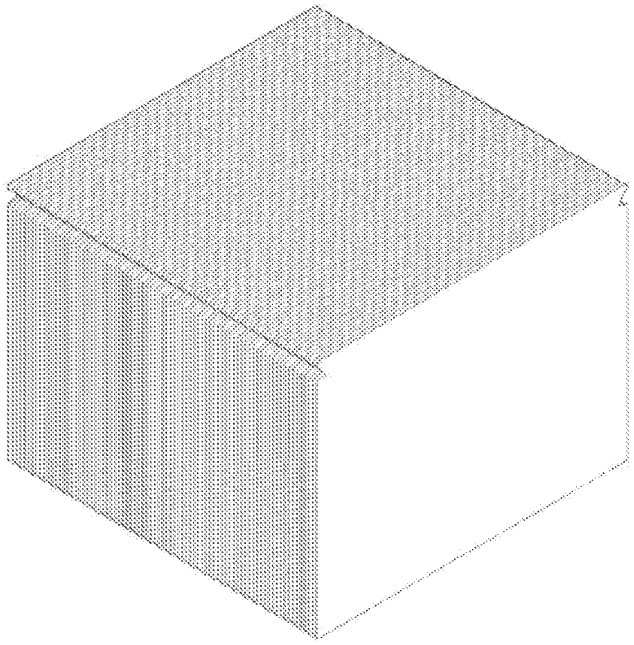

FIG. 5A

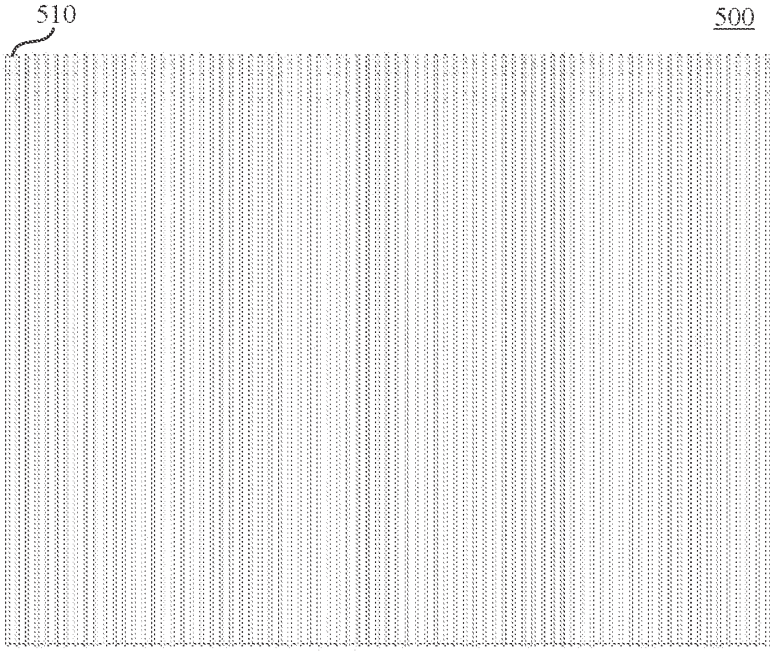

FIG. 5B

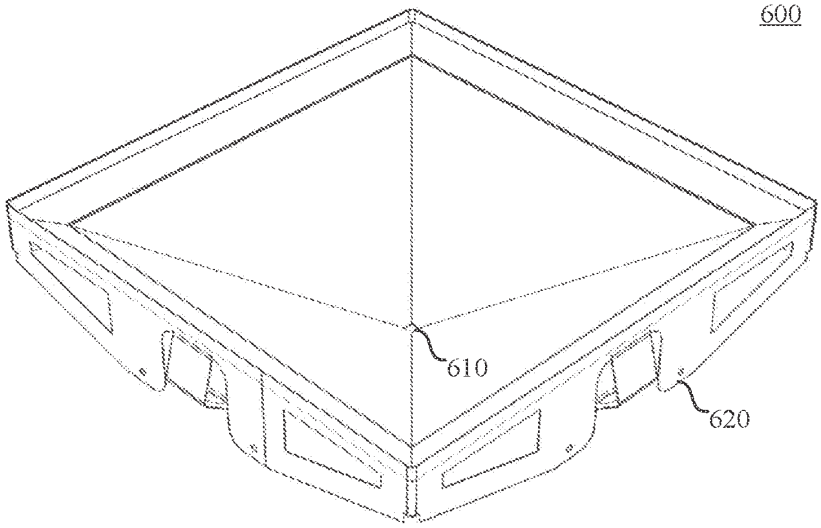

FIG. 6A

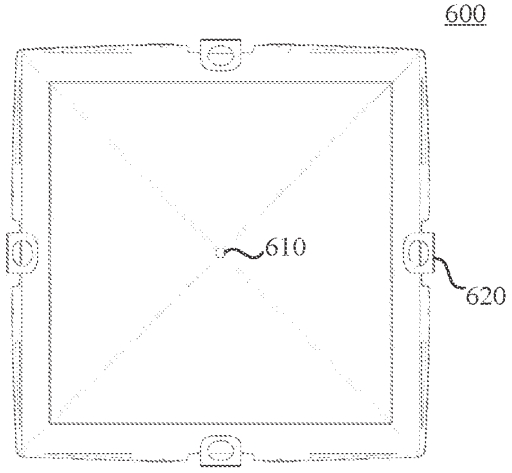

FIG. 6B

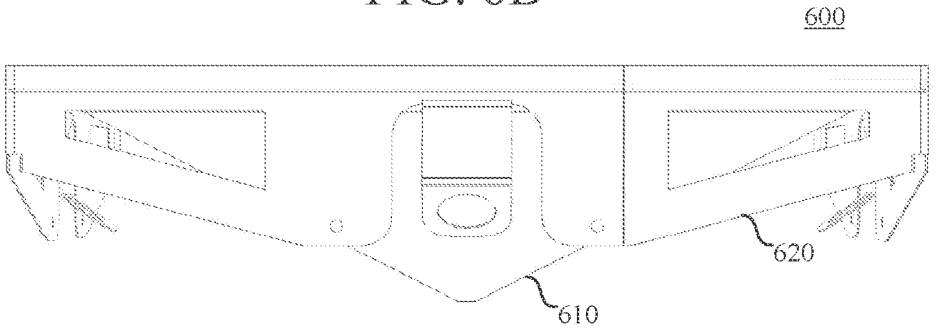

FIG. 6C

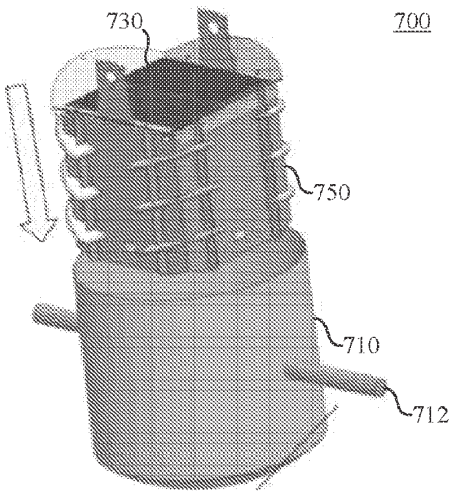

FIG. 7A

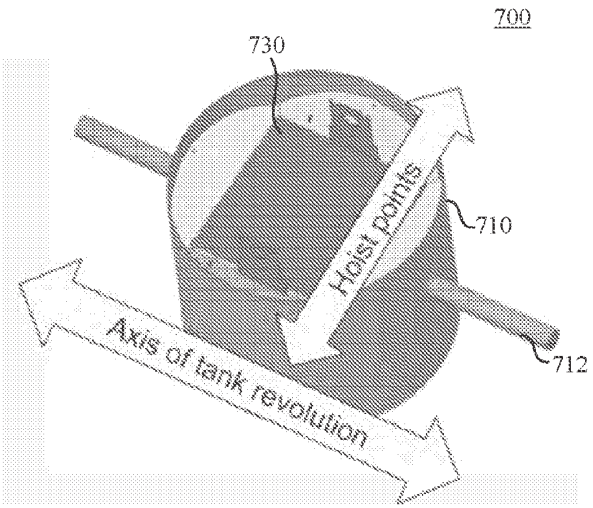

FIG. 7B

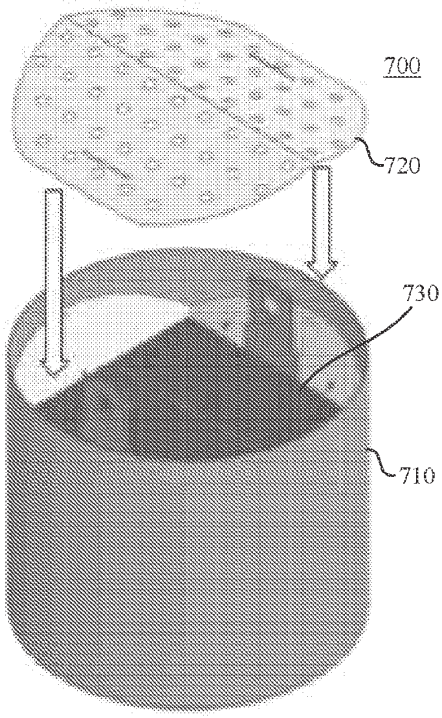

FIG. 7C

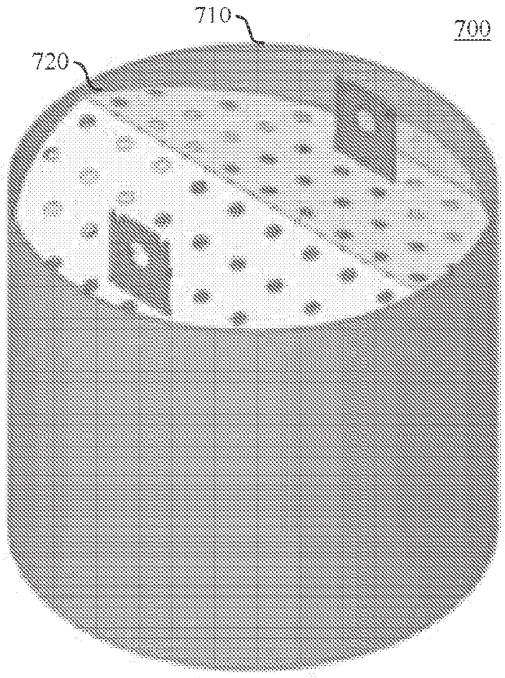

FIG. 7D

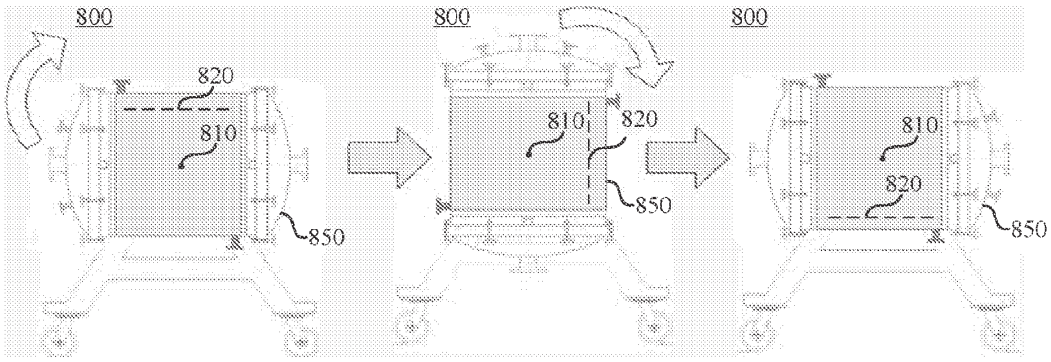

FIG. 8A FIG. 8B FIG. 8C

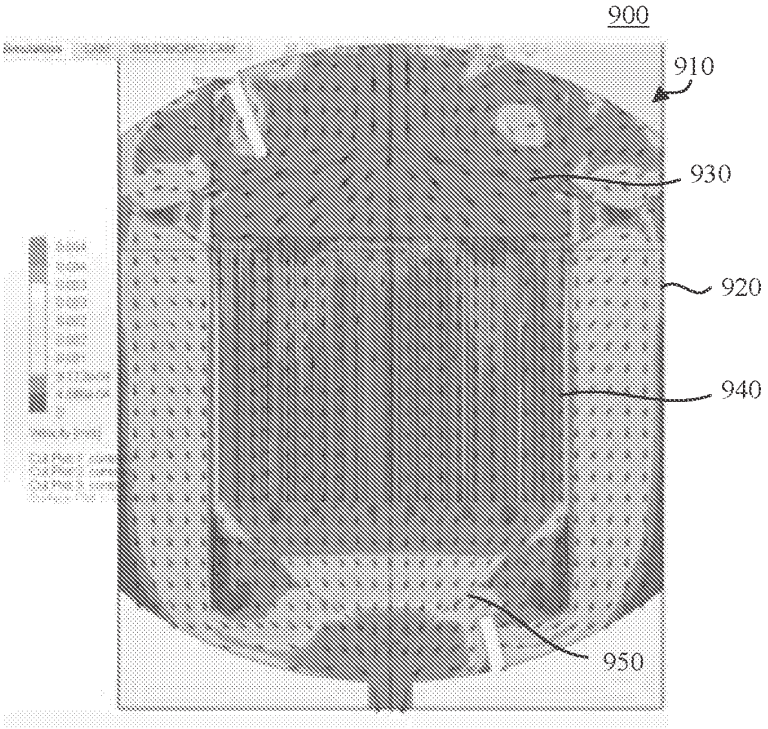

FIG. 9A

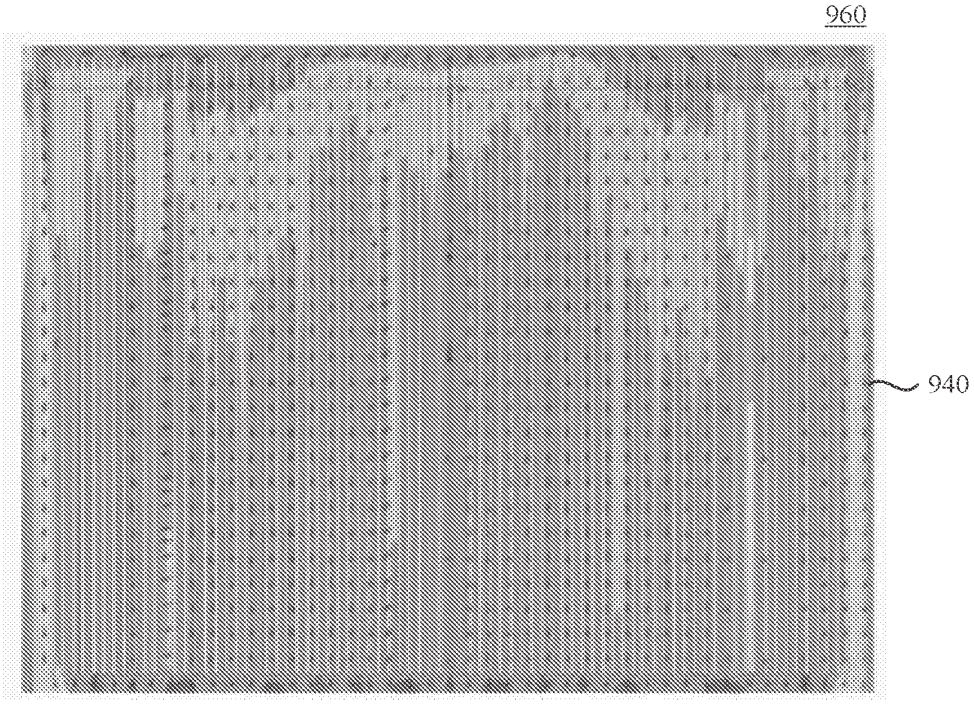

FIG. 9B

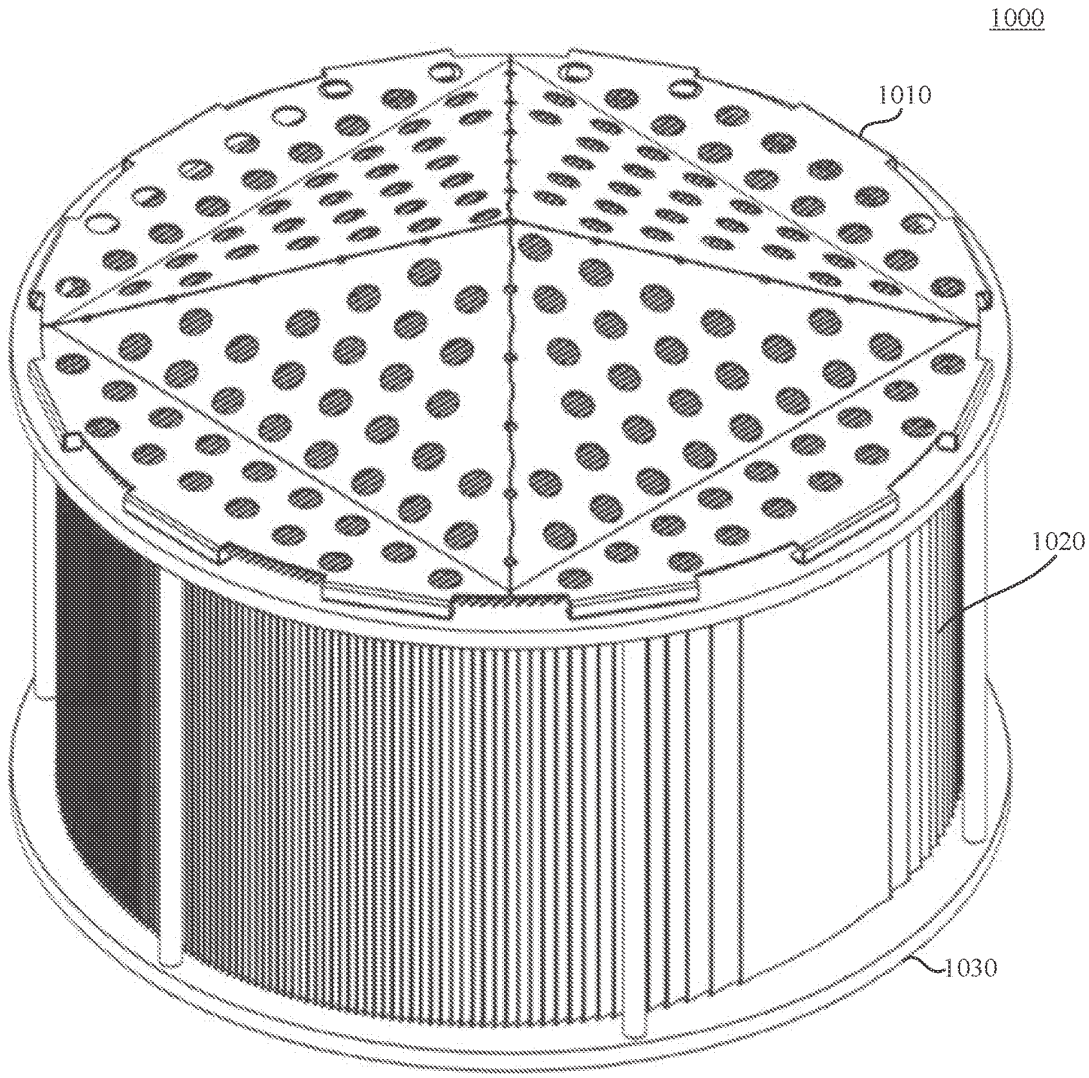

FIG. 10A

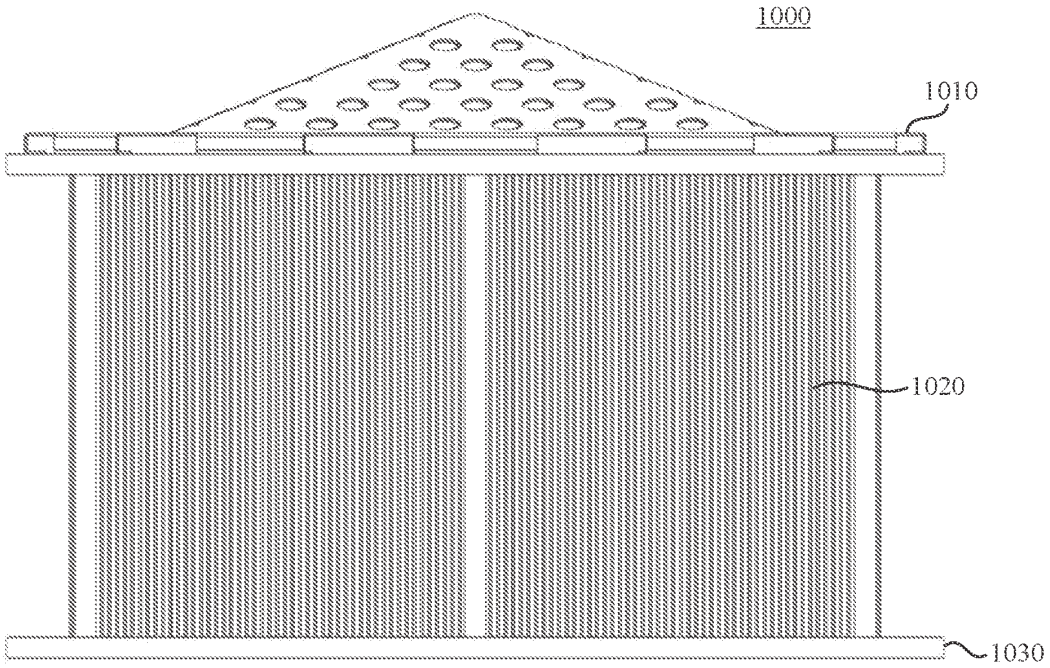

FIG. 10B

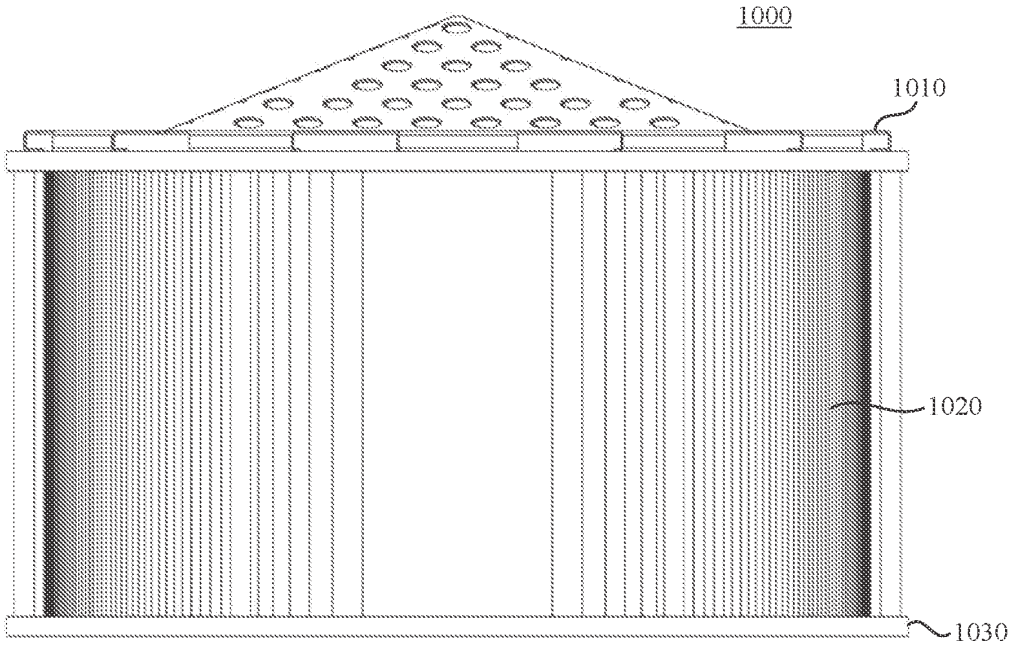

FIG. 10C

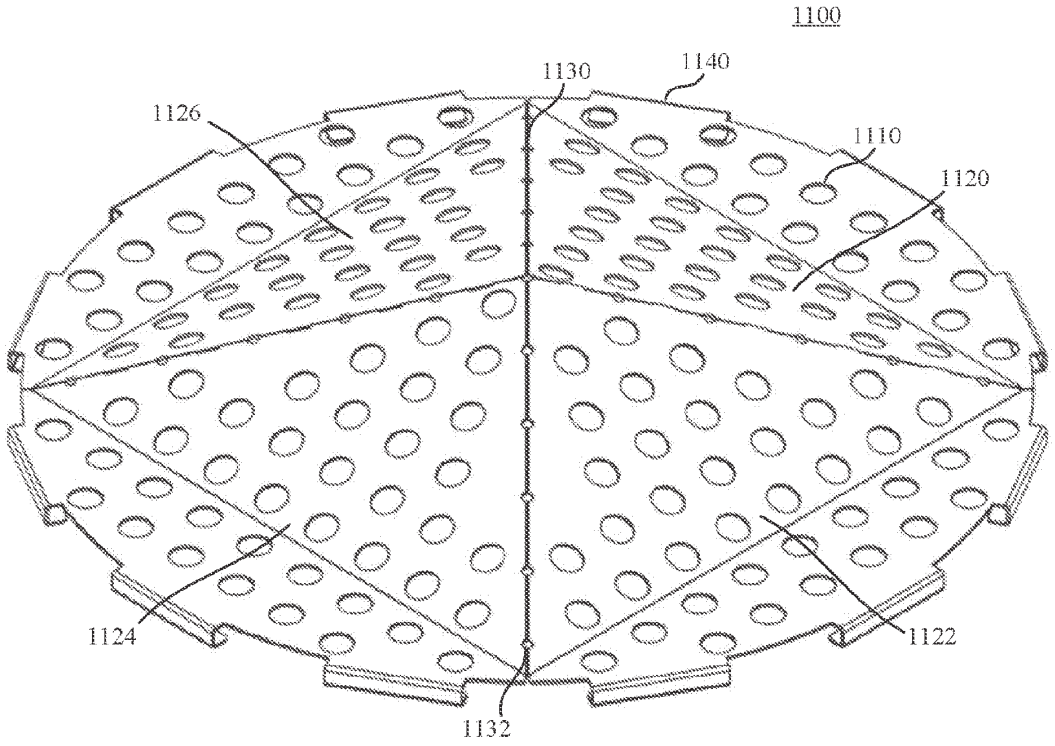

FIG. 11A

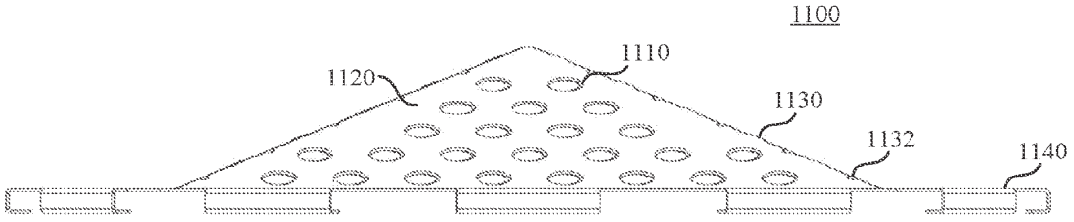

FIG. 11B

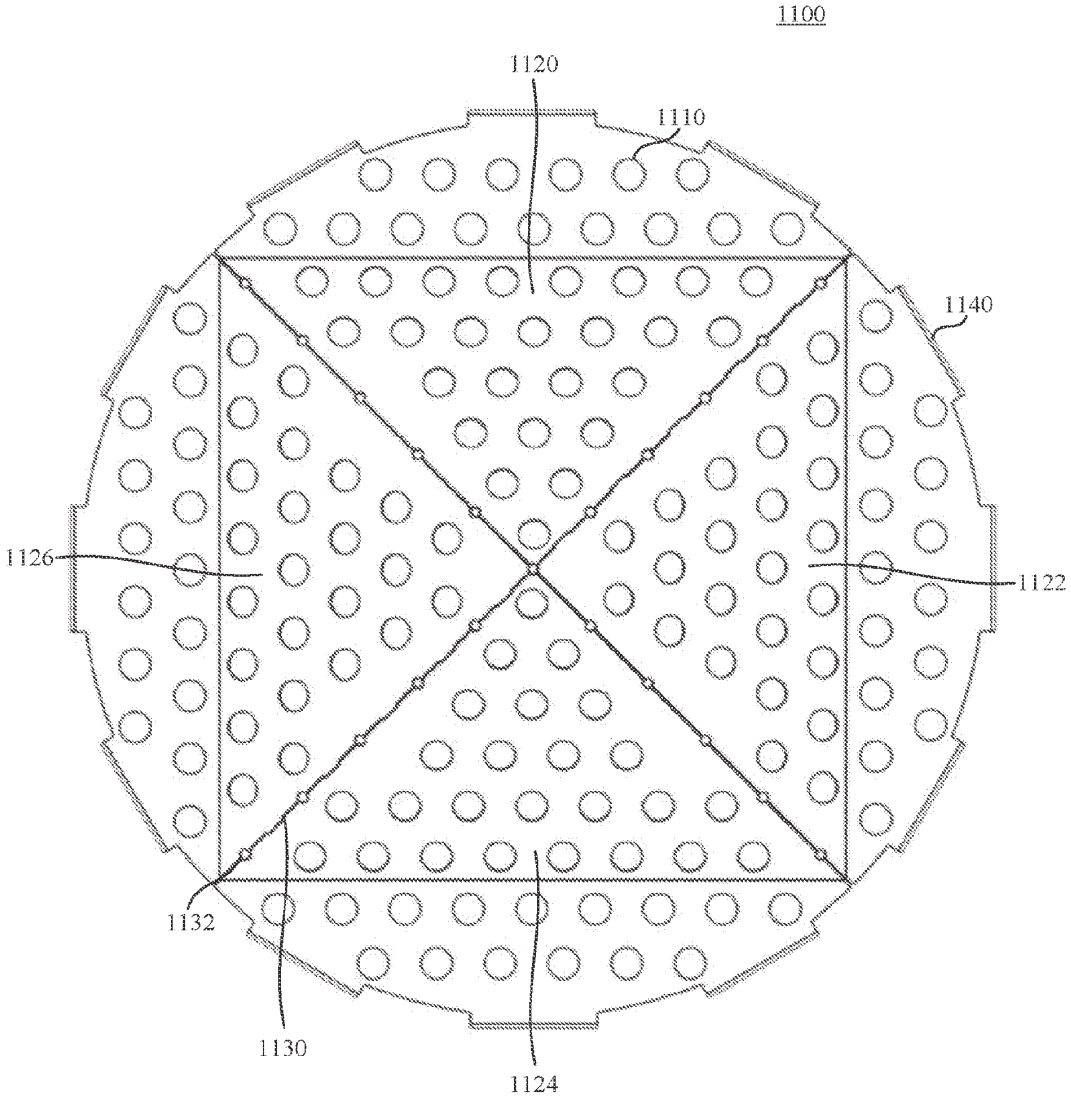

FIG. 11C

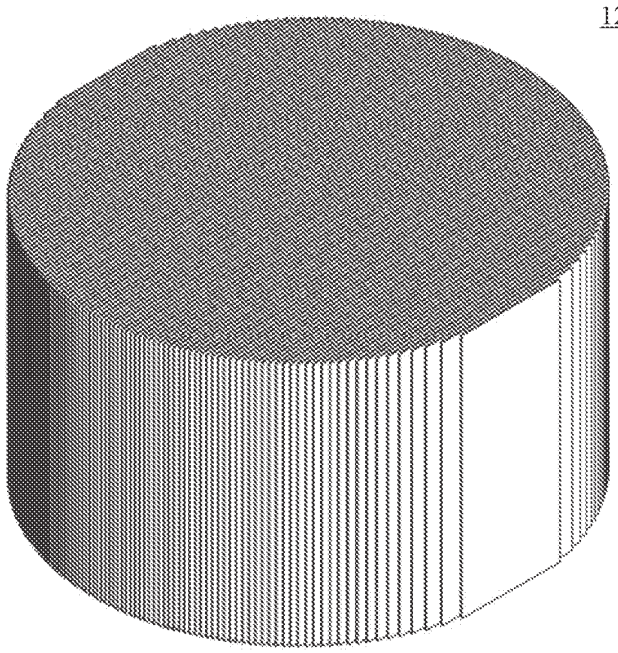

FIG. 12A

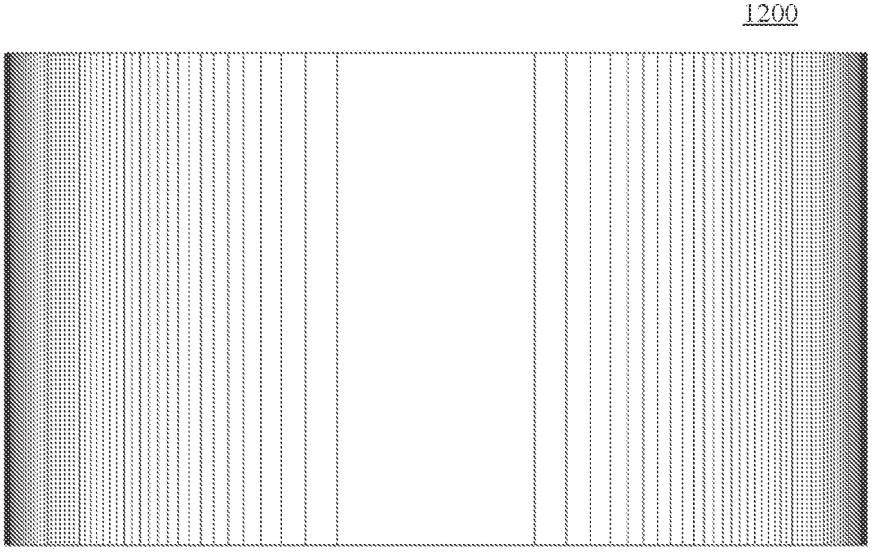

FIG. 12B

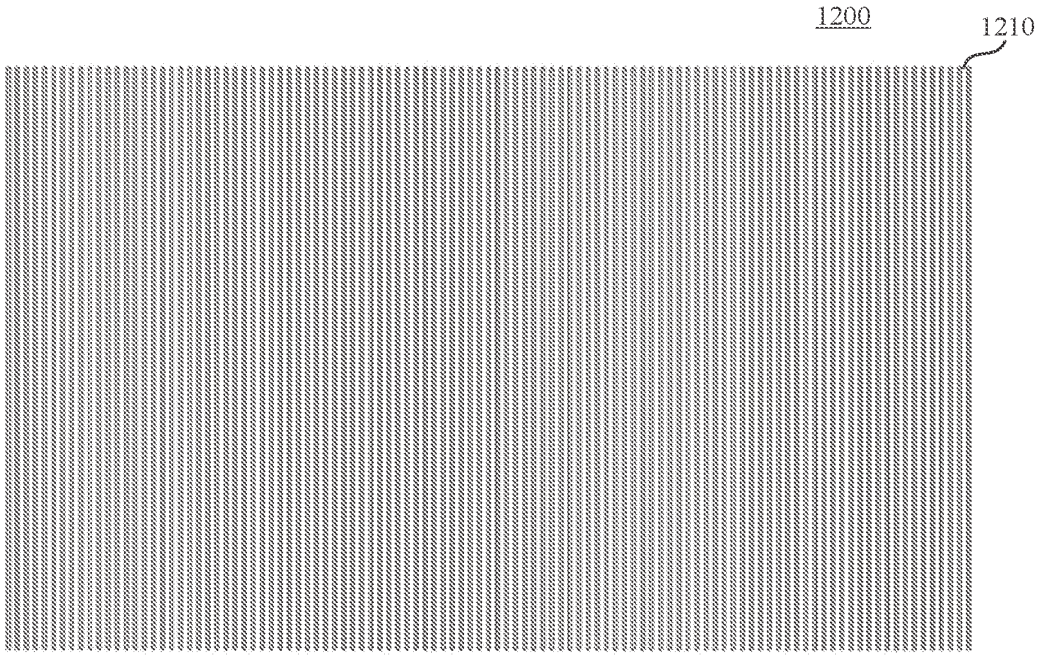

FIG. 12C

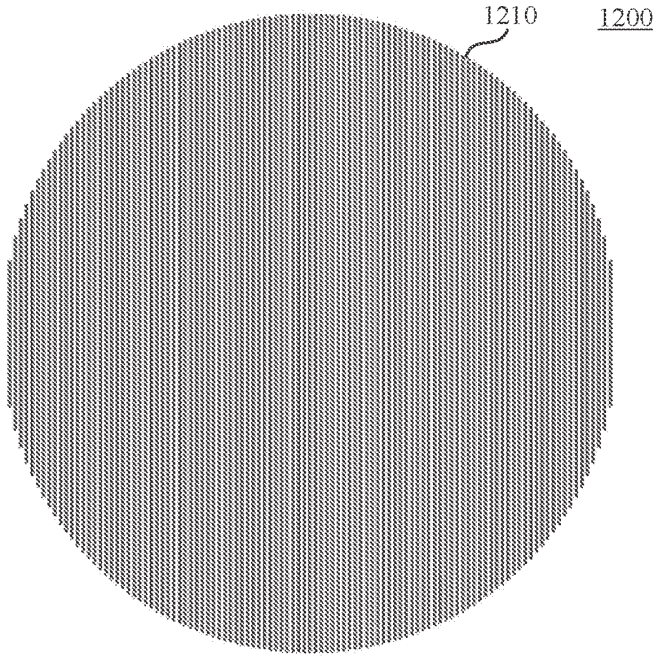

FIG. 12D

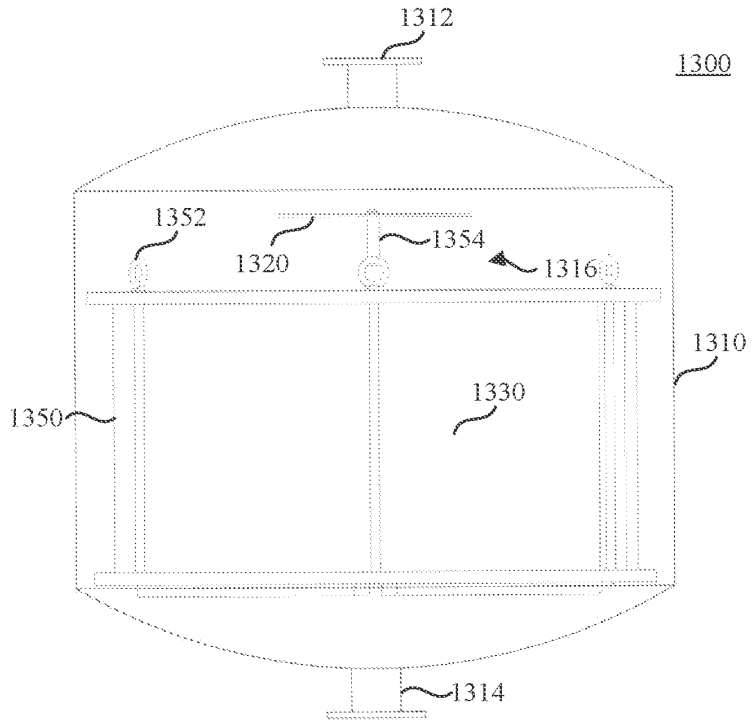

FIG. 13A

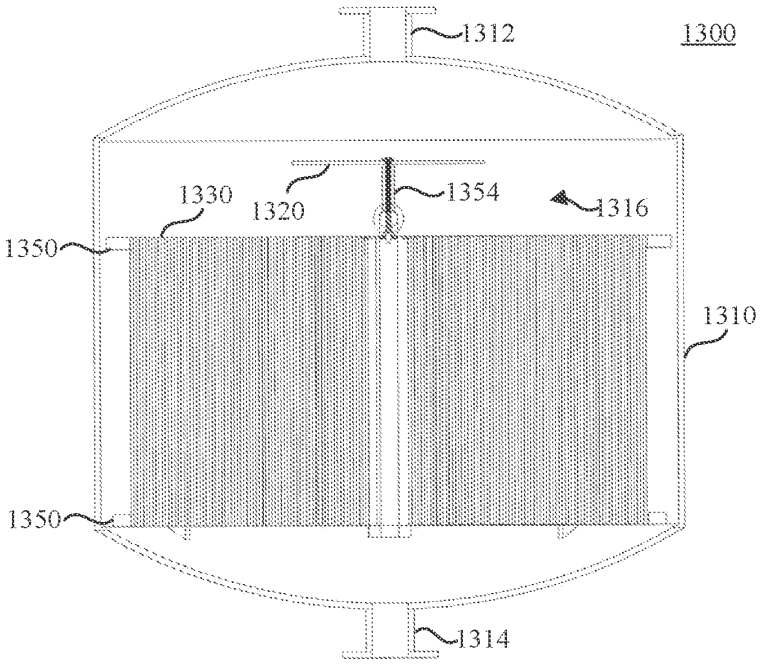

FIG. 13B

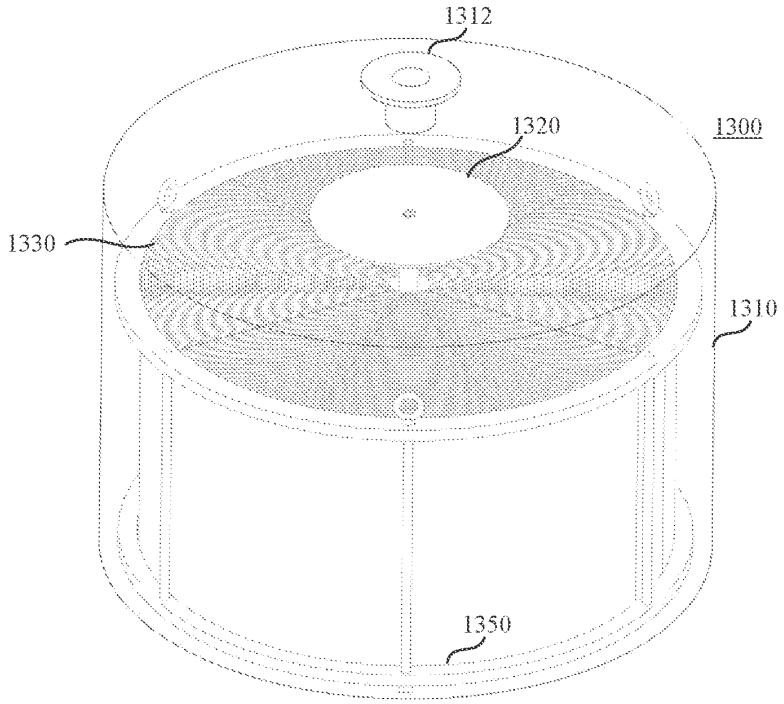

FIG. 13C

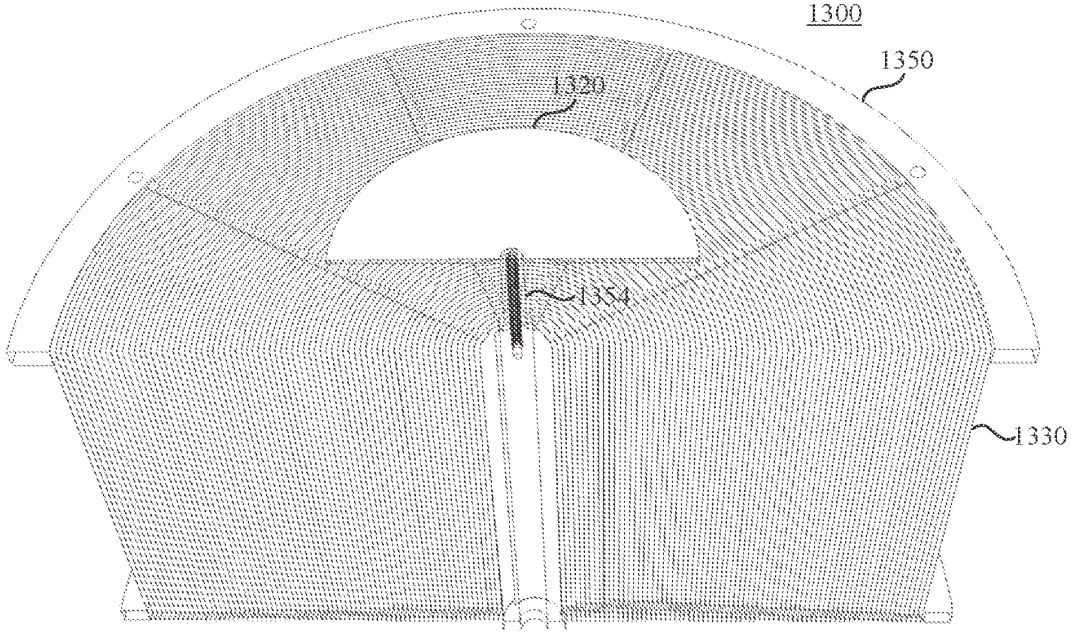

FIG. 13D

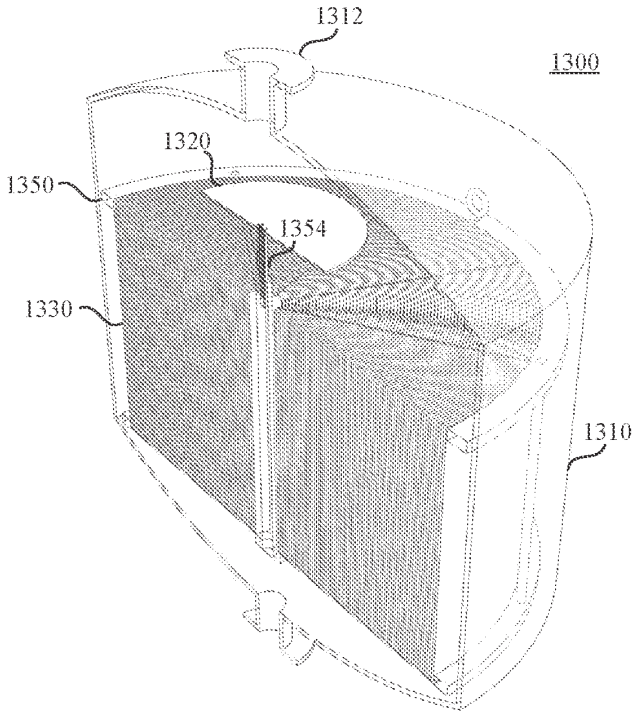

FIG. 13E

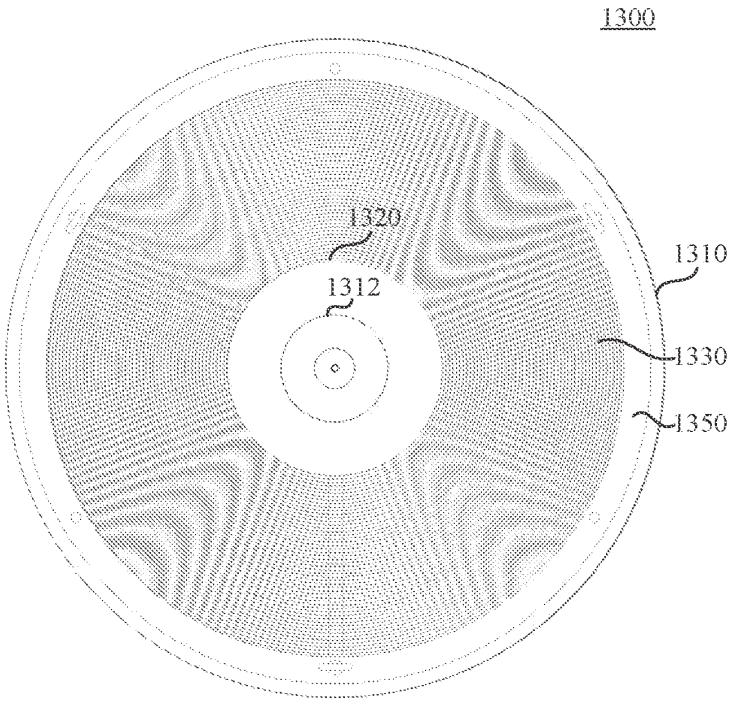

FIG. 13F

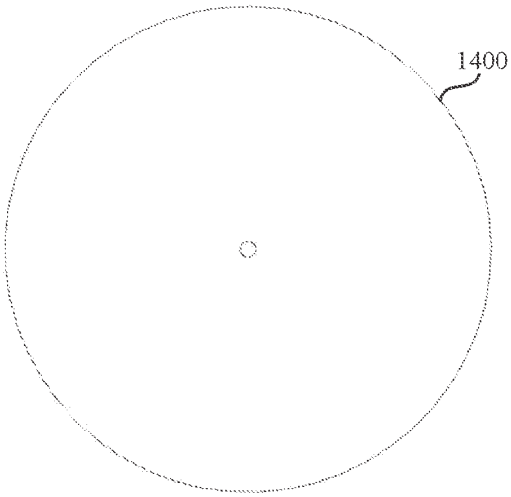

FIG. 14A

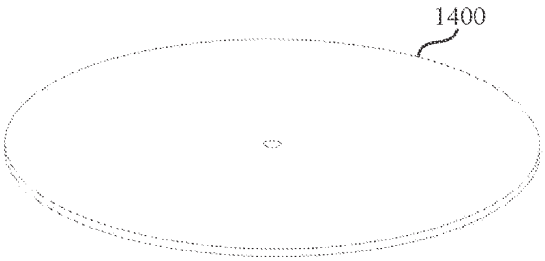

FIG. 14B

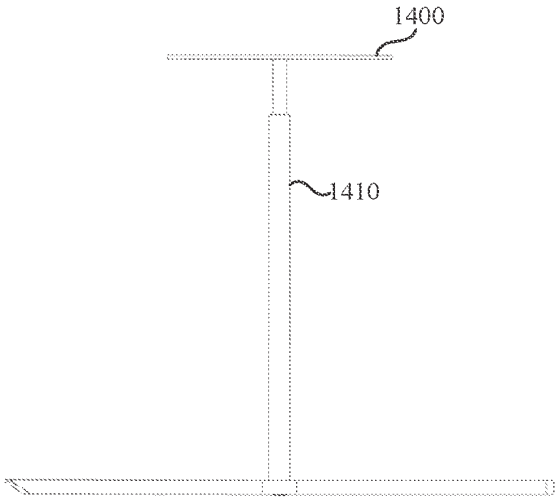

FIG. 14C

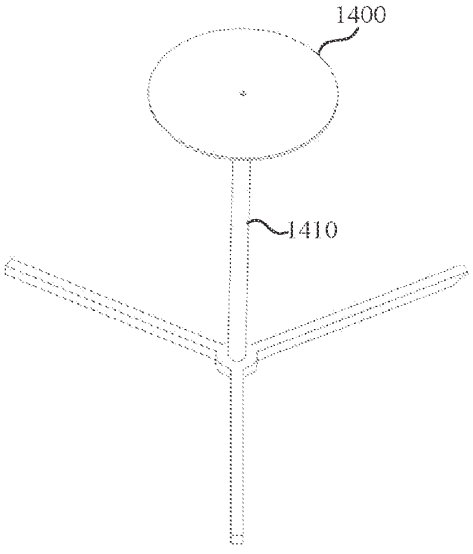

FIG. 14D

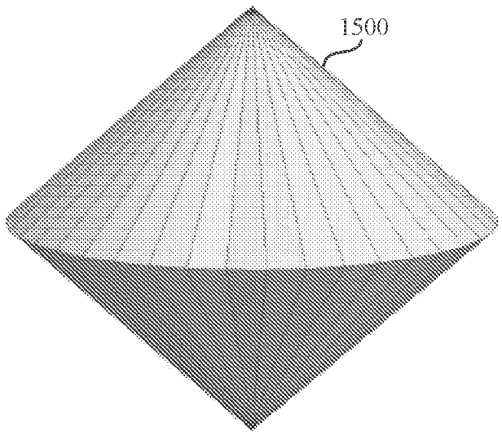

FIG. 15A

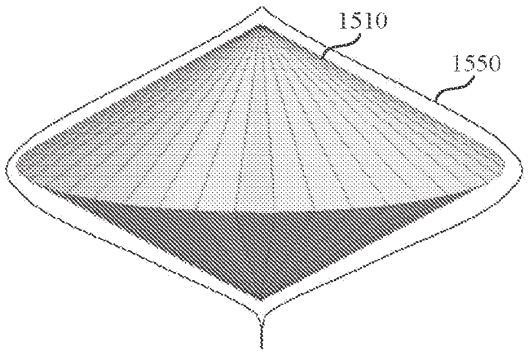

FIG. 15B

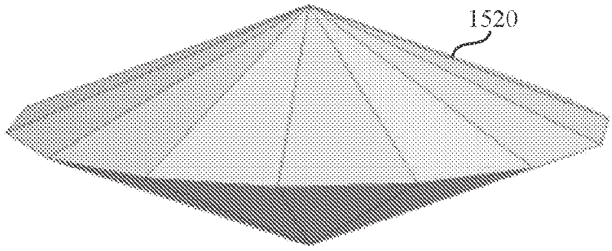

FIG. 15C

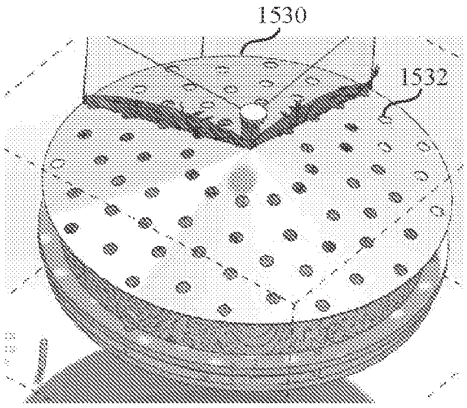

FIG. 15D

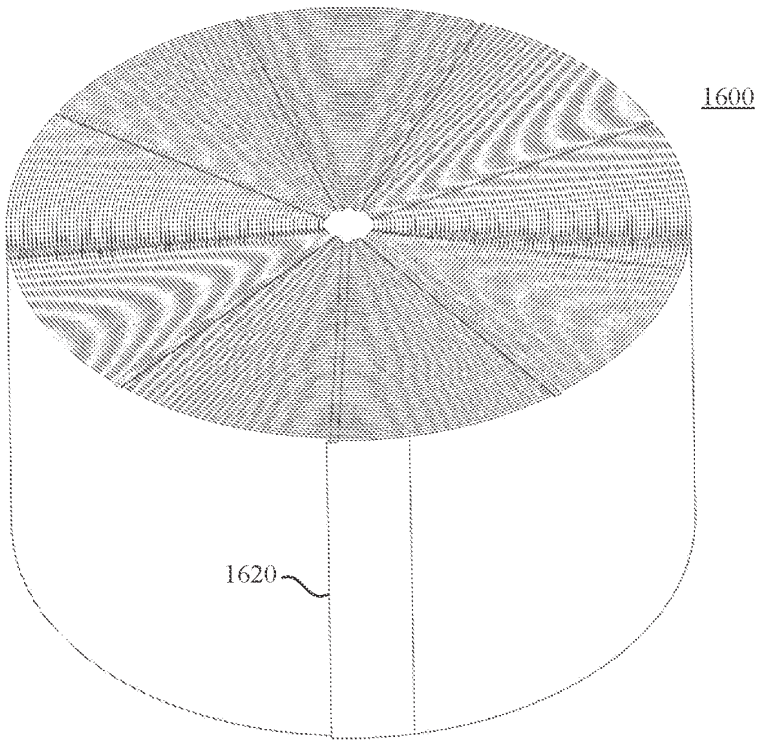

FIG. 16A

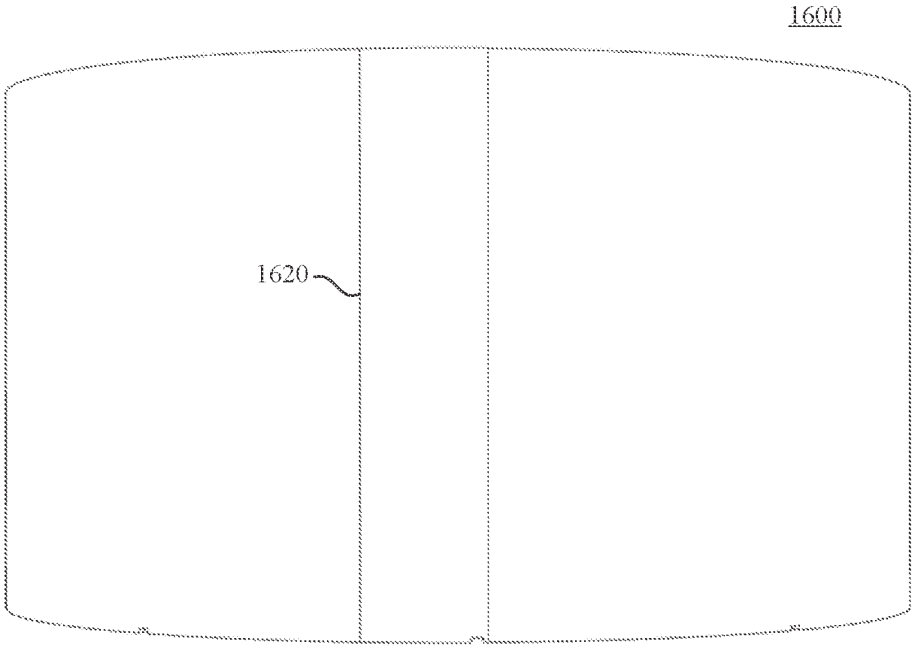

FIG. 16B

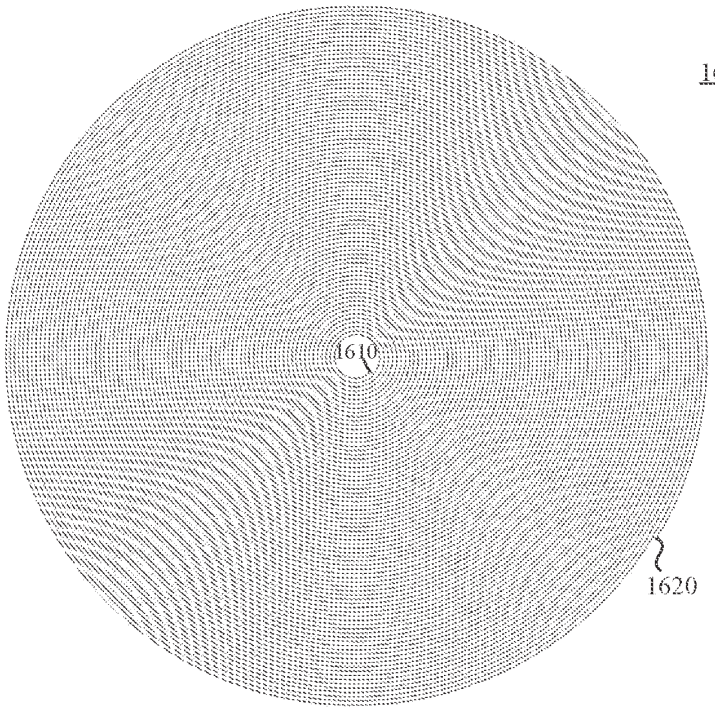

FIG. 16C

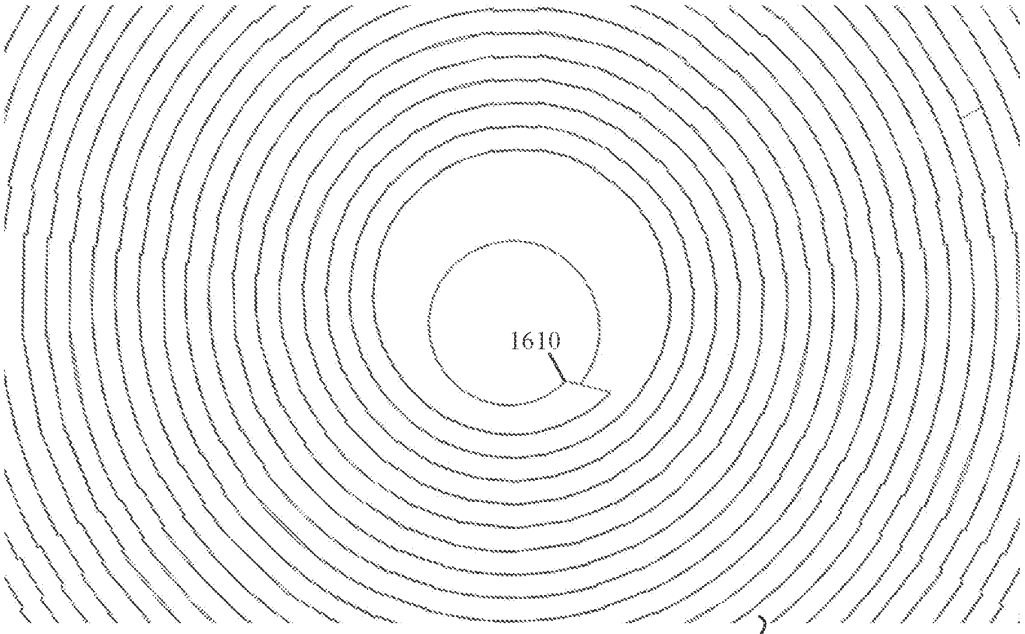

FIG. 16D

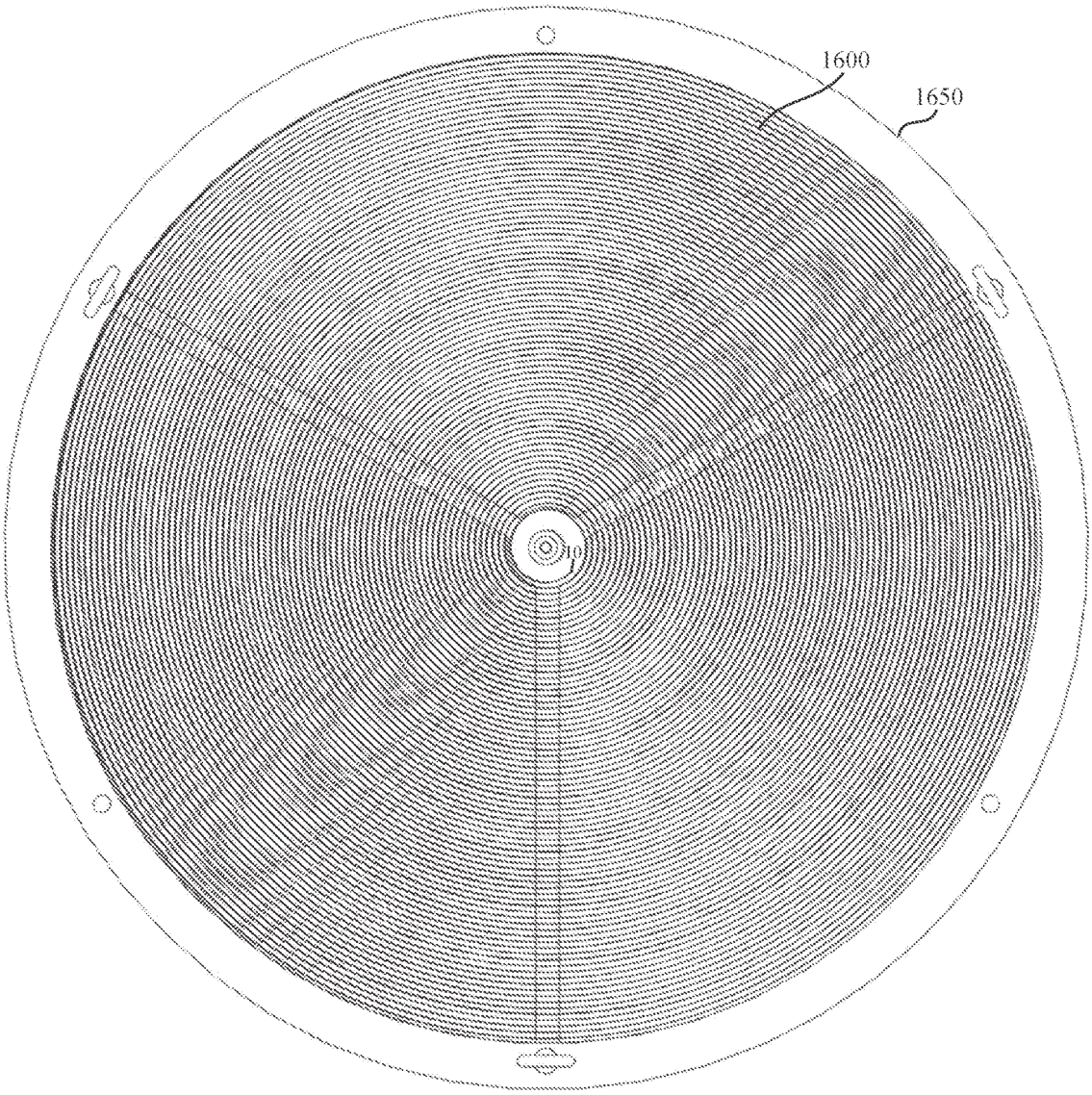

FIG. 16E

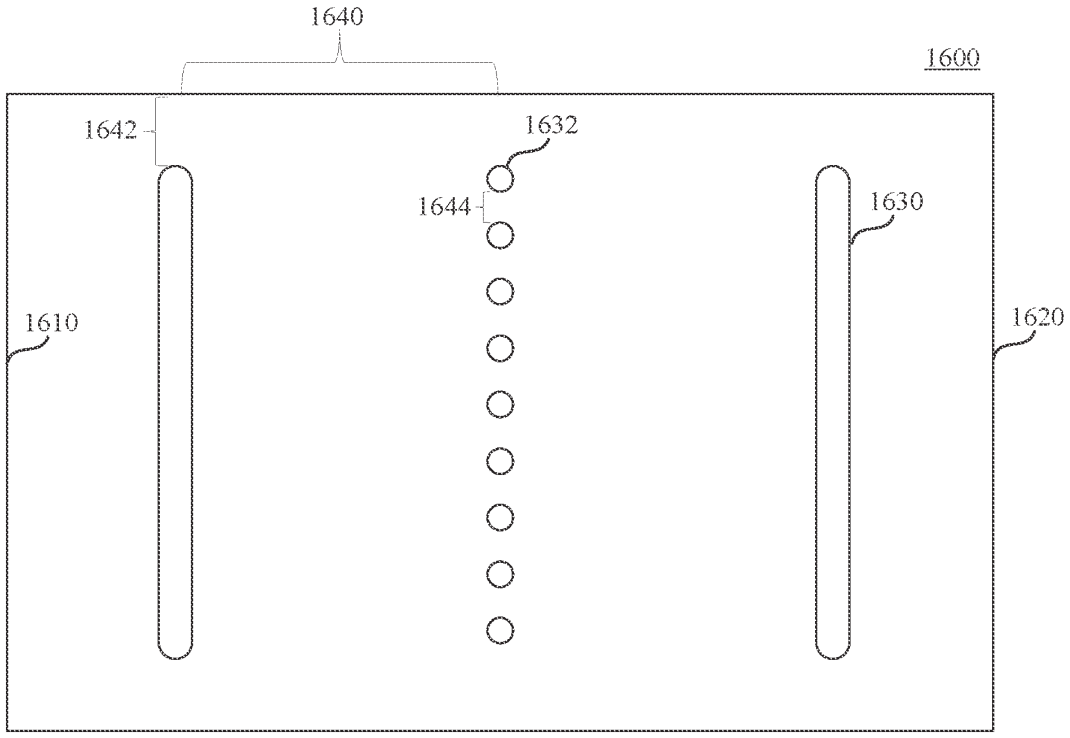

FIG. 16F

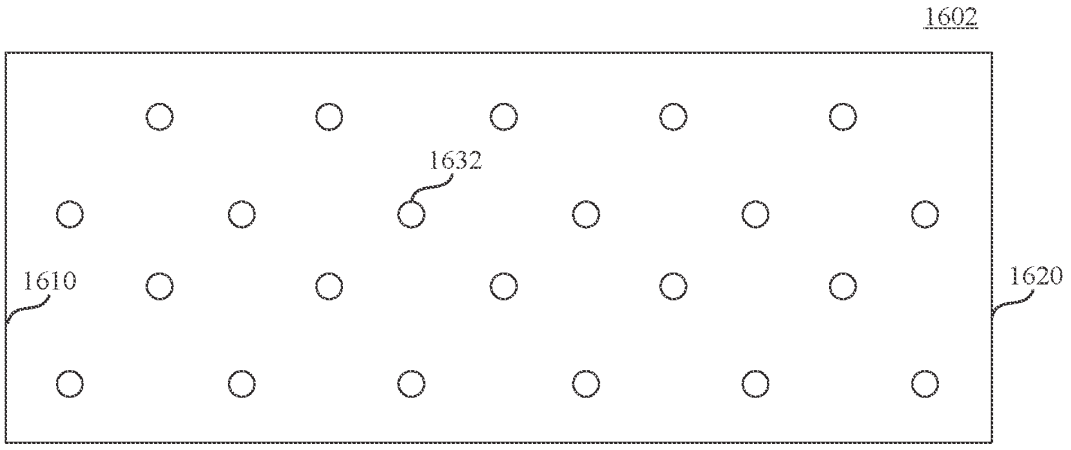

FIG. 16G

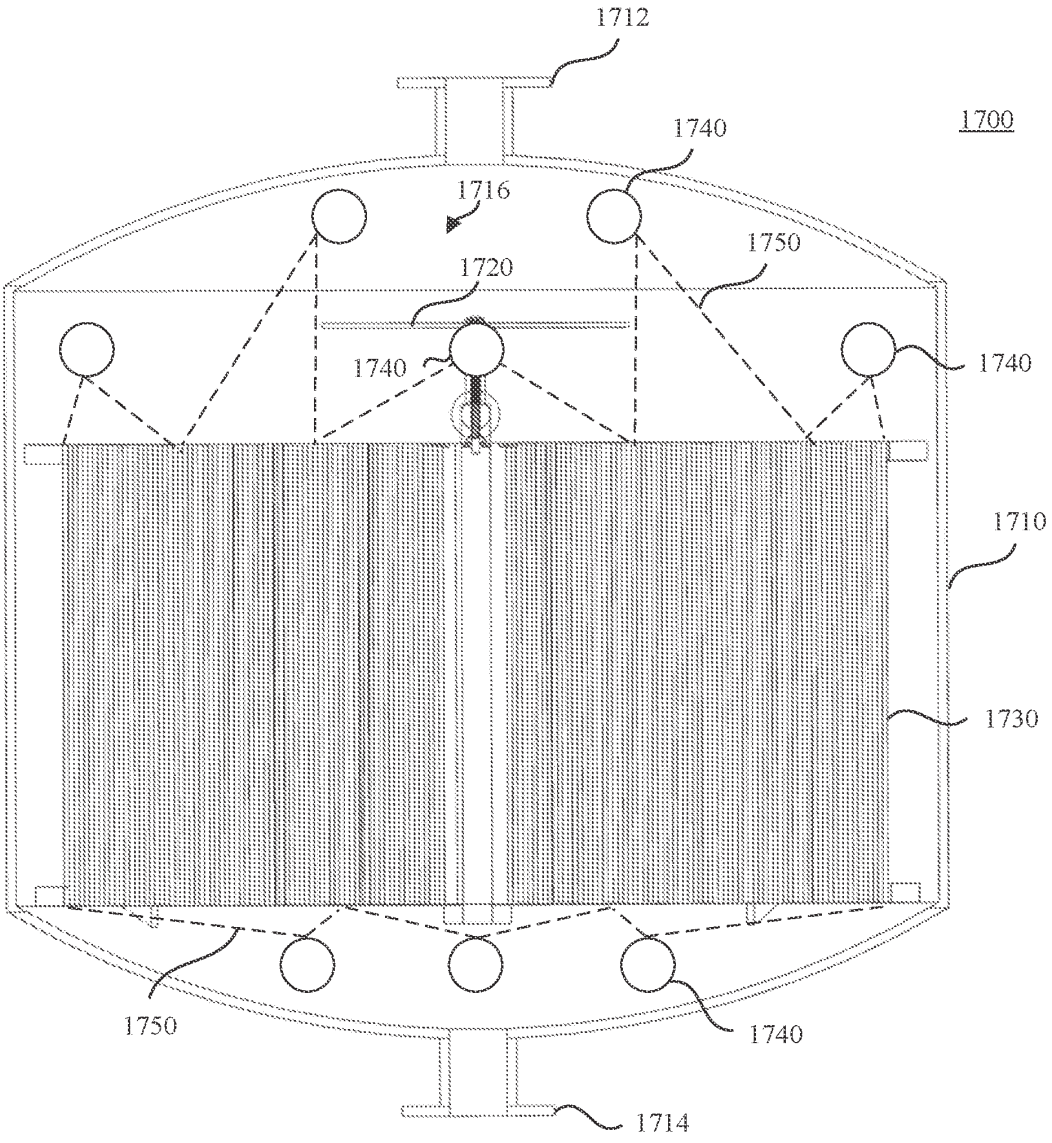
1712
1700
1740
1716
1750
1720
1740
1740
1710
1730
1750
1740
1714

FIG. 17A

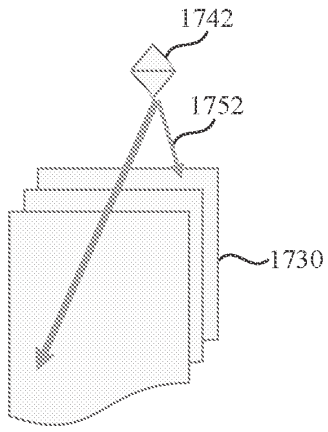

FIG. 17B

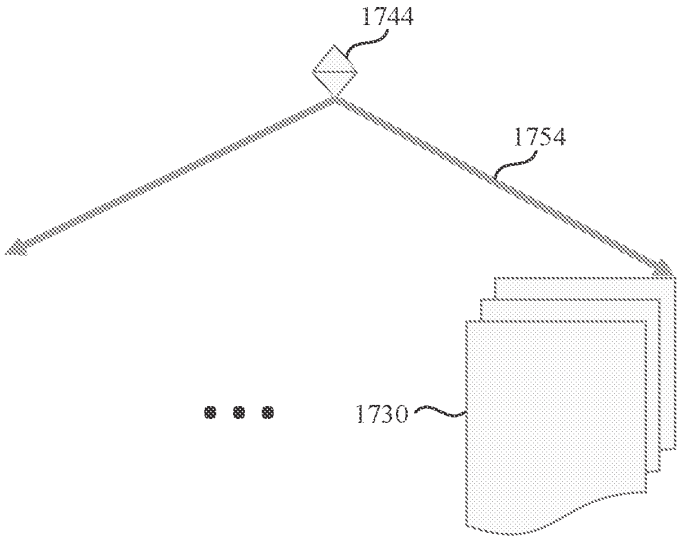

FIG. 17C

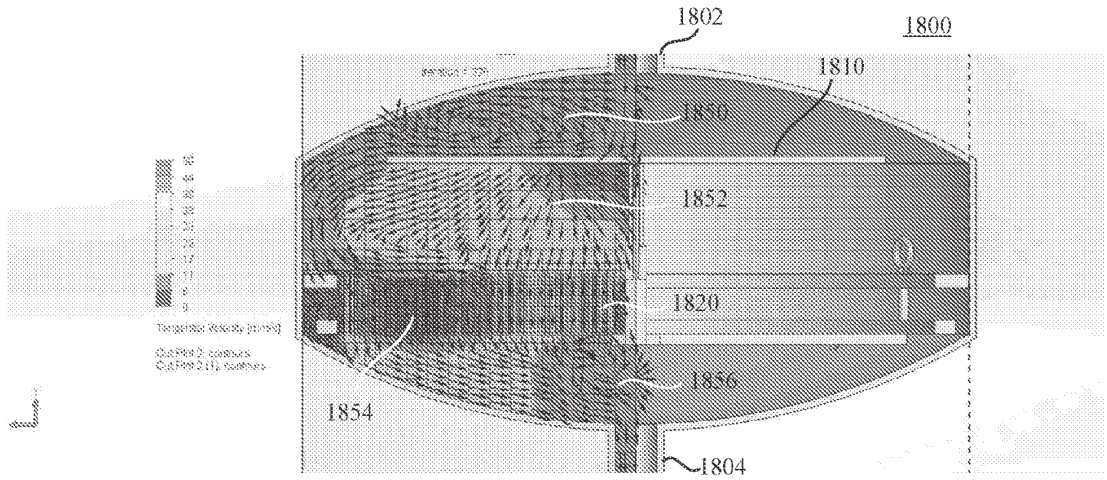

FIG. 18A

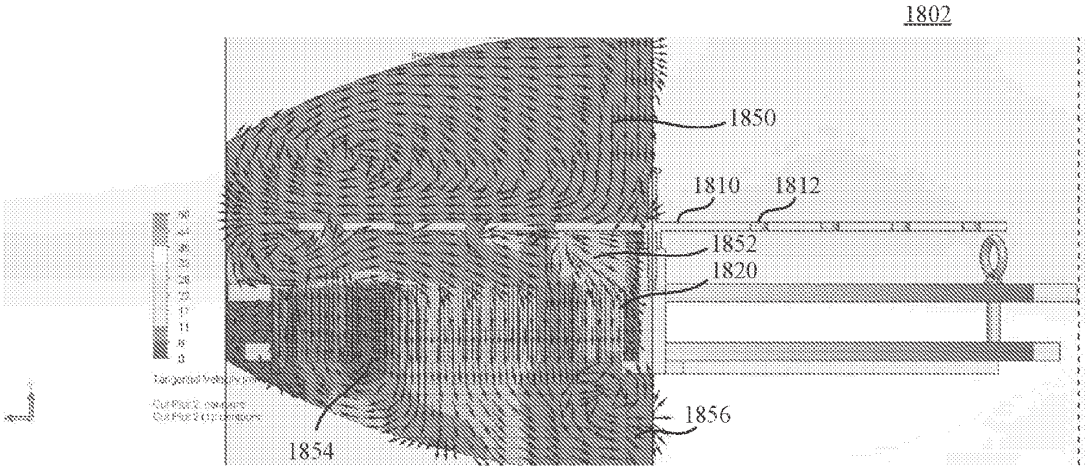

FIG. 18B

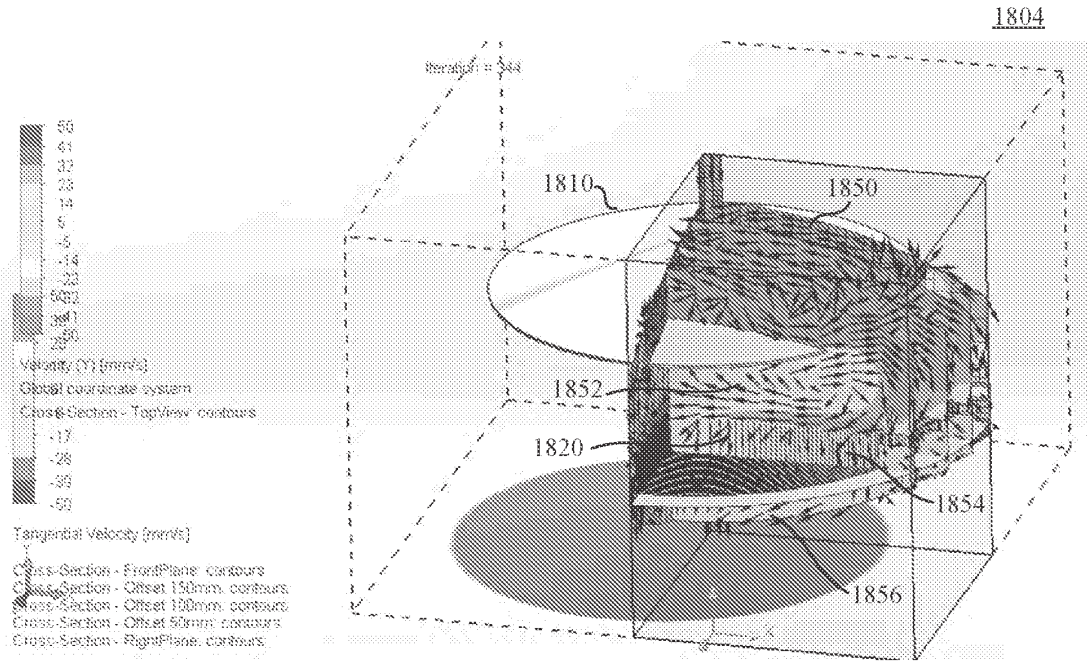

FIG. 18C

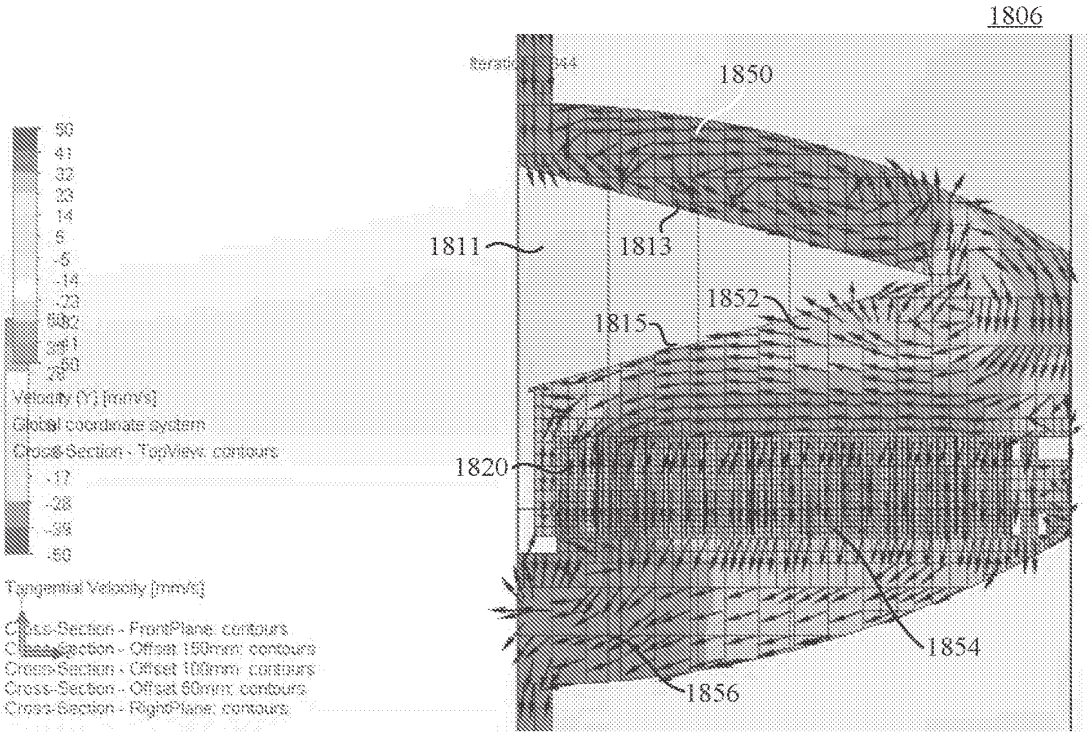

FIG. 18D

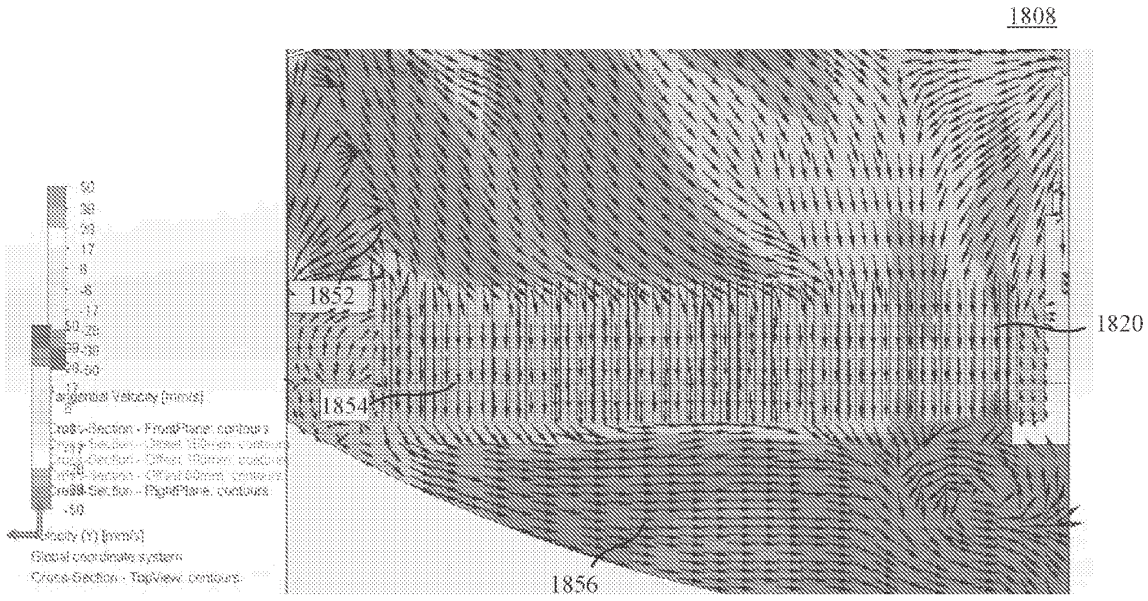

FIG. 18E

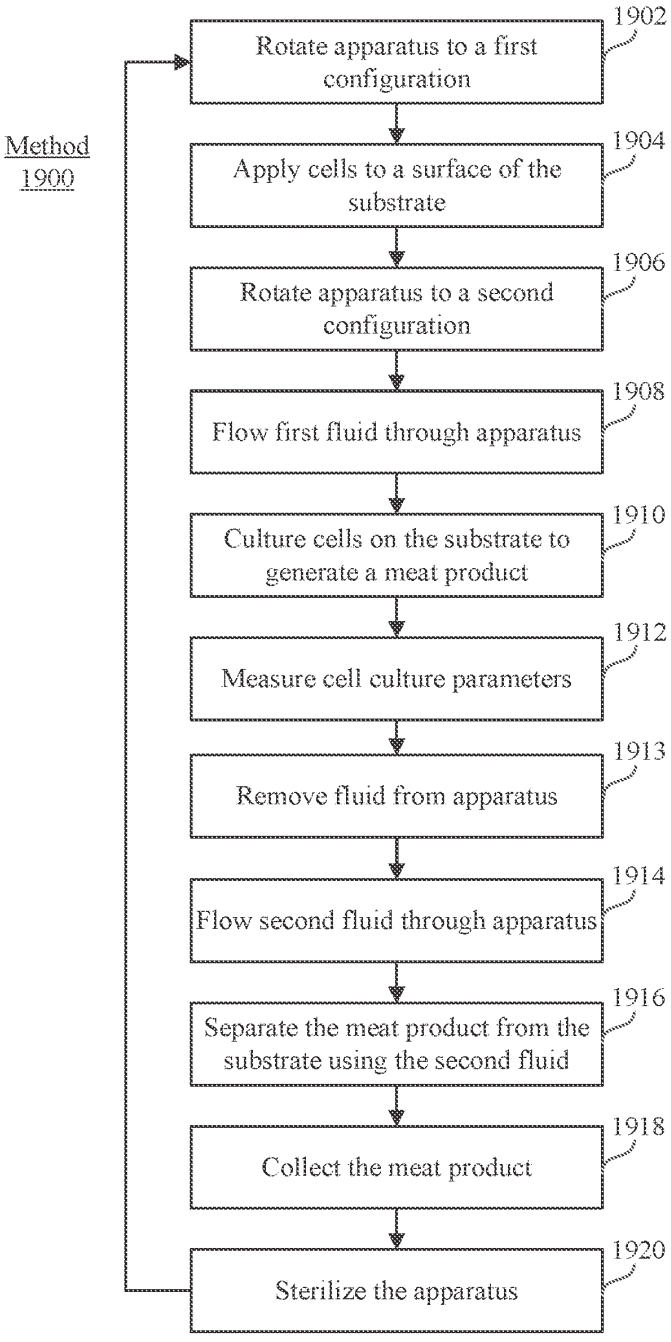
Method 1900
Rotate apparatus to a first configuration
1902
Apply cells to a surface of the substrate
1904
Rotate apparatus to a second configuration
1906
Flow first fluid through apparatus
1908
Culture cells on the substrate to generate a meat product
1910
Measure cell culture parameters
1912
Remove fluid from apparatus
1913
Flow second fluid through apparatus
1914
Separate the meat product from the substrate using the second fluid
1916
Collect the meat product
1918
Sterilize the apparatus
1920

FIG. 19