FIG. 2

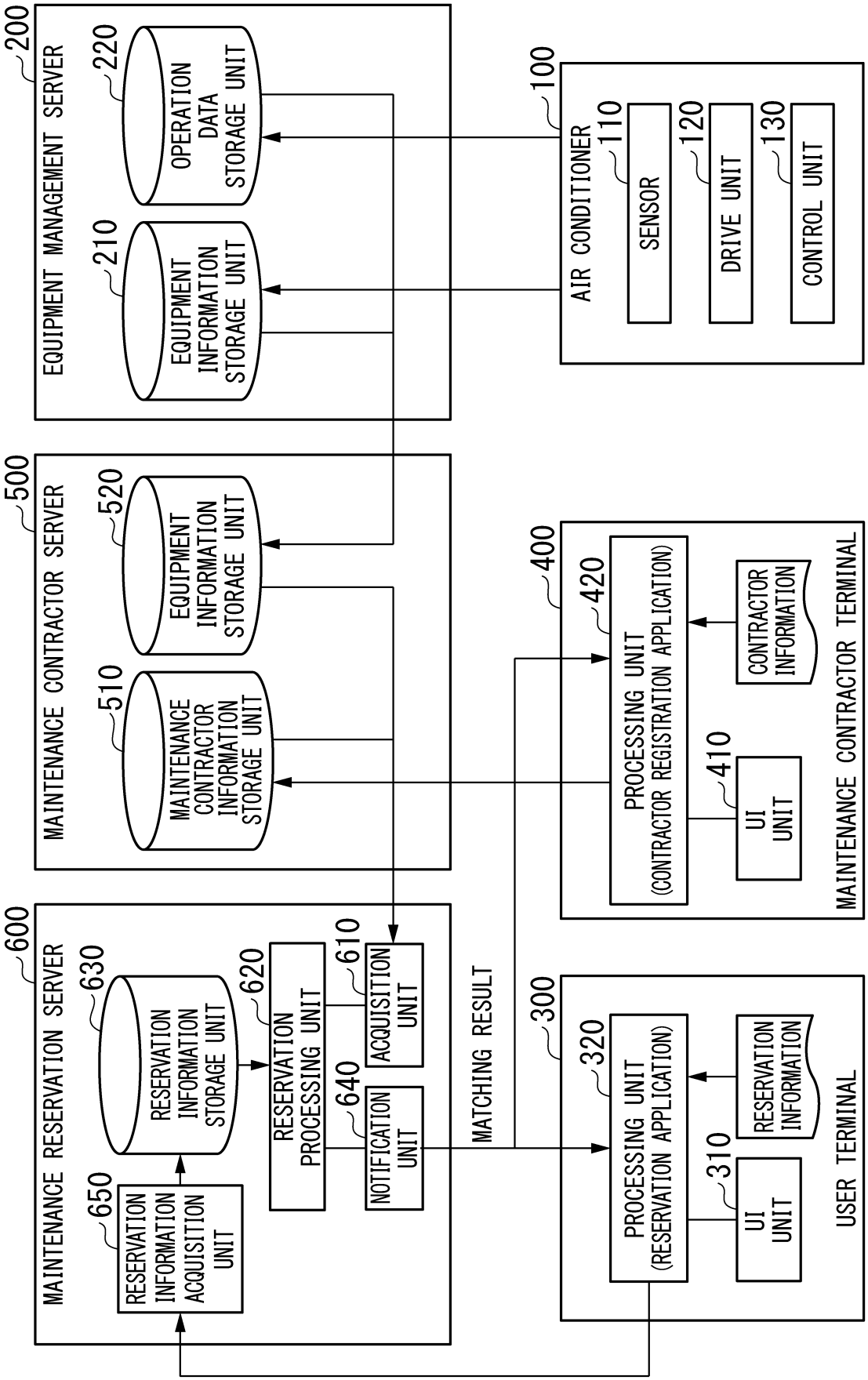
200
EQUIPMENT MANAGEMENT SERVER
220
OPERATION DATA STORAGE UNIT
210
EQUIPMENT INFORMATION STORAGE UNIT
100
AIR CONDITIONER
110
SENSOR
120
DRIVE UNIT
130
CONTROL UNIT
500
MAINTENANCE CONTRACTOR SERVER
520
EQUIPMENT INFORMATION STORAGE UNIT
510
MAINTENANCE CONTRACTOR INFORMATION STORAGE UNIT
400
420
PROCESSING UNIT (CONTRACTOR REGISTRATION APPLICATION)
CONTRACTOR INFORMATION
410
UI UNIT
MAINTENANCE CONTRACTOR TERMINAL
600
MAINTENANCE RESERVATION SERVER
630
RESERVATION INFORMATION STORAGE UNIT
620
RESERVATION PROCESSING UNIT
610
ACQUISITION UNIT
640
NOTIFICATION UNIT
650
RESERVATION INFORMATION ACQUISITION UNIT
MATCHING RESULT
300
320
PROCESSING UNIT (RESERVATION APPLICATION)
RESERVATION INFORMATION
310
UI UNIT
USER TERMINAL

FIG. 8

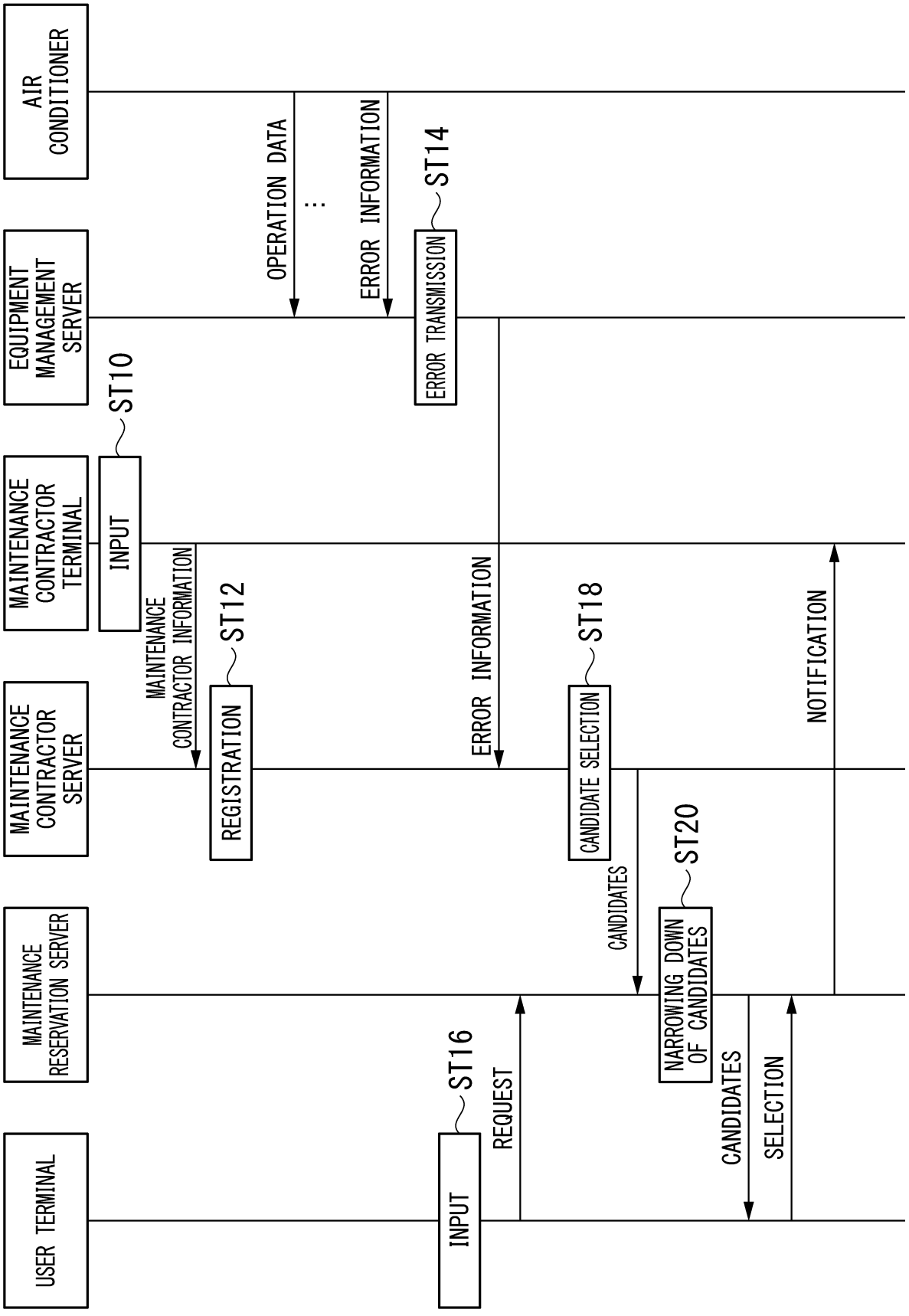
AIR CONDITIONER
EQUIPMENT MANAGEMENT SERVER
MAINTENANCE CONTRACTOR TERMINAL
MAINTENANCE CONTRACTOR SERVER
MAINTENANCE RESERVATION SERVER
USER TERMINAL
OPERATION DATA
ERROR INFORMATION
ST14
ERROR TRANSMISSION
ST10
INPUT
MAINTENANCE CONTRACTOR INFORMATION
ST12
REGISTRATION
ERROR INFORMATION
ST18
CANDIDATE SELECTION
NOTIFICATION
CANDIDATES
ST20
NARROWING DOWN OF CANDIDATES
ST16
INPUT
REQUEST
CANDIDATES
SELECTION

FIG. 9

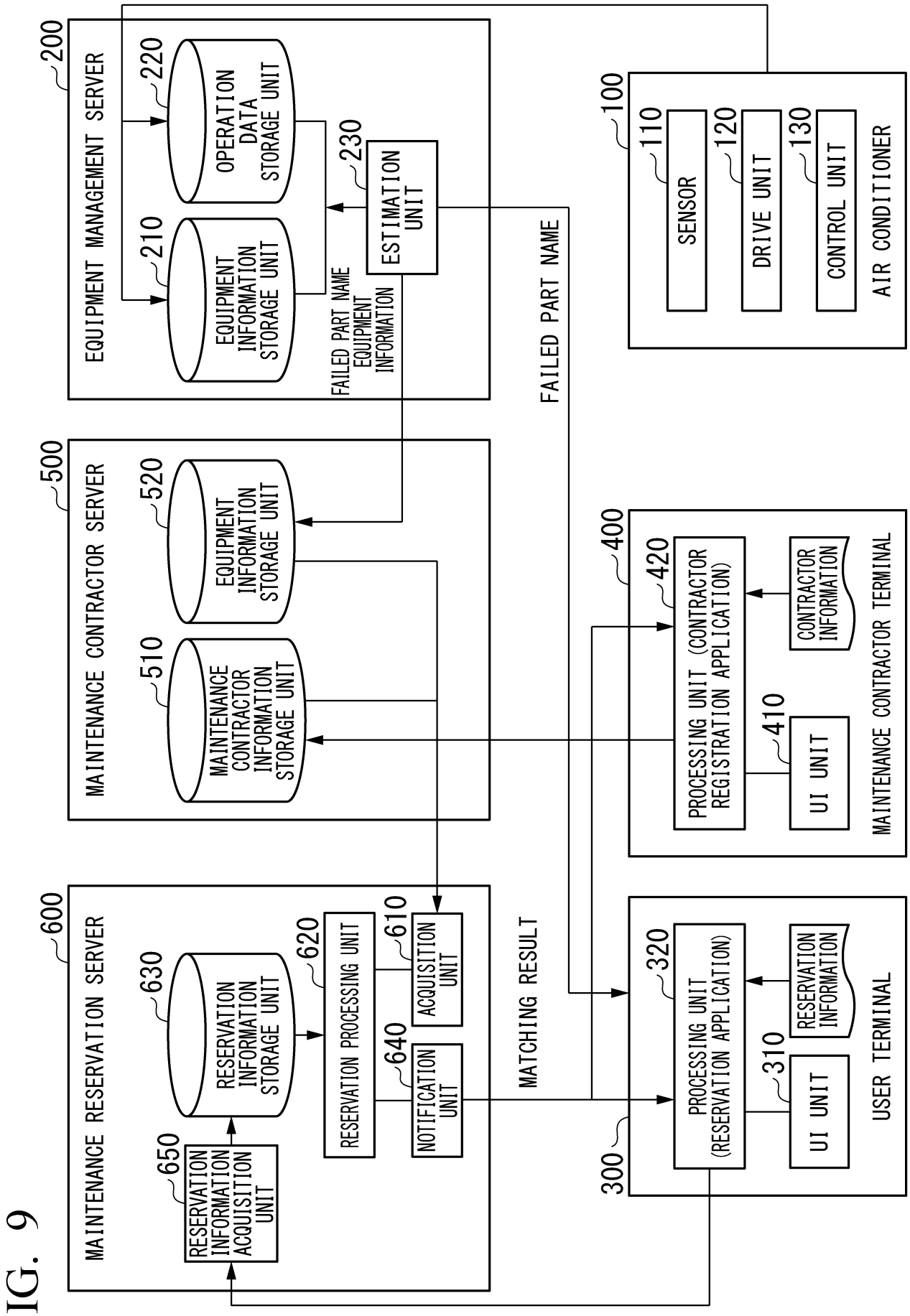
200
EQUIPMENT MANAGEMENT SERVER
220
OPERATION DATA STORAGE UNIT
210
EQUIPMENT INFORMATION STORAGE UNIT
230
ESTIMATION UNIT
FAILED PART NAME EQUIPMENT INFORMATION
FAILED PART NAME
100
AIR CONDITIONER
110
SENSOR
120
DRIVE UNIT
130
CONTROL UNIT
500
MAINTENANCE CONTRACTOR SERVER
520
EQUIPMENT INFORMATION STORAGE UNIT
510
MAINTENANCE CONTRACTOR INFORMATION STORAGE UNIT
400
MAINTENANCE CONTRACTOR TERMINAL
420
PROCESSING UNIT (CONTRACTOR REGISTRATION APPLICATION)
CONTRACTOR INFORMATION
410
UI UNIT
600
MAINTENANCE RESERVATION SERVER
630
RESERVATION INFORMATION STORAGE UNIT
620
RESERVATION PROCESSING UNIT
610
ACQUISITION UNIT
640
NOTIFICATION UNIT
650
RESERVATION INFORMATION ACQUISITION UNIT
MATCHING RESULT
300
USER TERMINAL
320
PROCESSING UNIT (RESERVATION APPLICATION)
RESERVATION INFORMATION
310
UI UNIT