FIG. 1

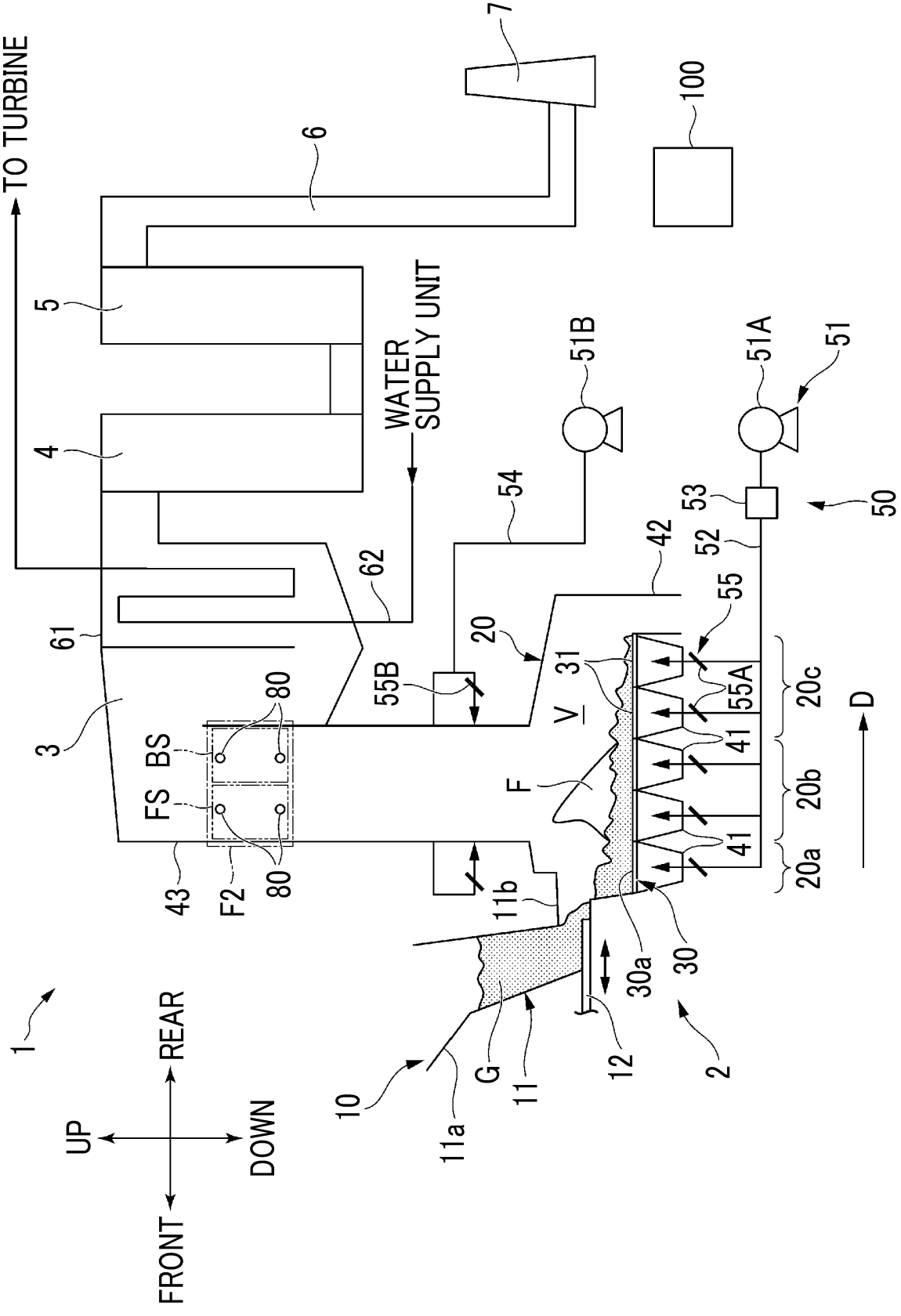
TO TURBINE
WATER SUPPLY UNIT
UP
DOWN
FRONT
REAR
D
1
2
3
4
5
6
7
10
11
11a
11b
12
20
20a
20b
20c
30
30a
31
41
42
43
50
51
51A
51B
52
53
54
55
55A
55B
61
62
80
100
BS
FS
F2
F
G
V

FIG. 2

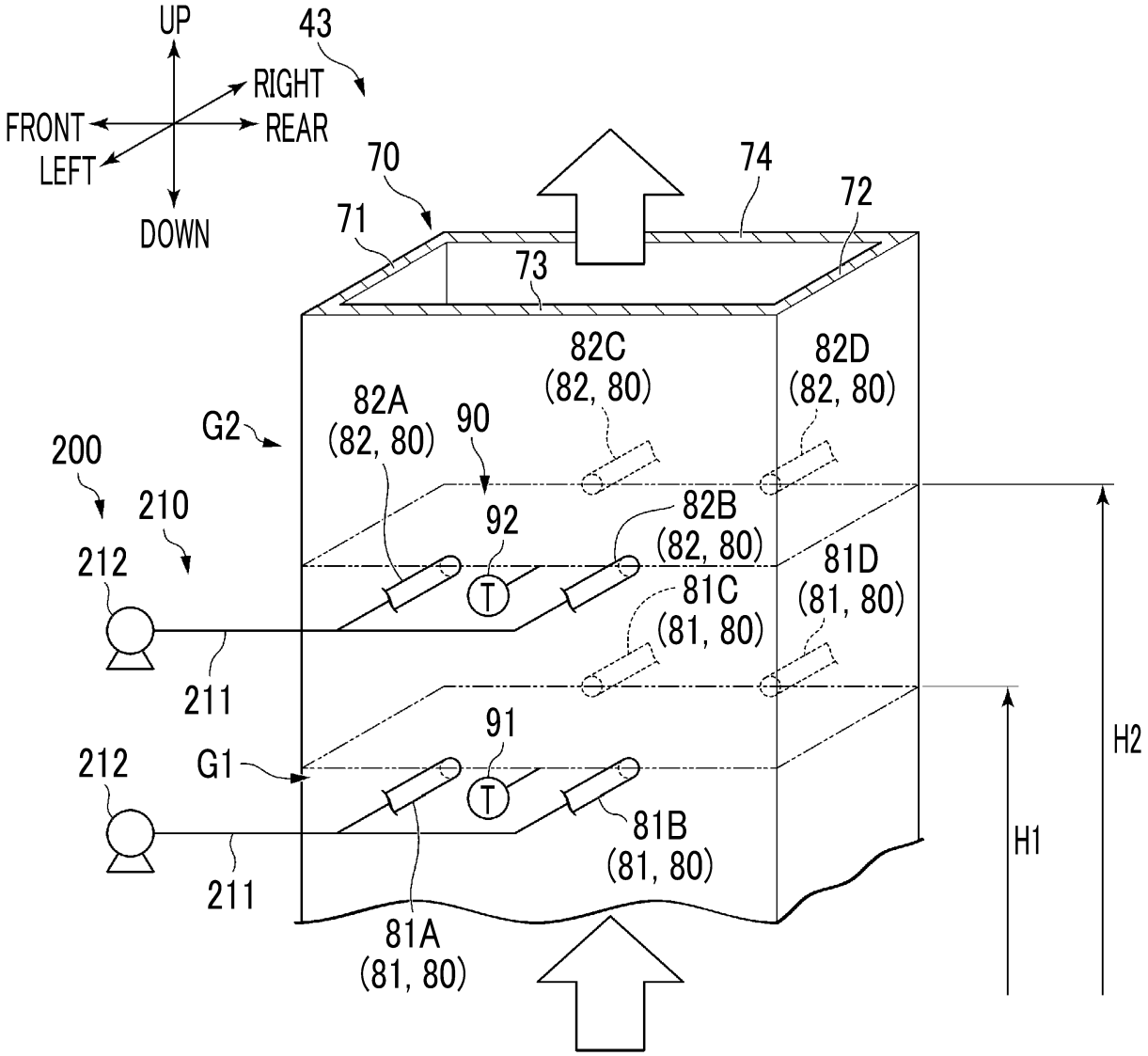
UP
43
RIGHT
FRONT
REAR
LEFT
DOWN
70
74
72
71
73
82C
(82, 80)
82D
(82, 80)
82A
(82, 80)
G2
90
200
210
92
82B
(82, 80)
212
81D
(81, 80)
81C
(81, 80)
211
91
212
G1
81B
(81, 80)
211
81A
(81, 80)
H2
H1

FIG. 3

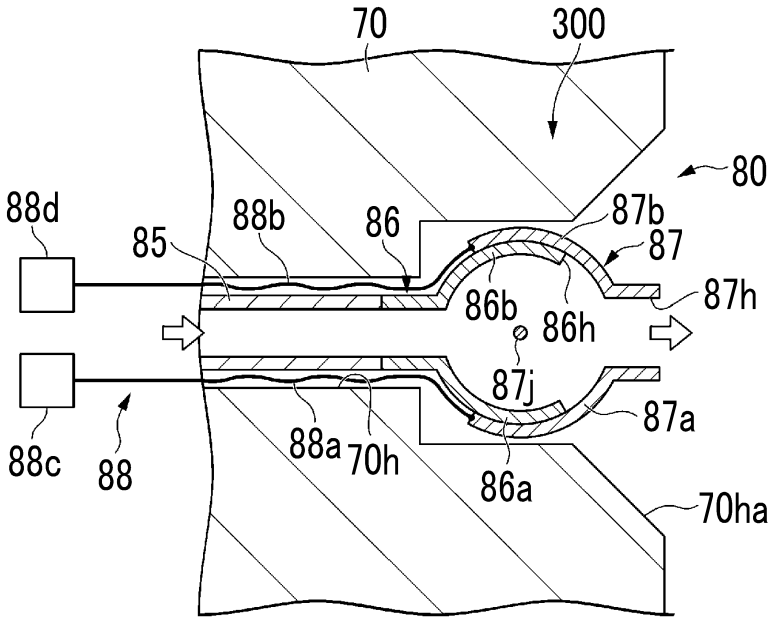
70
300
80
88d
85
88b
86
87b
87
87h
86b
86h
87j
87a
88c
88
88a
70h
86a
70ha

FIG. 4

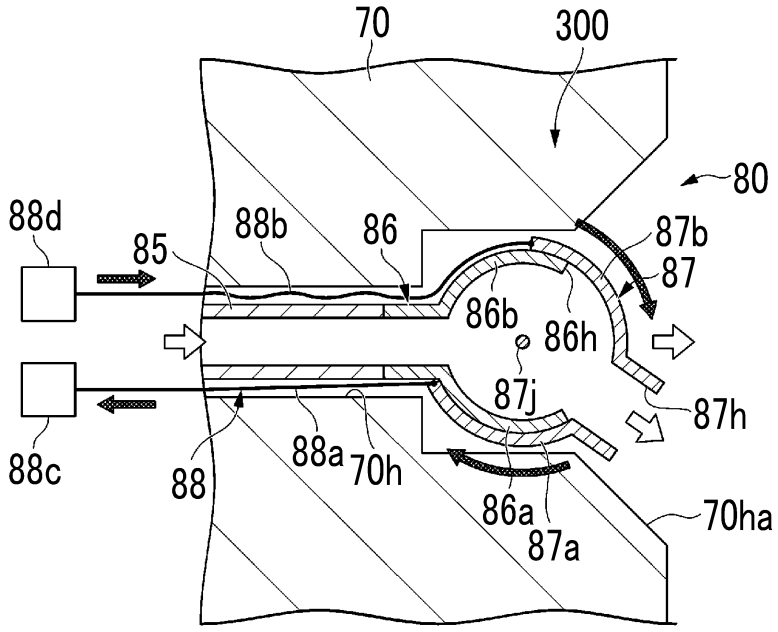

FIG. 5

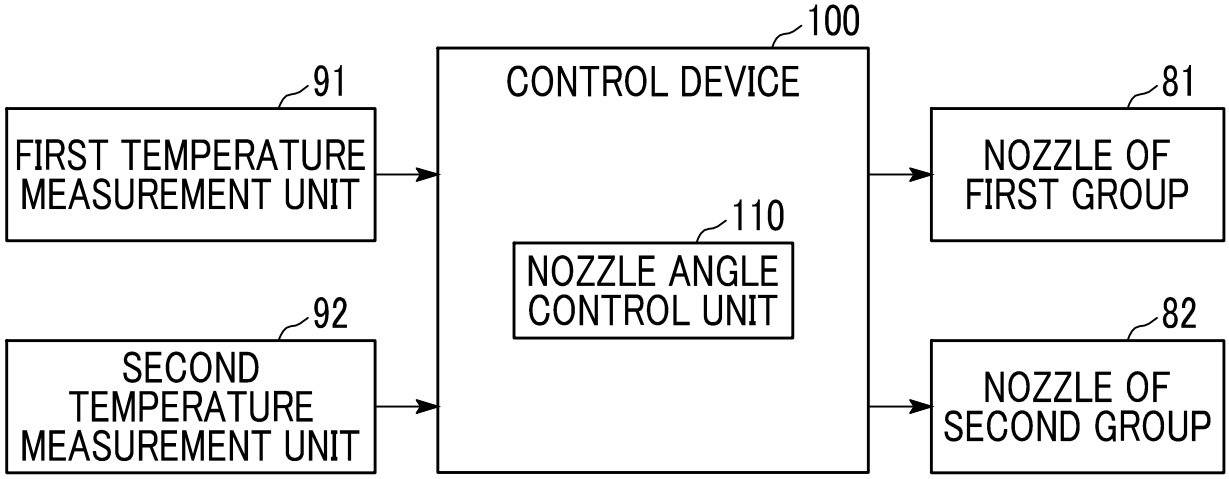

FIG. 6

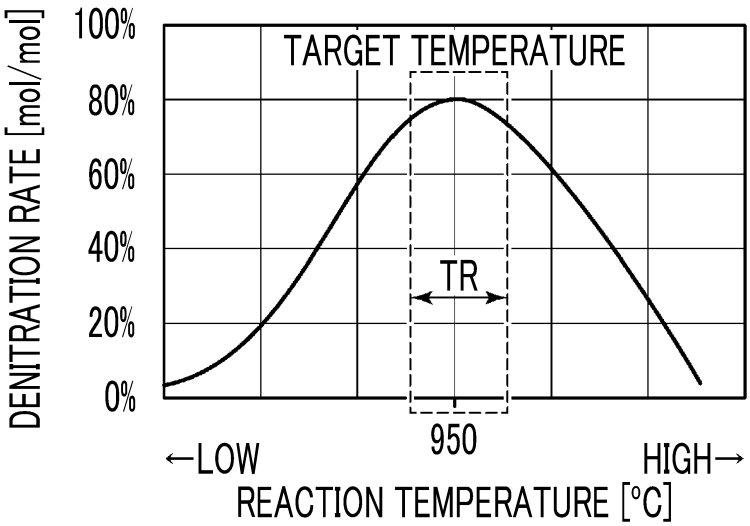

FIG. 7

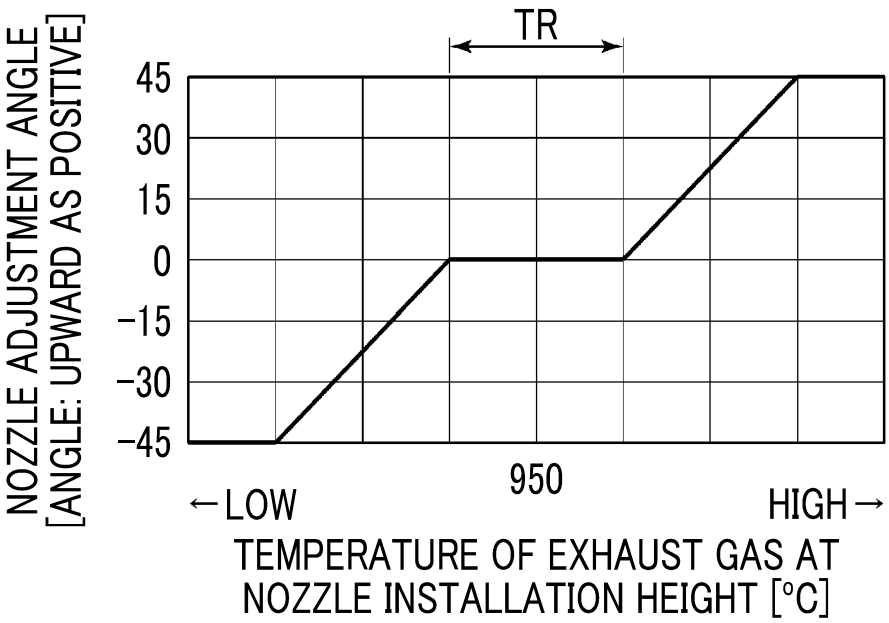
TR
NOZZLE ADJUSTMENT ANGLE [ANGLE: UPWARD AS POSITIVE]
45
30
15
0
-15
-30
-45
950
←LOW
HIGH→
TEMPERATURE OF EXHAUST GAS AT NOZZLE INSTALLATION HEIGHT [°C]

FIG. 8

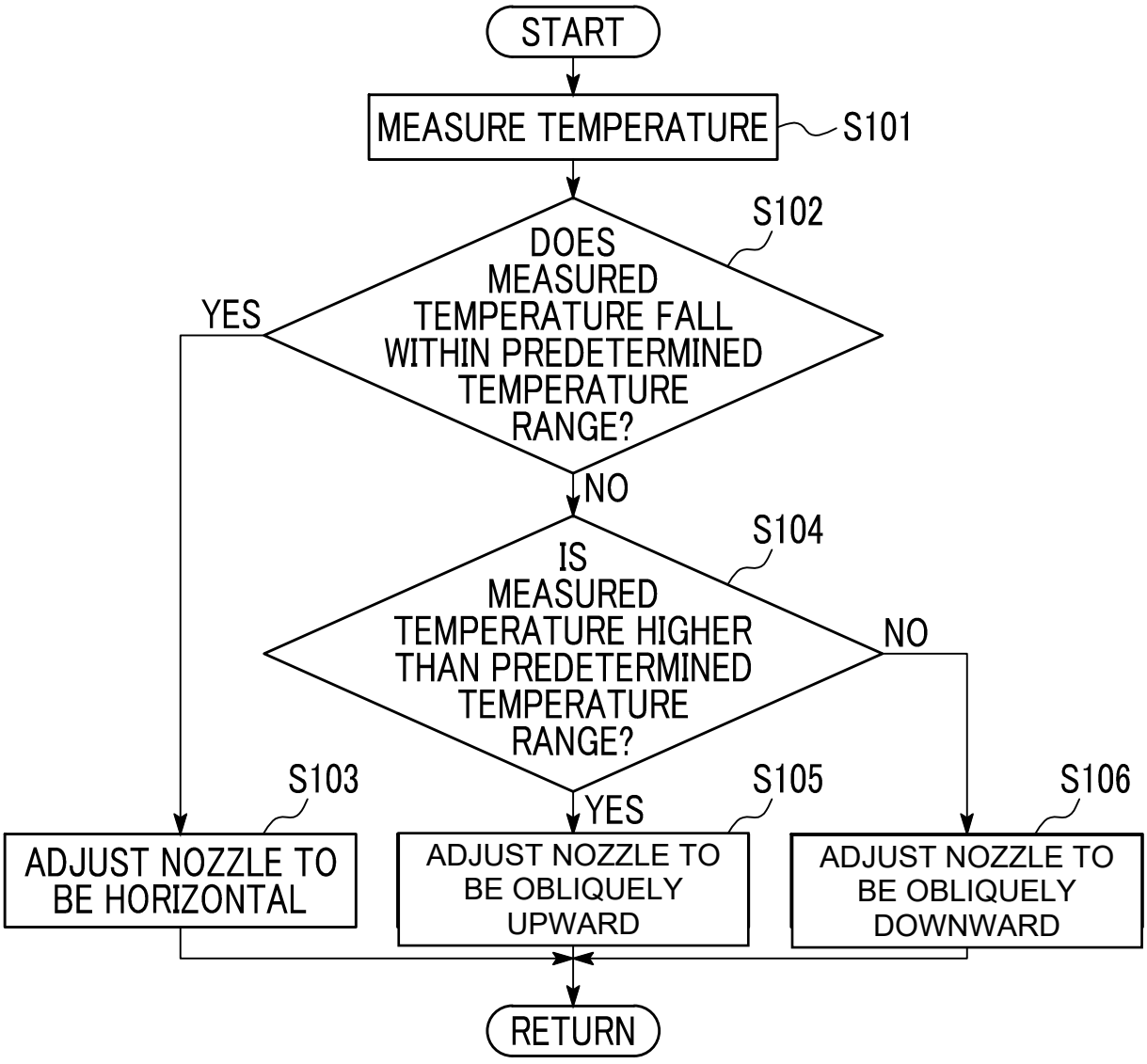
START
MEASURE TEMPERATURE
S101
S102
DOES MEASURED TEMPERATURE FALL WITHIN PREDETERMINED TEMPERATURE RANGE?
YES
NO
S104
IS MEASURED TEMPERATURE HIGHER THAN PREDETERMINED TEMPERATURE RANGE?
NO
YES
S103
S105
S106
ADJUST NOZZLE TO BE HORIZONTAL
ADJUST NOZZLE TO BE OBLIQUELY UPWARD
ADJUST NOZZLE TO BE OBLIQUELY DOWNWARD
RETURN

FIG. 9

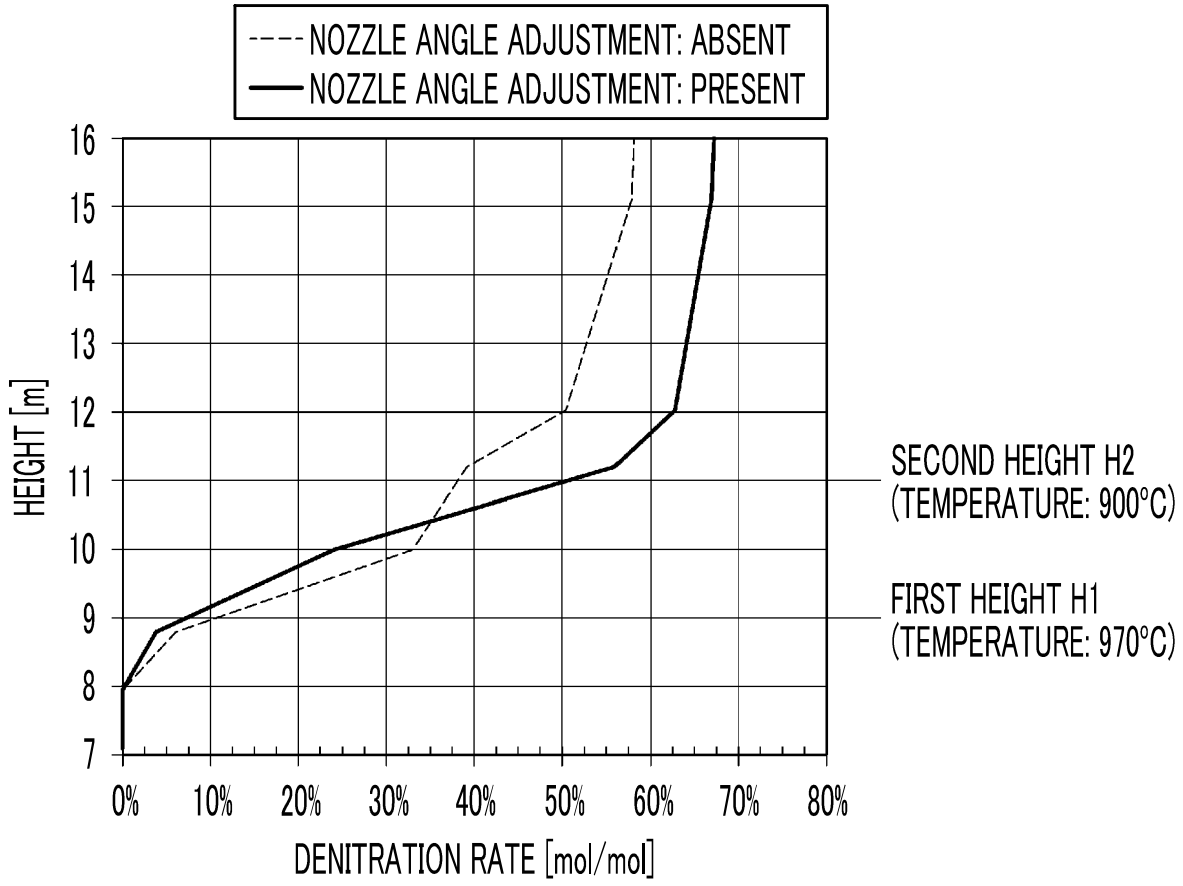
NOZZLE ANGLE ADJUSTMENT: ABSENT
NOZZLE ANGLE ADJUSTMENT: PRESENT
HEIGHT [m]
16
15
14
13
12
11
10
9
8
7
0%
10%
20%
30%
40%
50%
60%
70%
80%
DENITRATION RATE [mol/mol]
SECOND HEIGHT H2
(TEMPERATURE: 900°C)
FIRST HEIGHT H1
(TEMPERATURE: 970°C)

FIG. 10

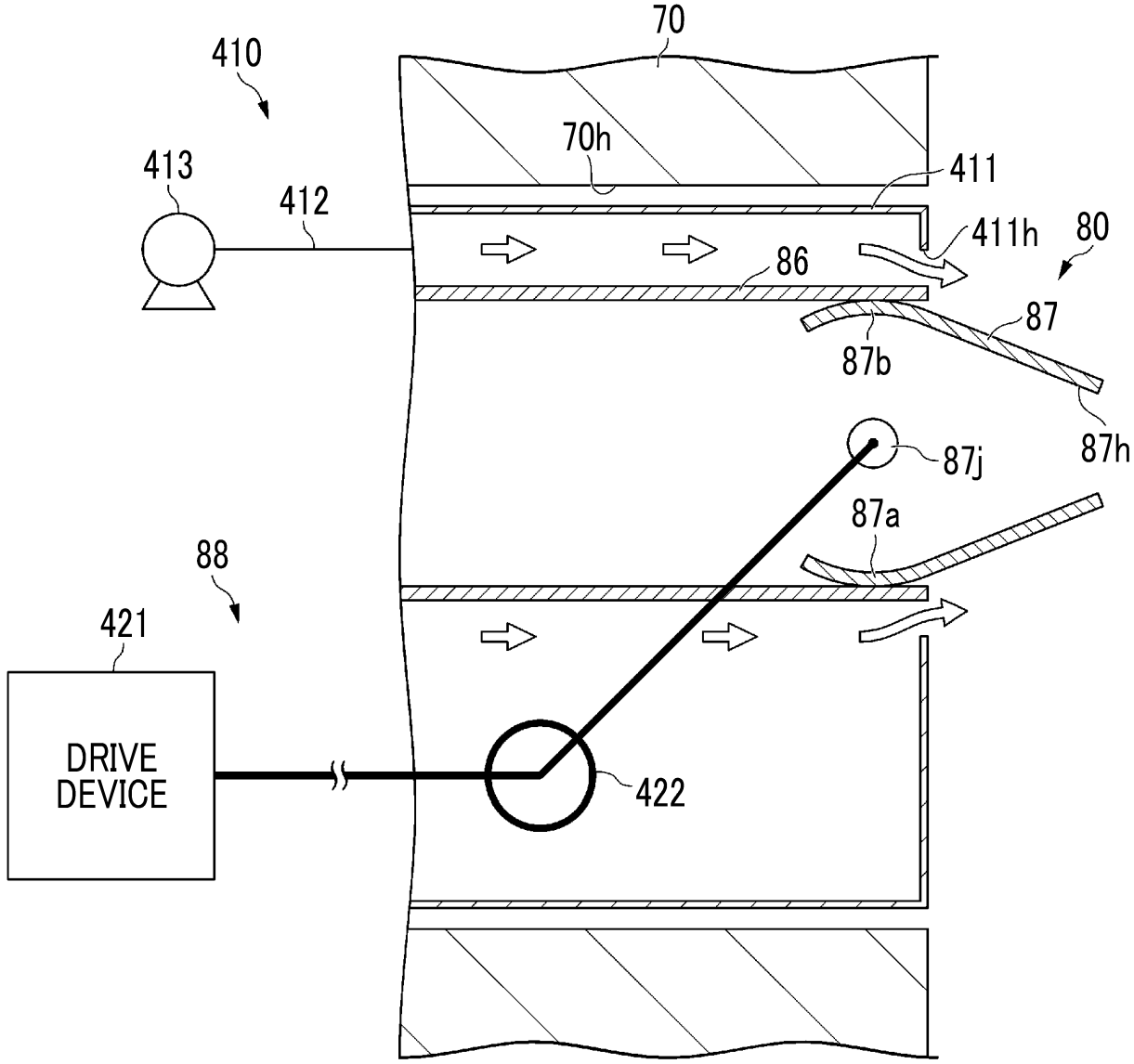
70
410
70h
413
411
412
411h
80
86
87
87b
87h
87j
87a
88
421
DRIVE DEVICE
422

FIG. 11

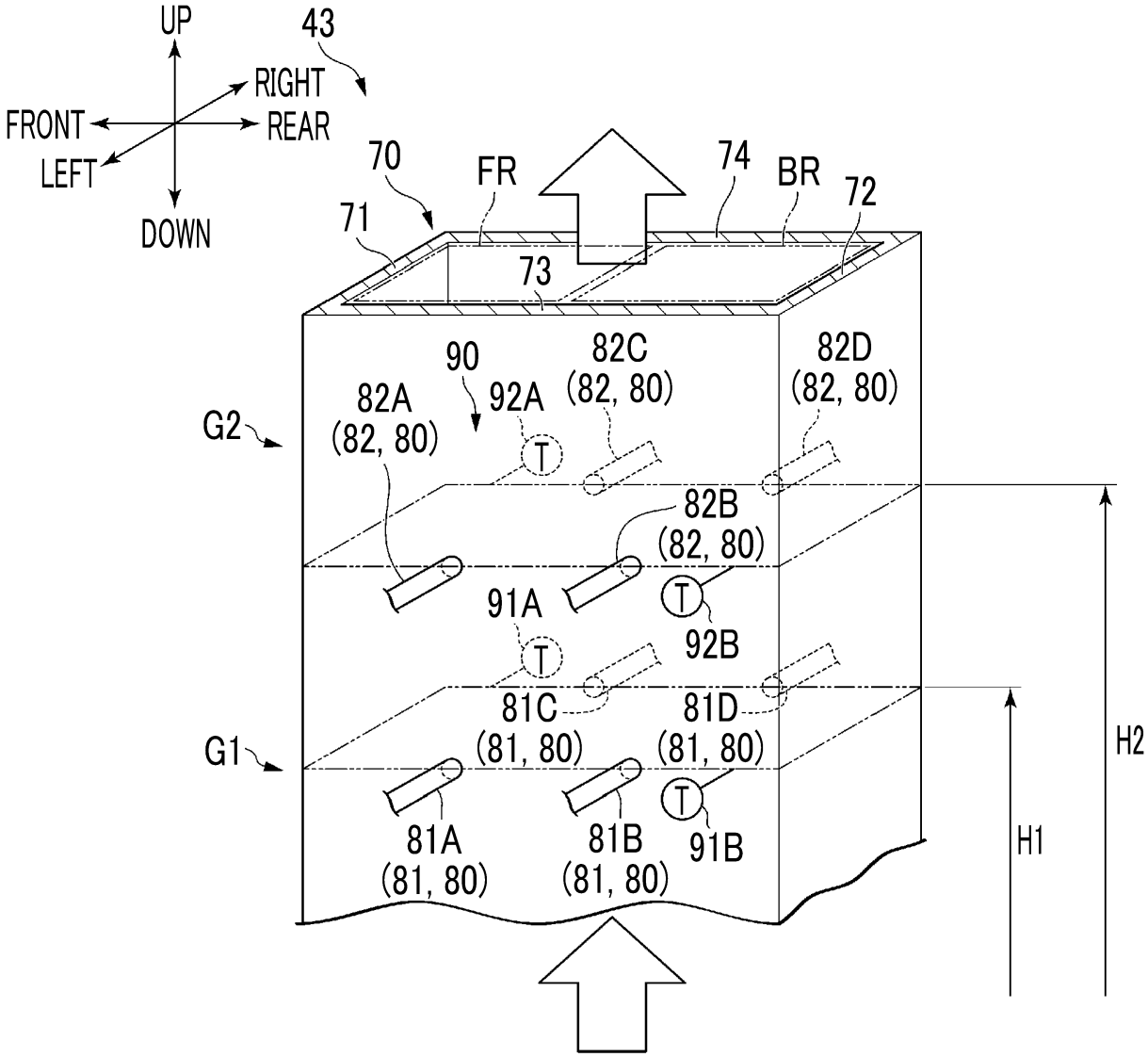
UP
43
RIGHT
FRONT
REAR
LEFT
DOWN
70
FR
74
BR
72
71
73
90
82C
(82, 80)
82D
(82, 80)
82A
(82, 80)
92A
G2
82B
(82, 80)
91A
92B
81C
(81, 80)
81D
(81, 80)
G1
H2
H1
81A
(81, 80)
81B
(81, 80)
91B

FIG. 12

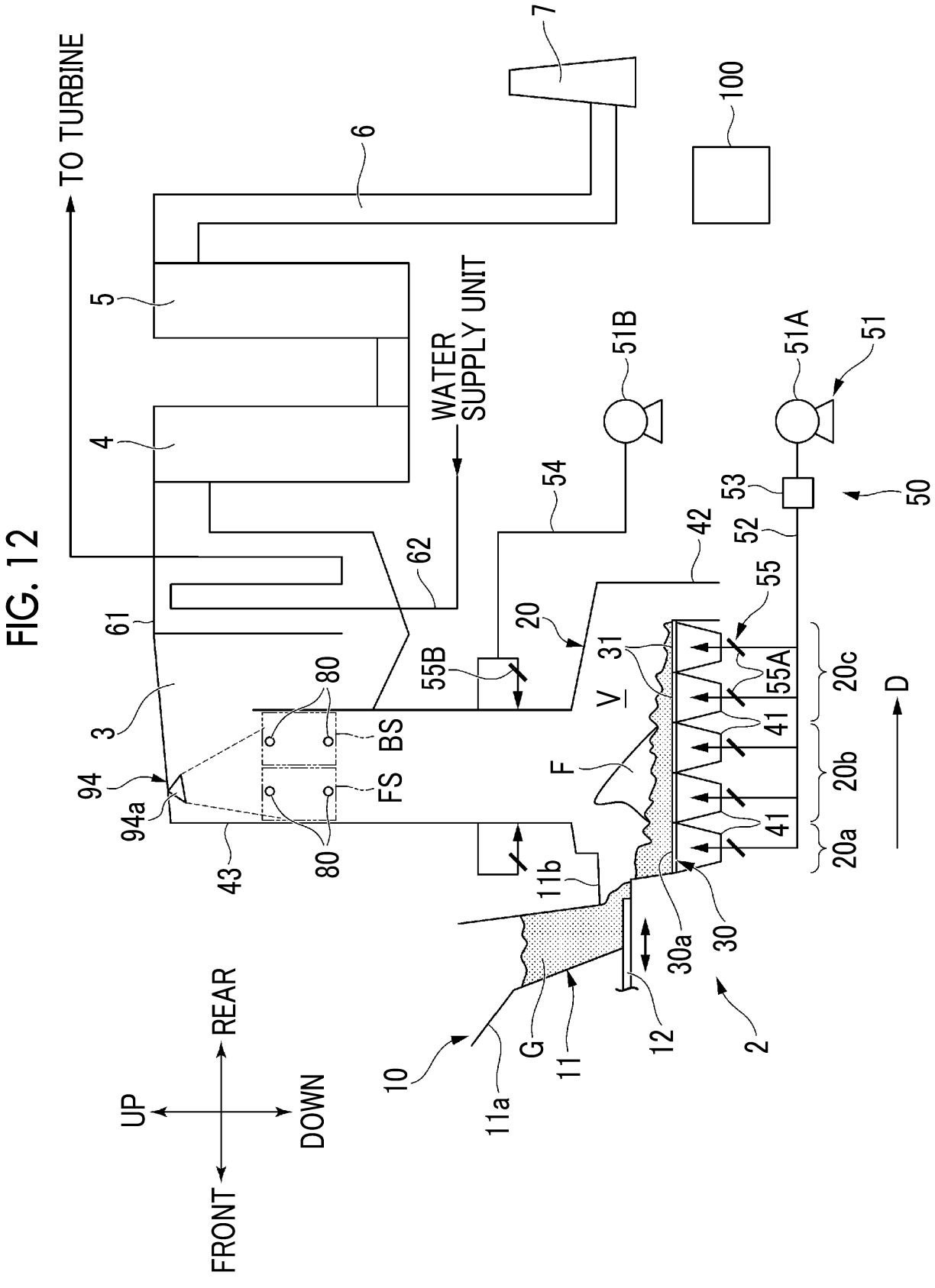
TO TURBINE
WATER SUPPLY UNIT
UP
DOWN
FRONT
REAR
D
V
F
G
BS
FS
2
3
4
5
6
7
10
11
11a
11b
12
20
20a
20b
20c
30
30a
31
41
42
43
50
51
51A
51B
52
53
54
55
55A
55B
61
62
80
94
94a
100

FIG. 13

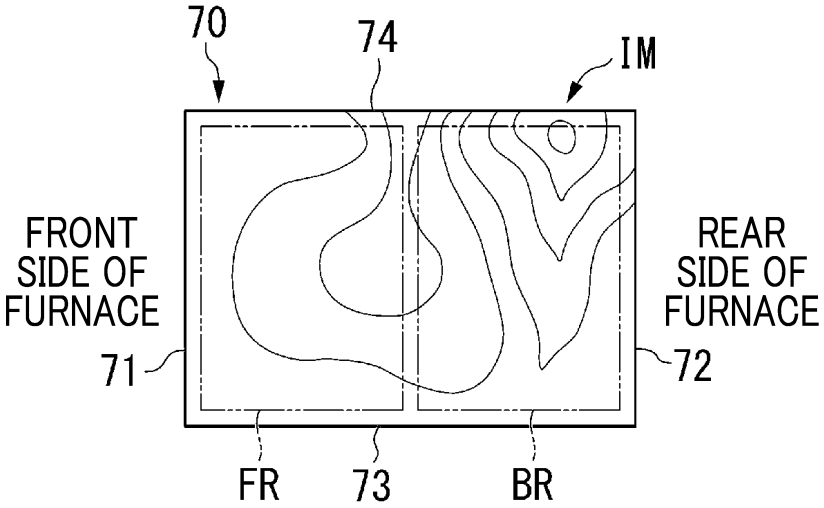
70
74
IM
FRONT SIDE OF FURNACE
REAR SIDE OF FURNACE
71
72
FR
73
BR

FIG. 14

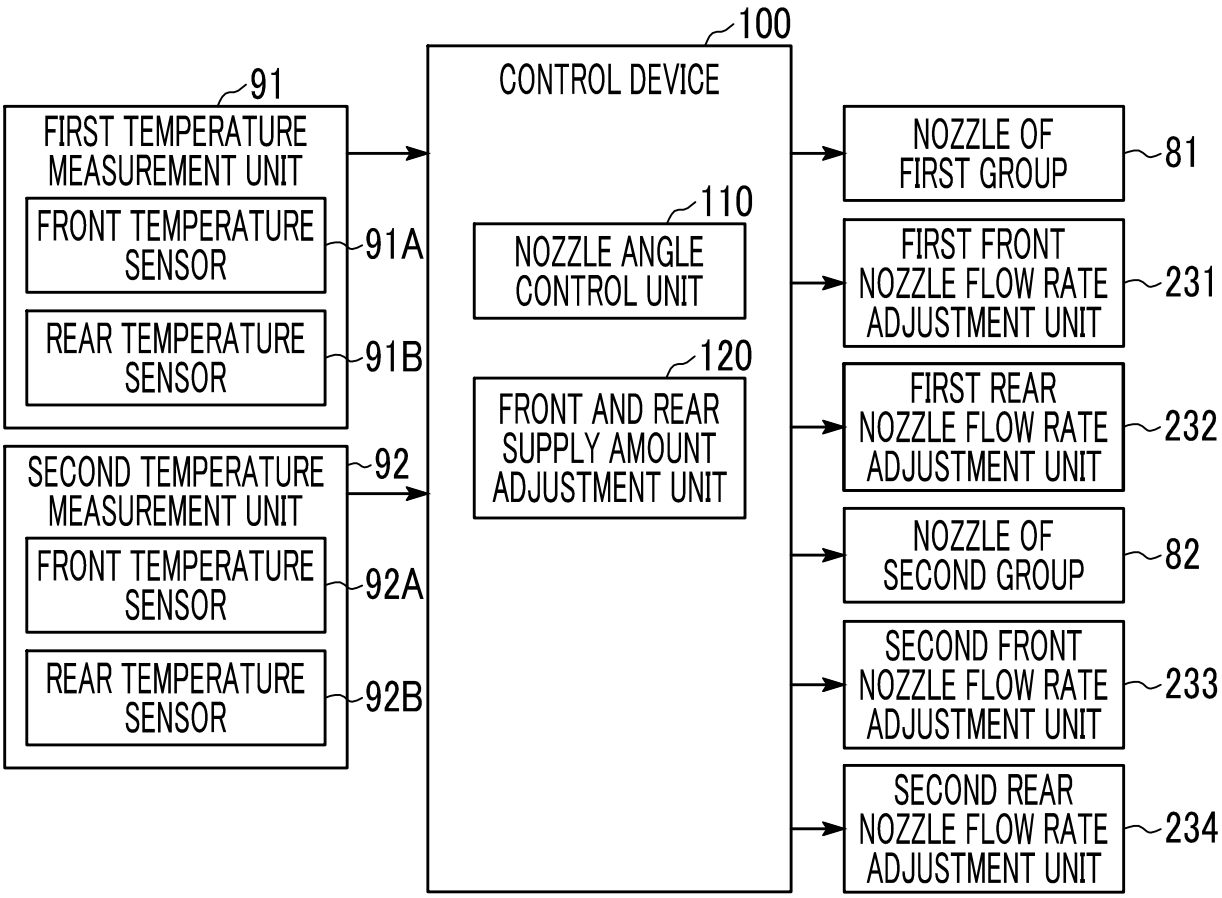
100
CONTROL DEVICE
91
FIRST TEMPERATURE MEASUREMENT UNIT
FRONT TEMPERATURE SENSOR
91A
REAR TEMPERATURE SENSOR
91B
SECOND TEMPERATURE MEASUREMENT UNIT
92
FRONT TEMPERATURE SENSOR
92A
REAR TEMPERATURE SENSOR
92B
110
NOZZLE ANGLE CONTROL UNIT
120
FRONT AND REAR SUPPLY AMOUNT ADJUSTMENT UNIT
NOZZLE OF FIRST GROUP
81
FIRST FRONT NOZZLE FLOW RATE ADJUSTMENT UNIT
231
FIRST REAR NOZZLE FLOW RATE ADJUSTMENT UNIT
232
NOZZLE OF SECOND GROUP
82
SECOND FRONT NOZZLE FLOW RATE ADJUSTMENT UNIT
233
SECOND REAR NOZZLE FLOW RATE ADJUSTMENT UNIT
234

FIG. 15

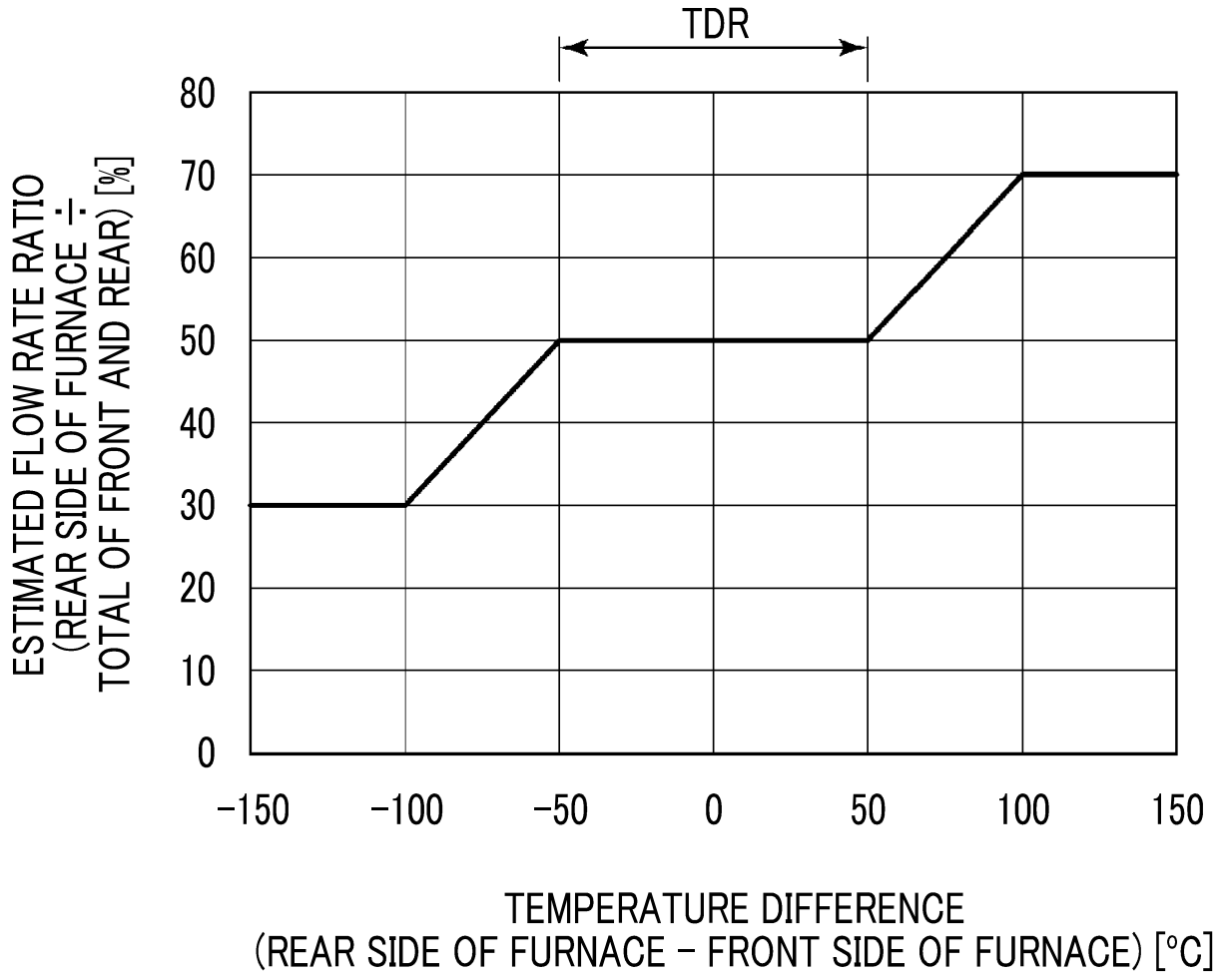
TDR
80
70
60
50
40
30
20
10
0
ESTIMATED FLOW RATE RATIO
(REAR SIDE OF FURNACE ÷
TOTAL OF FRONT AND REAR) [%]
−150
−100
−50
0
50
100
150
TEMPERATURE DIFFERENCE
(REAR SIDE OF FURNACE − FRONT SIDE OF FURNACE) [°C]

FIG. 16

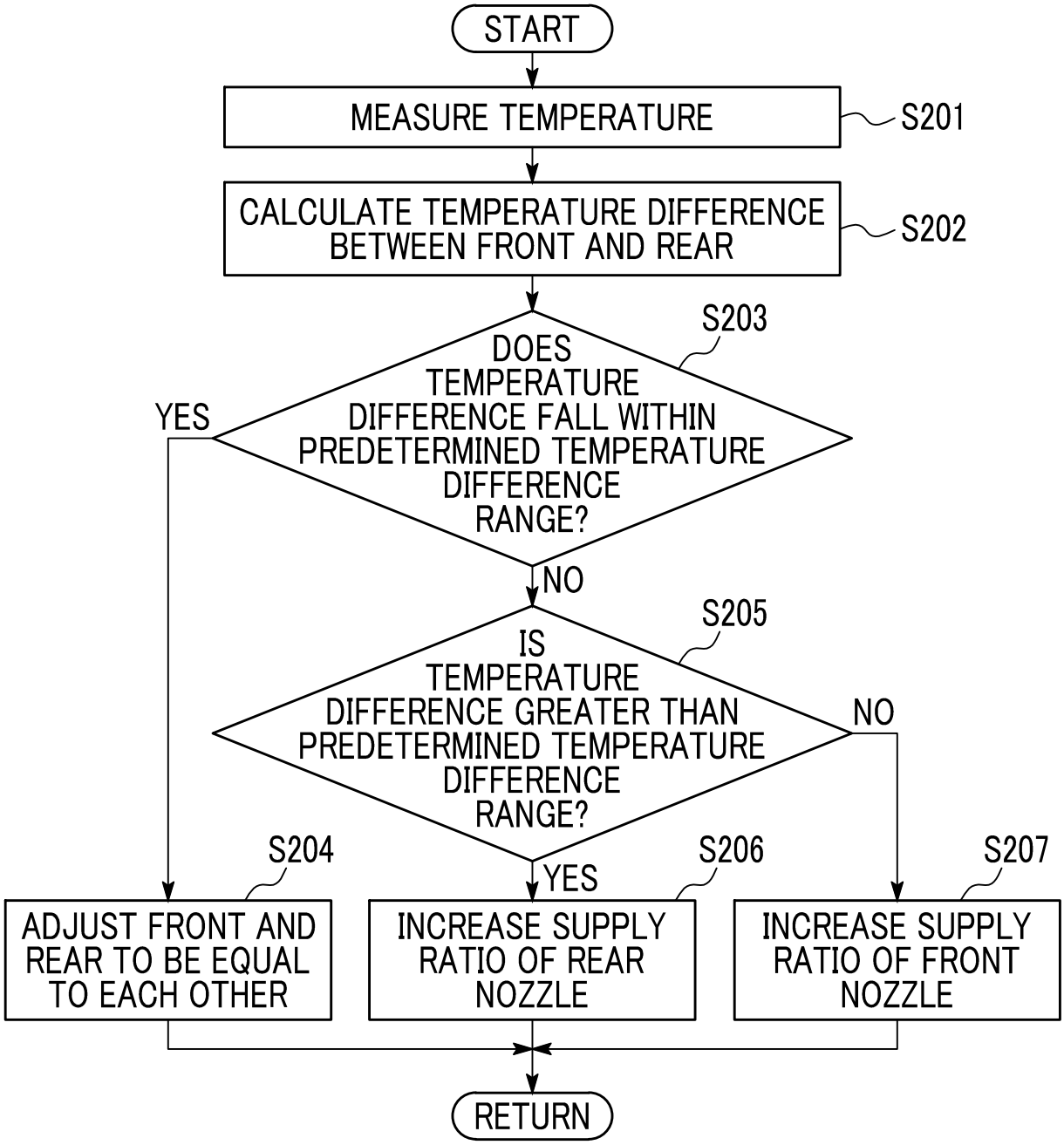
START
MEASURE TEMPERATURE
S201
CALCULATE TEMPERATURE DIFFERENCE BETWEEN FRONT AND REAR
S202
S203
DOES TEMPERATURE DIFFERENCE FALL WITHIN PREDETERMINED TEMPERATURE DIFFERENCE RANGE?
YES
NO
S205
IS TEMPERATURE DIFFERENCE GREATER THAN PREDETERMINED TEMPERATURE DIFFERENCE RANGE?
NO
YES
S204
ADJUST FRONT AND REAR TO BE EQUAL TO EACH OTHER
S206
INCREASE SUPPLY RATIO OF REAR NOZZLE
S207
INCREASE SUPPLY RATIO OF FRONT NOZZLE
RETURN

FIG. 17

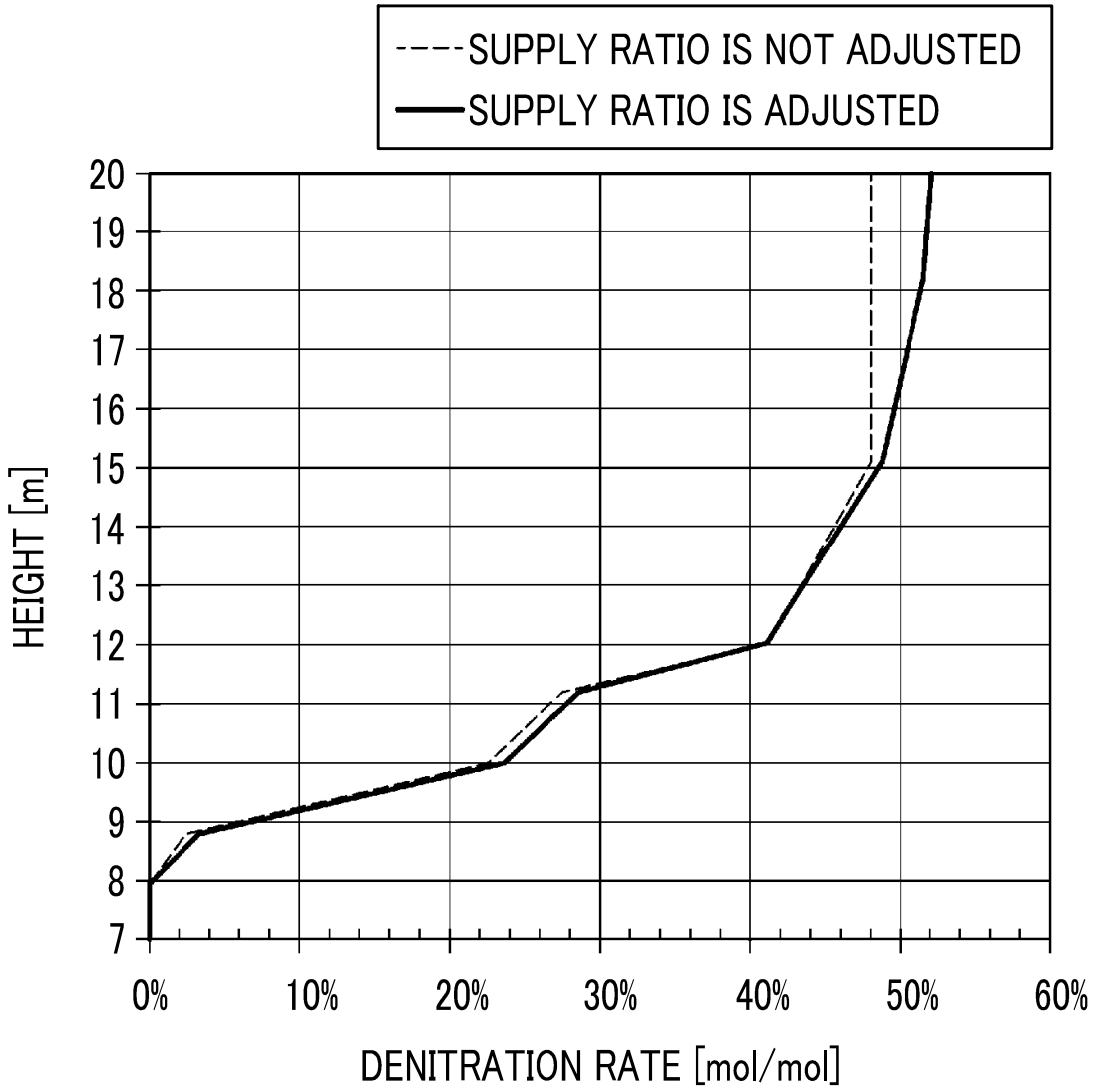
SUPPLY RATIO IS NOT ADJUSTED
SUPPLY RATIO IS ADJUSTED
HEIGHT [m]
20
19
18
17
16
15
14
13
12
11
10
9
8
7
0%
10%
20%
30%
40%
50%
60%
DENITRATION RATE [mol/mol]

FIG. 18

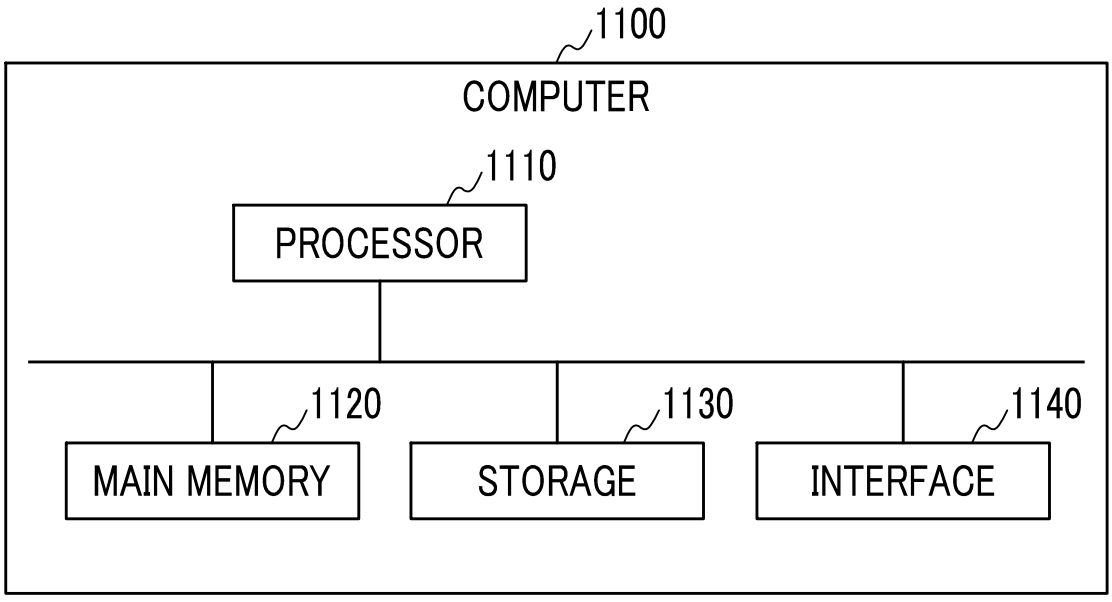
1100
COMPUTER
1110
PROCESSOR
1120
MAIN MEMORY
1130
STORAGE
1140
INTERFACE