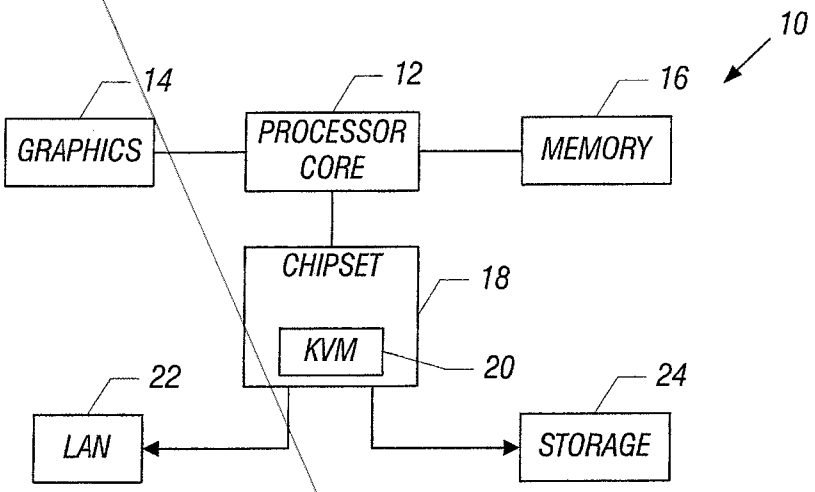
10
14
12
16
GRAPHICS
PROCESSOR CORE
MEMORY
CHIPSET
18
KVM
20
22
24
LAN
STORAGE

FIG. 1

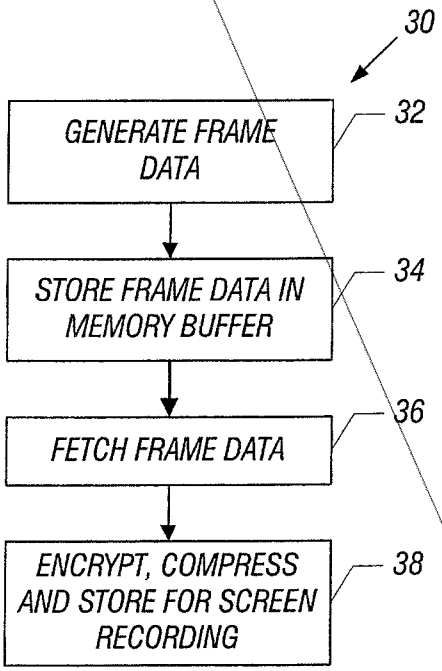
30
GENERATE FRAME DATA
32
STORE FRAME DATA IN MEMORY BUFFER
34
FETCH FRAME DATA
36
ENCRYPT, COMPRESS AND STORE FOR SCREEN RECORDING
38

FIG. 2

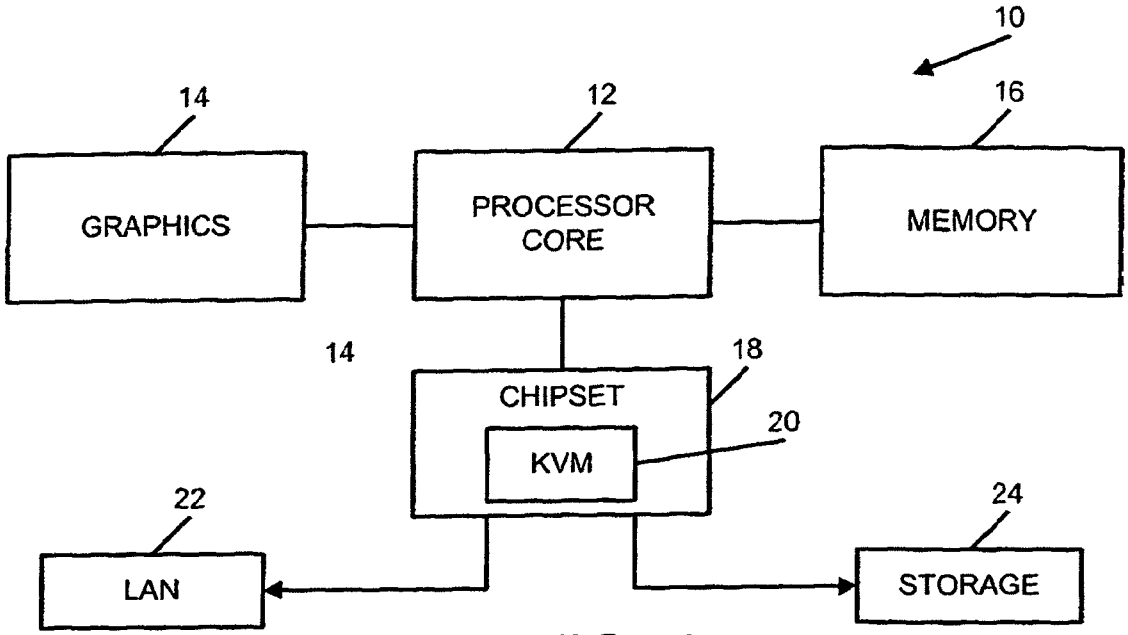
10
14
12
16
GRAPHICS
PROCESSOR CORE
MEMORY
14
18
CHIPSET
20
KVM
22
24
LAN
STORAGE

FIG. 1

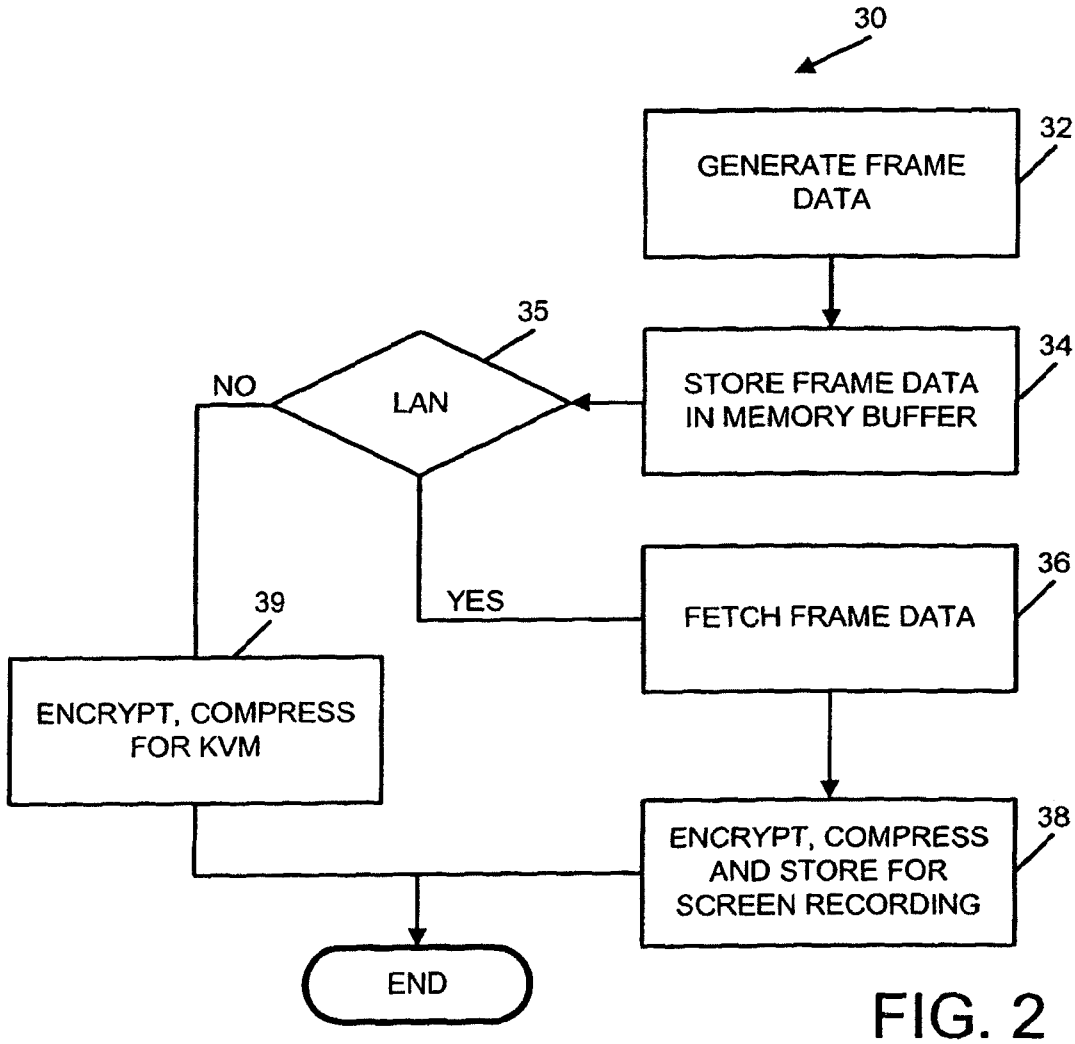
30
GENERATE FRAME DATA
32
35
NO
LAN
STORE FRAME DATA IN MEMORY BUFFER
34
YES
FETCH FRAME DATA
36
39
ENCRYPT, COMPRESS FOR KVM
ENCRYPT, COMPRESS AND STORE FOR SCREEN RECORDING
38
END

FIG. 2