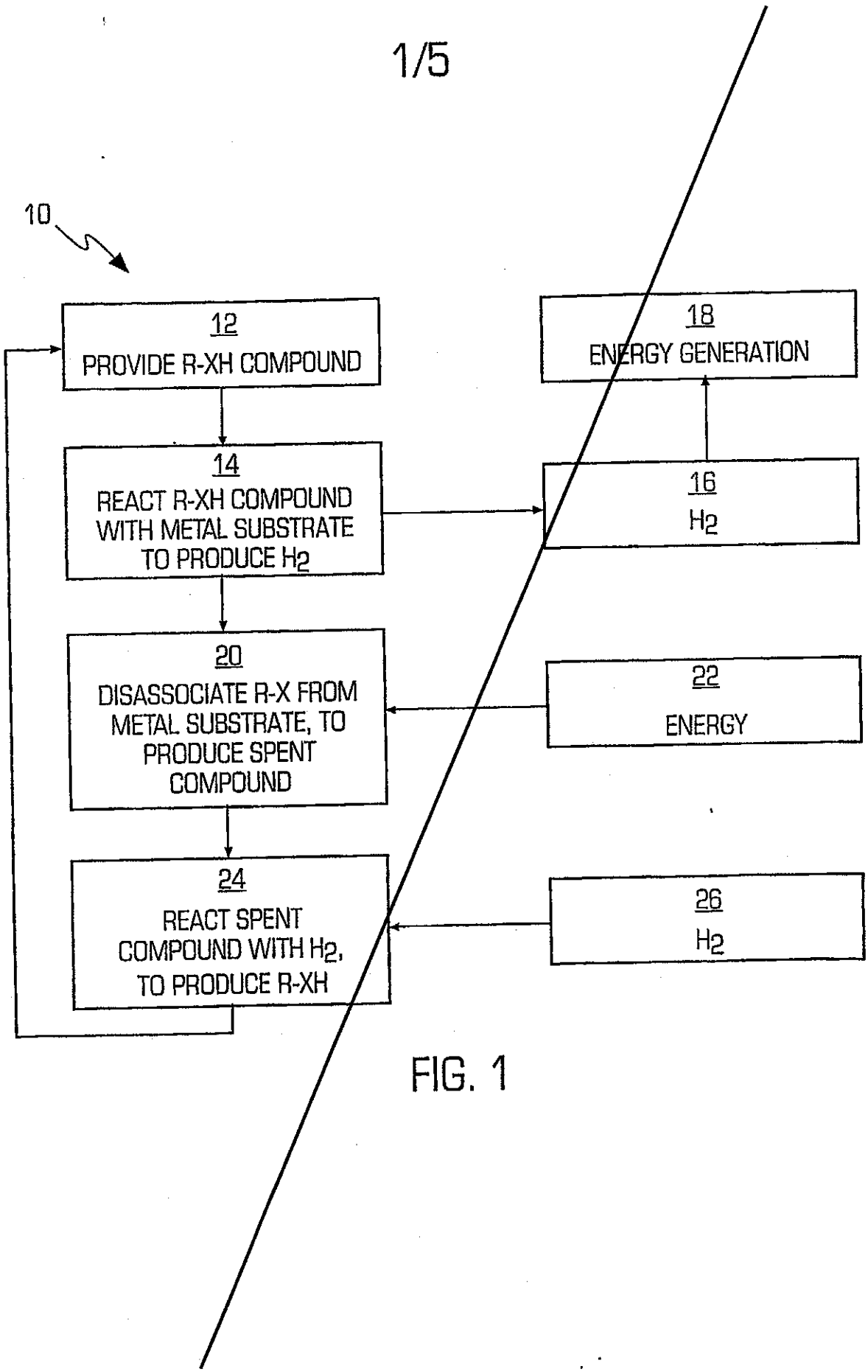
10
12
PROVIDE R-XH COMPOUND
14
REACT R-XH COMPOUND WITH METAL SUBSTRATE TO PRODUCE H2
20
DISASSOCIATE R-X FROM METAL SUBSTRATE, TO PRODUCE SPENT COMPOUND
24
REACT SPENT COMPOUND WITH H2, TO PRODUCE R-XH
18
ENERGY GENERATION
16
H2
22
ENERGY
26
H2

FIG. 1

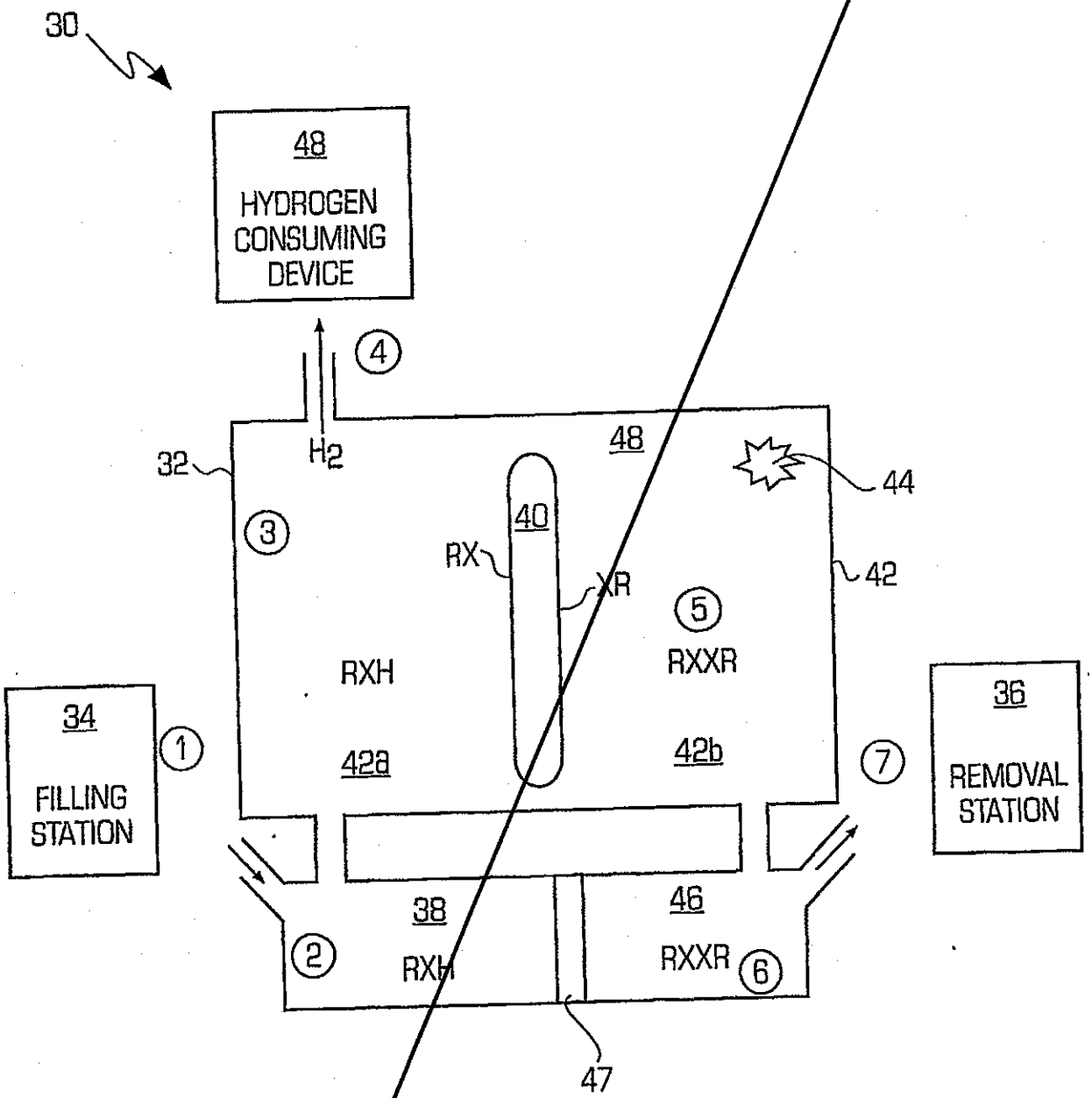
30
48
HYDROGEN CONSUMING DEVICE
4
H2
32
48
44
40
RX
XR
42
3
5
RXH
RXXR
34
FILLING STATION
1
42a
42b
7
36
REMOVAL STATION
38
46
2
RXH
RXXR
6
47

FIG. 2

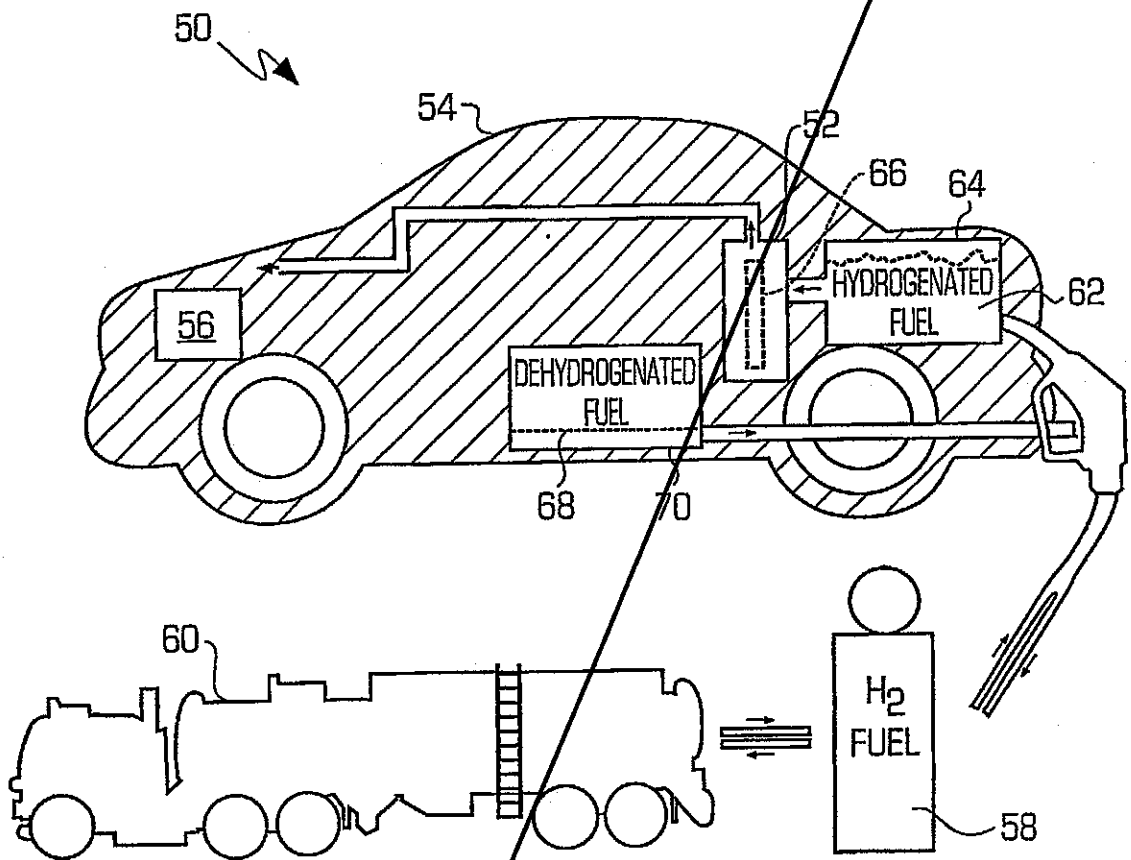
50
54
52
66
64
HYDROGENATED FUEL
62
56
DEHYDROGENATED FUEL
68
70
60
H_2 FUEL
58

FIG. 3

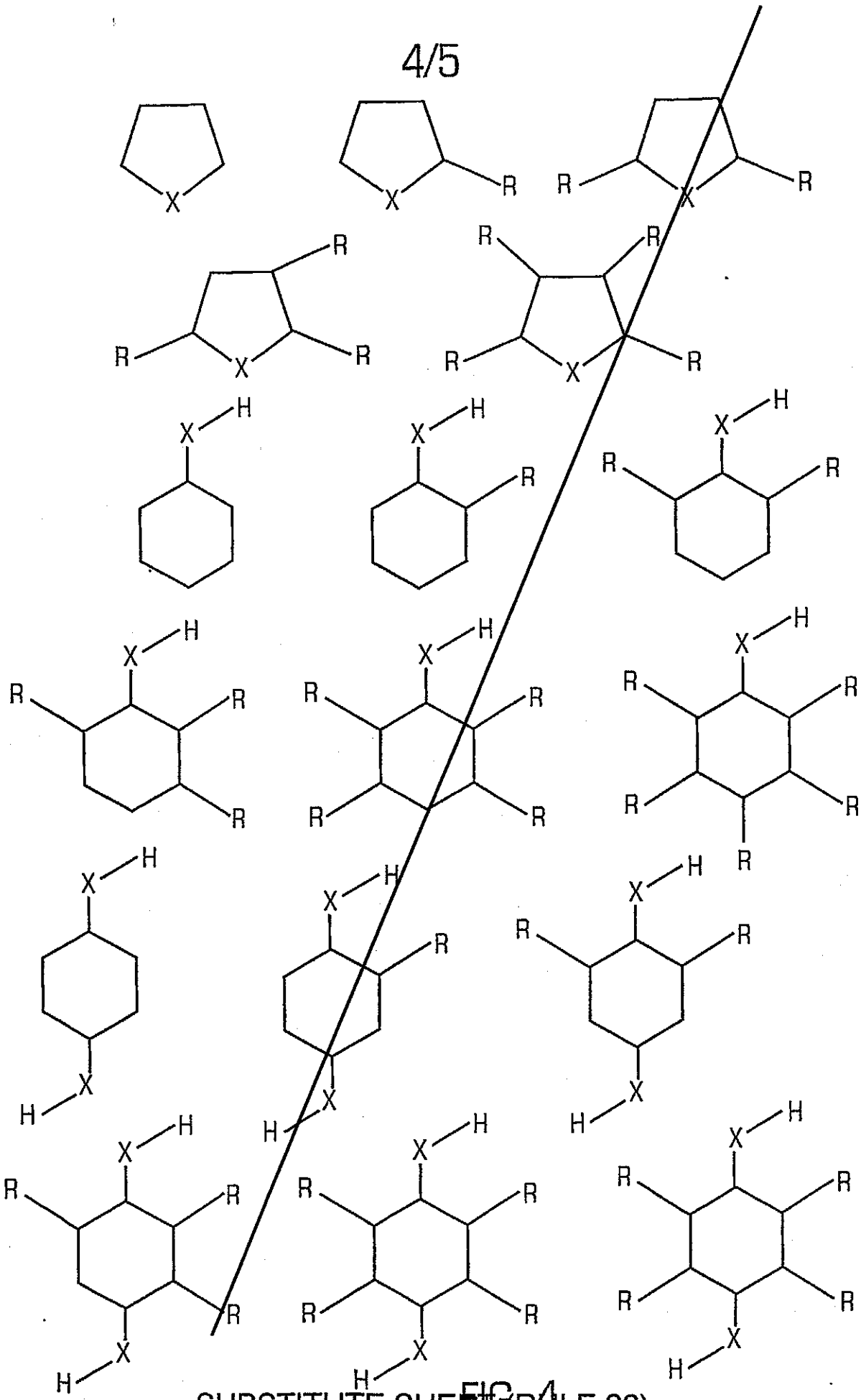

FIG. 4

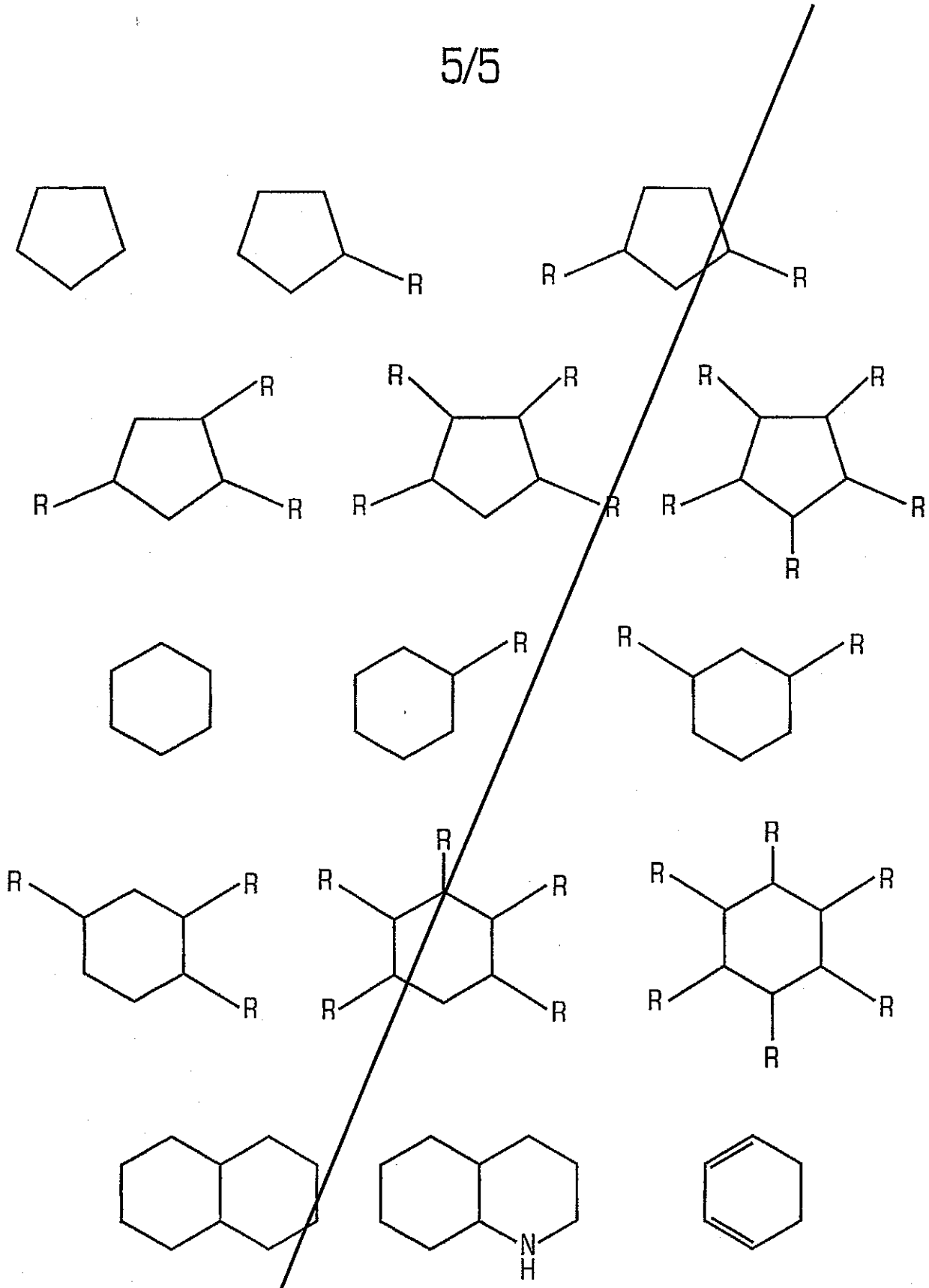

FIG. 5

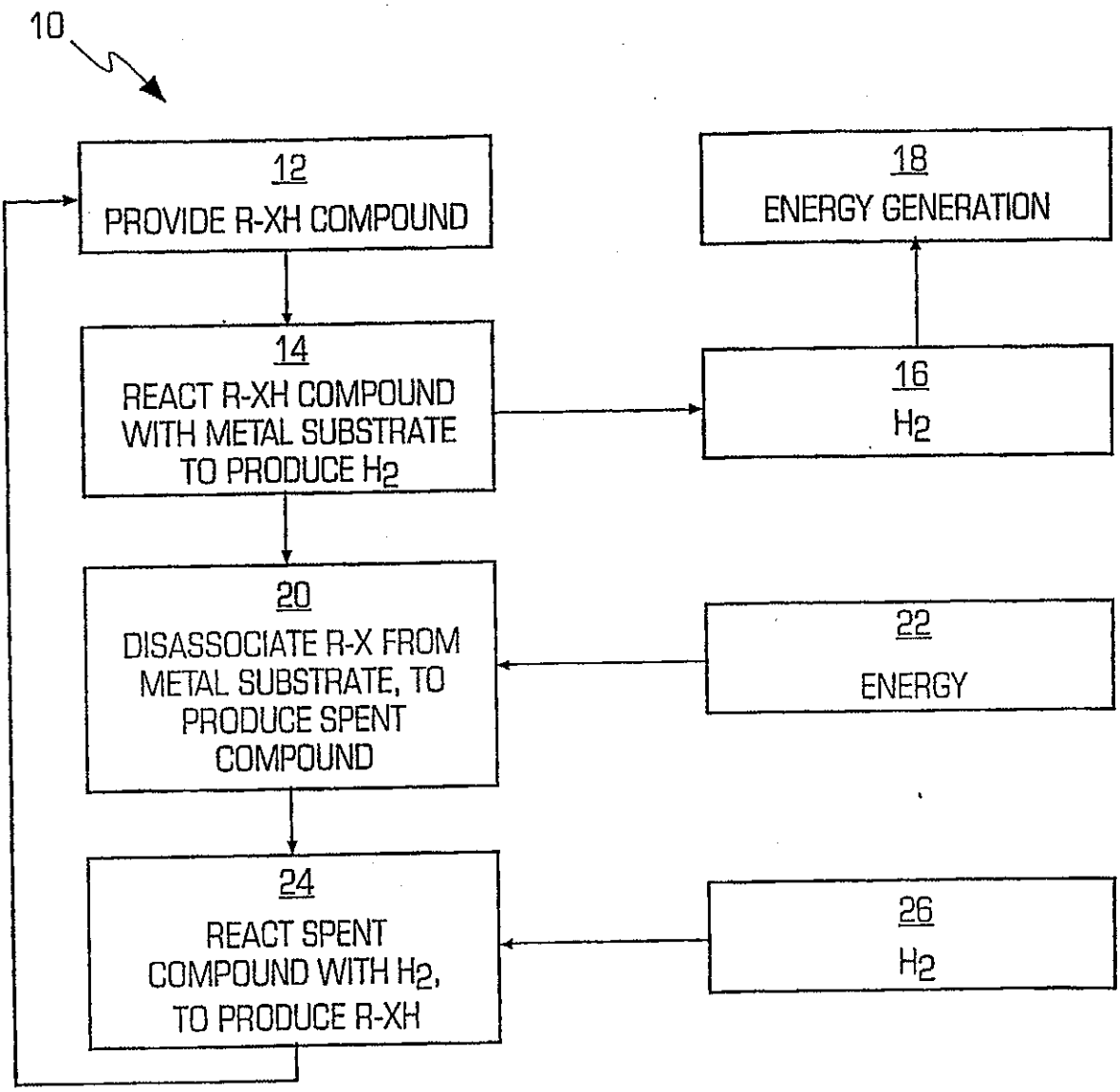
10
12
PROVIDE R-XH COMPOUND
14
REACT R-XH COMPOUND WITH METAL SUBSTRATE TO PRODUCE H2
16
H2
18
ENERGY GENERATION
20
DISASSOCIATE R-X FROM METAL SUBSTRATE, TO PRODUCE SPENT COMPOUND
22
ENERGY
24
REACT SPENT COMPOUND WITH H2, TO PRODUCE R-XH
26
H2

FIG. 1

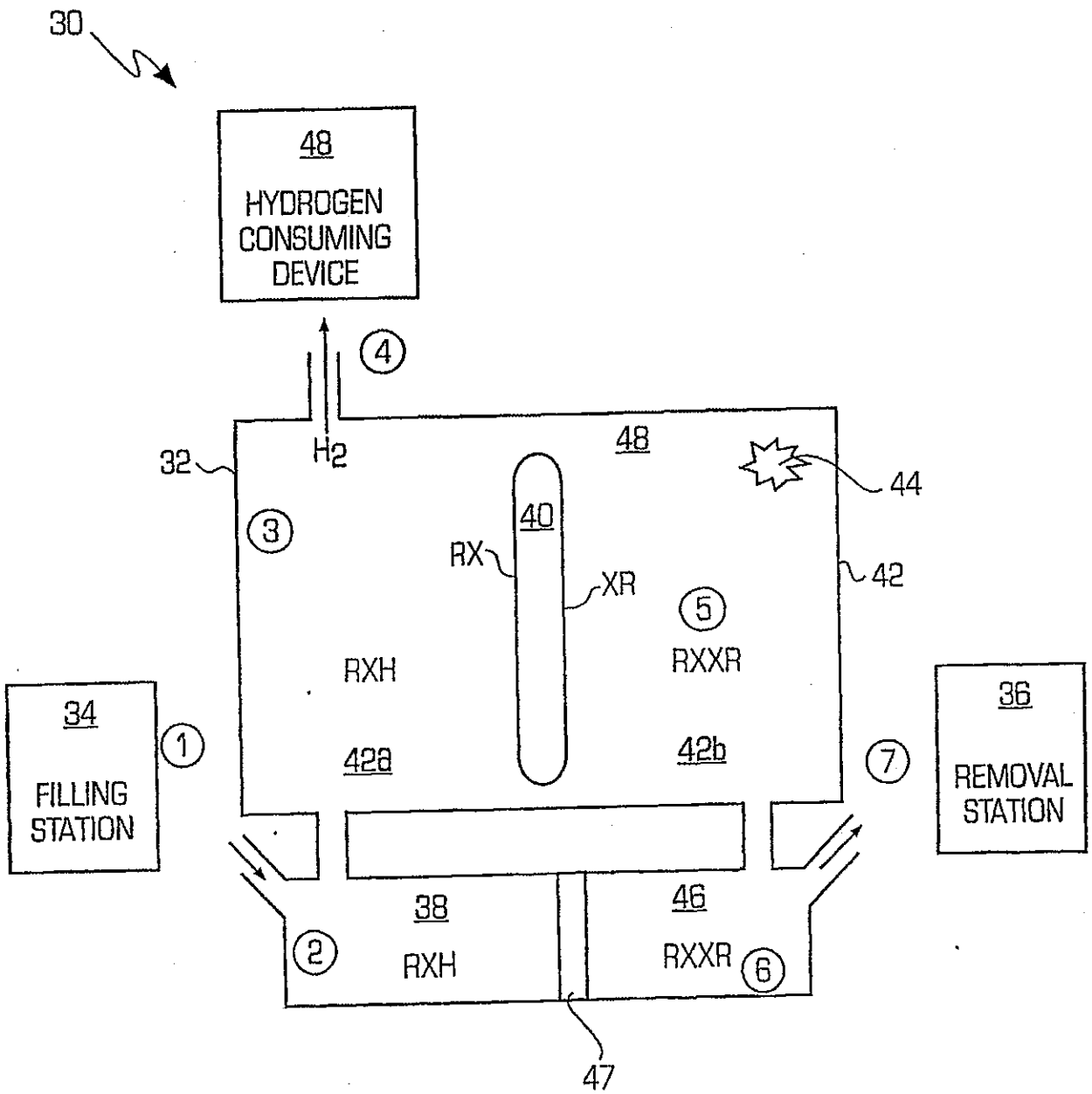
30
48
HYDROGEN CONSUMING DEVICE
4
H2
32
48
44
40
RX
XR
42
3
5
RXH
RXXR
34
FILLING STATION
1
428
42b
7
36
REMOVAL STATION
38
46
2
RXH
RXXR
6
47

FIG. 2

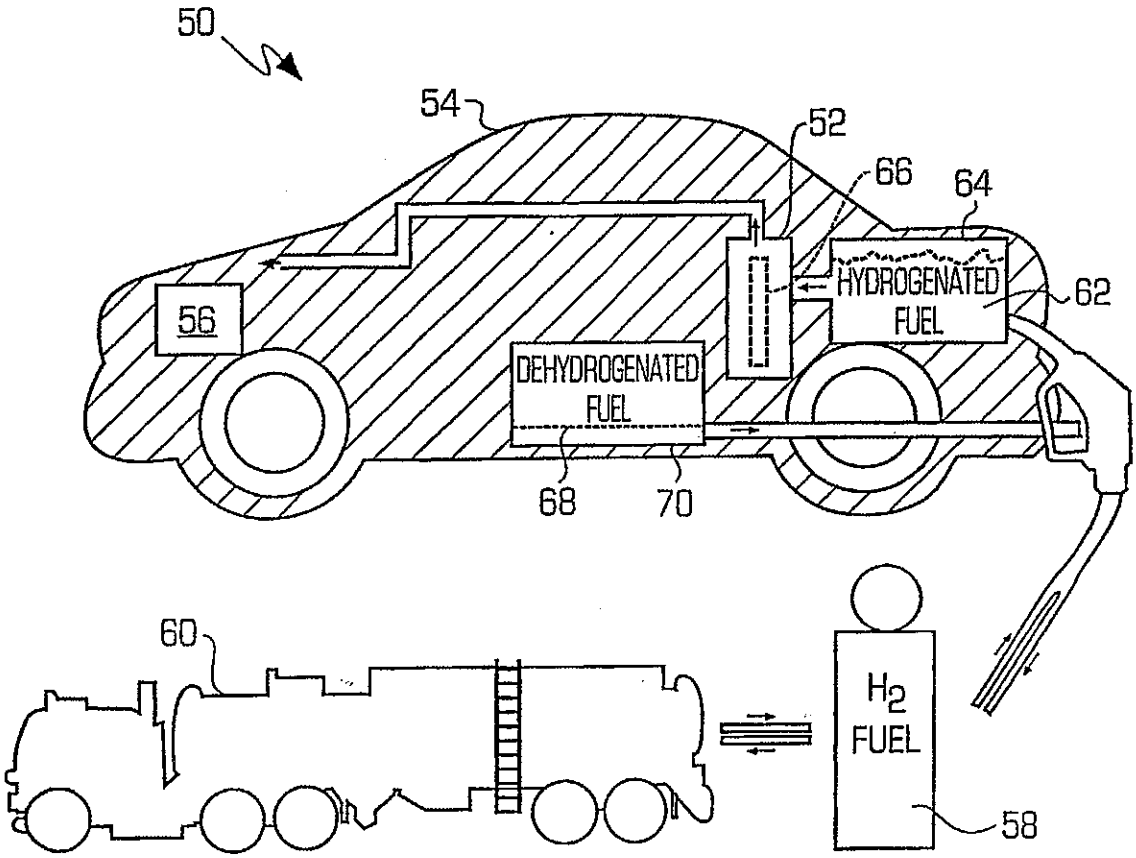
50
54
52
66
64
56
HYDROGENATED FUEL
62
DEHYDROGENATED FUEL
68
70
60
H_2 FUEL
58

FIG. 3

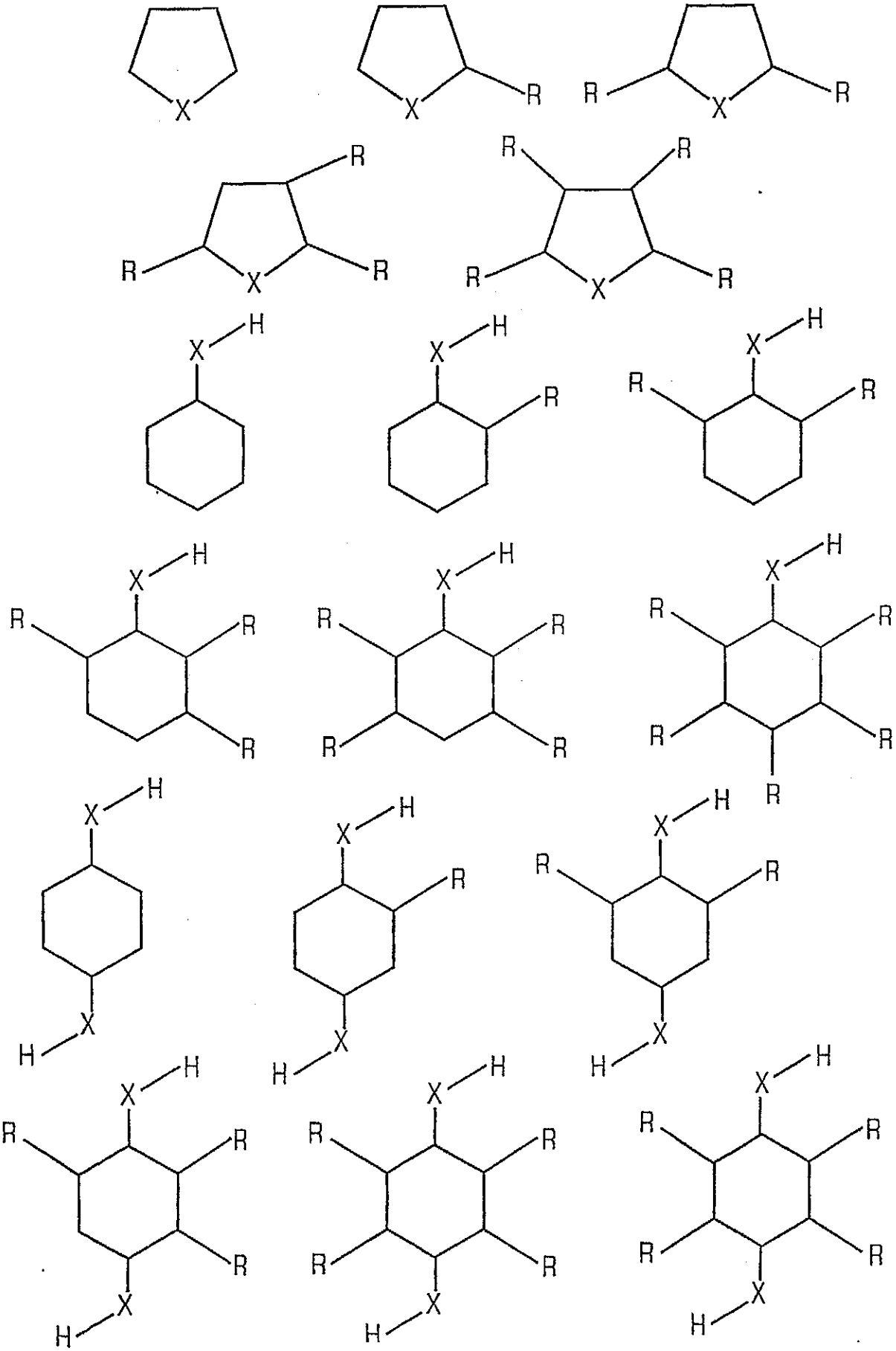

FIG.4

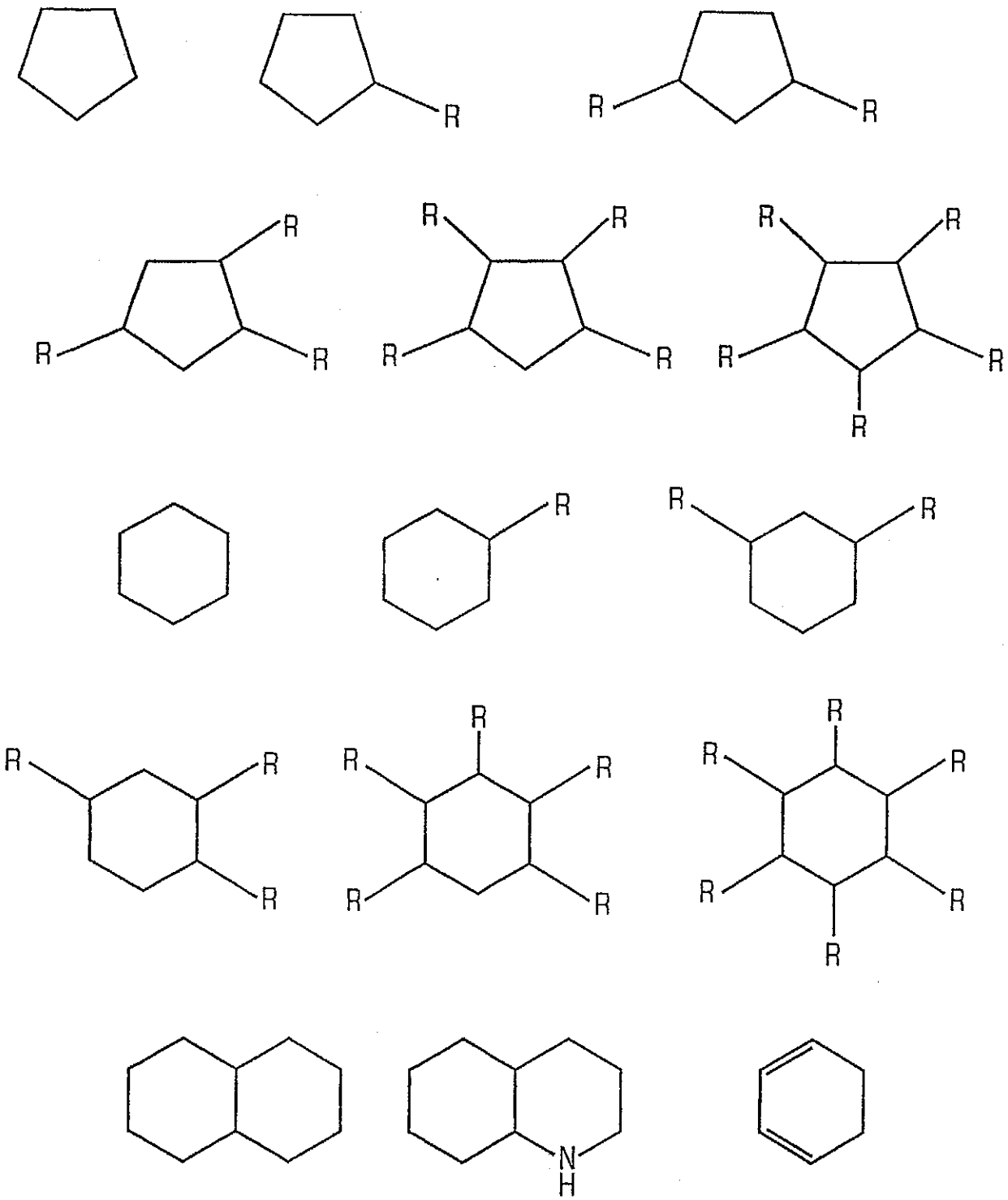

FIG. 5