(12) INTERNATIONAL APPLICATION PUBLISHED UNDER THE PATENT COOPERATION TREATY (PCT)

(19) World Intellectual Property Organization
International Bureau

(43) International Publication Date
15 February 2007 (15.02.2007)

PCT

(10) International Publication Number
WO 2007/017138 A1

(51) International Patent Classification:
G01M 11/02 (2006.01)

(21) International Application Number:
PCT/EP2006/007456

(22) International Filing Date: 27 July 2006 (27.07.2006)

(25) Filing Language: English

(26) Publication Language: English

(30) Priority Data:
05016546.3 29 July 2005 (29.07.2005) EP

(71) Applicant *(for all designated States except AT, US)*: **NOVARTIS AG** [CH/CH]; Lichtstrasse 35, CH-4056 Basel (CH).

(71) Applicant *(for AT only)*: **NOVARTIS PHARMA GMBH** [AT/AT]; Brunner Strasse 59, A-1230 Vienna (AT).

(72) Inventors; and

(75) Inventors/Applicants *(for US only)*: **SÜPPEL-ADRIAN, Christian** [DE/DE]; c/o Süppel-Adrian, Gisela, Hohbergstrasse 8, 63911 Klingenberg (DE). **KERN, Fabian** [DE/DE]; Am Krontal 15, 63868 Grosswallstadt (DE). **WOLF, Michael** [DE/DE]; Landgraf-Georg-Strasse 68, 64283 Darmstadt (DE). **HAGMANN, Peter** [DE/DE]; Justin Kirchgässner Strasse 2, 63906 Erlenbach am Main (DE).

(74) Agent: **LIPHARDT, Bernd**; Novartis AG, Corporate Intellectual Property, CH-4002 Basel (CH).

(81) Designated States *(unless otherwise indicated, for every kind of national protection available)*: AE, AG, AL, AM, AT, AU, AZ, BA, BB, BG, BR, BW, BY, BZ, CA, CH, CN, CO, CR, CU, CZ, DE, DK, DM, DZ, EC, EE, EG, ES, FI, GB, GD, GE, GH, GM, HN, HR, HU, ID, IL, IN, IS, JP, KE, KG, KM, KN, KP, KR, KZ, LA, LC, LK, LR, LS, LT, LU, LV, LY, MA, MD, MG, MK, MN, MW, MX, MZ, NA, NG, NI, NO, NZ, OM, PG, PH, PL, PT, RO, RS, RU, SC, SD, SE, SG, SK, SL, SM, SY, TJ, TM, TN, TR, TT, TZ, UA, UG, US, UZ, VC, VN, ZA, ZM, ZW.

(84) Designated States *(unless otherwise indicated, for every kind of regional protection available)*: ARIPO (BW, GH, GM, KE, LS, MW, MZ, NA, SD, SL, SZ, TZ, UG, ZM,

[Continued on next page]

(54) Title: METHOD AND APPARATUS FOR CENTERING AN OPHTHALMIC LENS

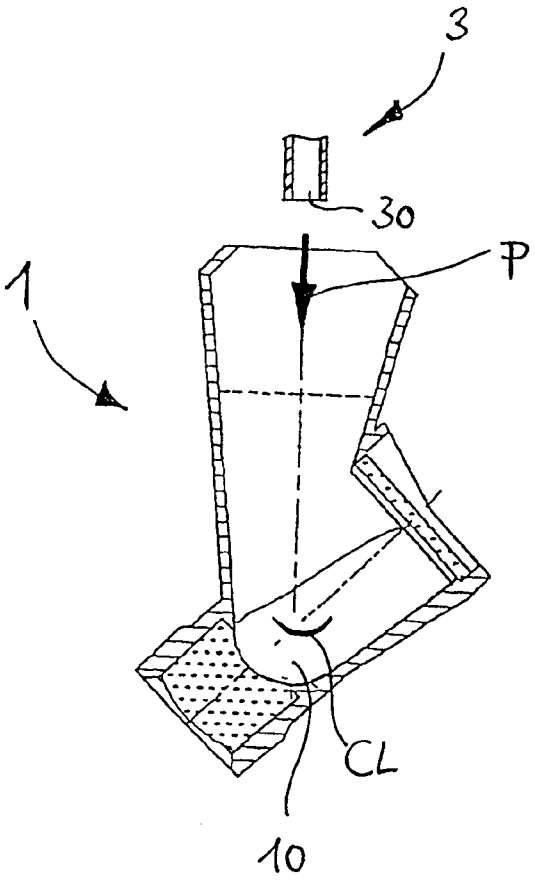

(57) Abstract: An ophthalmic lens (CL), e.g. a contact lens, is centered in a concave trough (10) of an inspection cell (1) which is filled with liquid (W). The inspection cell (10) has a channel (11) which is in communication with the concave trough (10). Centering of the ophthalmic lens is achieved by applying a pulse (P) of a fluid to the liquid (W) so as to whirl up the ophthalmic lens (CL) and by allowing the ophthalmic lens (CL) to settle down in the center of the concave trough (10).

WO 2007/017138 A1

ZW), Eurasian (AM, AZ, BY, KG, KZ, MD, RU, TJ, TM), European (AT, BE, BG, CH, CY, CZ, DE, DK, EE, ES, FI, FR, GB, GR, HU, IE, IS, IT, LT, LU, LV, MC, NL, PL, PT, RO, SE, SI, SK, TR), OAPI (BF, BJ, CF, CG, CI, CM, GA, GN, GQ, GW, ML, MR, NE, SN, TD, TG).

Declaration under Rule 4.17:

— *as to applicant's entitlement to apply for and be granted a patent (Rule 4.17(ii))*

Published:

— *with international search report*

For two-letter codes and other abbreviations, refer to the "Guidance Notes on Codes and Abbreviations" appearing at the beginning of each regular issue of the PCT Gazette.