(12) INTERNATIONAL APPLICATION PUBLISHED UNDER THE PATENT COOPERATION TREATY (PCT)

(19) World Intellectual Property Organization
International Bureau

(43) International Publication Date
25 September 2025 (25.09.2025)

WIPO | PCT

(10) International Publication Number
WO 2025/198535 A1

(51) International Patent Classification:
H01M 8/0258 (2016.01) *H01M 8/18* (2006.01)
H01M 8/026 (2016.01)

(21) International Application Number:
PCT/SG2025/050199

(22) International Filing Date:
18 March 2025 (18.03.2025)

(25) Filing Language: English

(26) Publication Language: English

(30) Priority Data:
10202400817R 21 March 2024 (21.03.2024) SG

(71) Applicant: **VFLOWTECH PTE LTD.** [SG/SG]; 8 Cleantech Loop, #06-62, Singapore 637145, Singapore 637145 (SG).

(72) Inventors: **BHATTARAI, Arjun**; 47 Choa Chu Kang Loop, #10-16 The Warren, Singapore 689680 (SG). **GHIMIRE, Purna Chandra**; 510 Jurong West Street 52, West Wood Court, Singapore 640510 (SG). **GUNDLAPALLI, Ravendra**; 6-1, Thogatapalli, Thimmapuram Village, KV, Palli Mandal, Chittoor, District, Andhra Pradesh-517235, Andra-pradesh 517235 (IN). **RANJAN, Ravi**; 36 Dover Rise, Dover Parkview, Singapore 138685 (SG).

(81) Designated States *(unless otherwise indicated, for every kind of national protection available)*: AE, AG, AL, AM, AO, AT, AU, AZ, BA, BB, BG, BH, BN, BR, BW, BY, BZ, CA, CH, CL, CN, CO, CR, CU, CV, CZ, DE, DJ, DK, DM, DO, DZ, EC, EE, EG, ES, FI, GB, GD, GE, GH, GM, GT, HN, HR, HU, ID, IL, IN, IQ, IR, IS, IT, JM, JO, JP, KE, KG, KH, KN, KP, KR, KW, KZ, LA, LC, LK, LR, LS, LU, LY, MA, MD, MG, MK, MN, MU, MW, MX, MY, MZ, NA, NG, NI, NO, NZ, OM, PA, PE, PG, PH, PL, PT, QA, RO, RS, RU, RW, SA, SC, SD, SE, SG, SK, SL, ST, SV, SY, TH, TJ, TM, TN, TR, TT, TZ, UA, UG, US, UY, UZ, VC, VN, WS, ZA, ZM, ZW.

(84) Designated States *(unless otherwise indicated, for every kind of regional protection available)*: ARIPO (BW, CV, GH, GM, KE, LR, LS, MW, MZ, NA, RW, SC, SD, SL, ST, SZ, TZ, UG, ZM, ZW), Eurasian (AM, AZ, BY, KG, KZ, RU, TJ, TM), European (AL, AT, BE, BG, CH, CY, CZ, DE, DK, EE, ES, FI, FR, GB, GR, HR, HU, IE, IS, IT, LT, LU, LV, MC, ME, MK, MT, NL, NO, PL, PT, RO, RS, SE, SI, SK, SM, TR), OAPI (BF, BJ, CF, CG, CI, CM, GA, GN, GQ, GW, KM, ML, MR, NE, SN, TD, TG).

Declarations under Rule 4.17:
— *as to the applicant's entitlement to claim the priority of the earlier application (Rule 4.17(iii))*

Published:
— *with international search report (Art. 21(3))*
— *before the expiration of the time limit for amending the claims and to be republished in the event of receipt of amendments (Rule 48.2(h))*

(54) Title: SPLIT SERPENTINE FLOW FIELD PLATE, SYSTEM AND METHOD

(57) Abstract: A split serpentine flow field plate designed to improve electrolyte distribution in flow batteries is provided The flow field plate includes an inlet port for receiving a first electrolyte, multiple inlets (first, second, third, and fourth) to distribute the electrolyte to corresponding quadrants, and a drain canal to collect reacted electrolyte from each quadrant and direct it to an outlet port. Each quadrant features a serpentine-like flow channel. The design aims to overcome limitations of traditional serpentine flow fields, such as unfavourable pressure drop and uneven electrolyte distribution, thereby enhancing the efficiency of charge-discharge cycles in flow batteries.

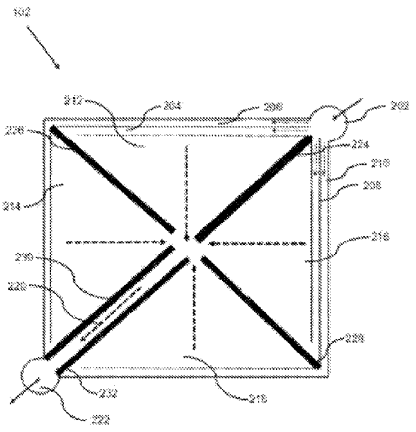

FIG. 2A

WO 2025/198535 A1