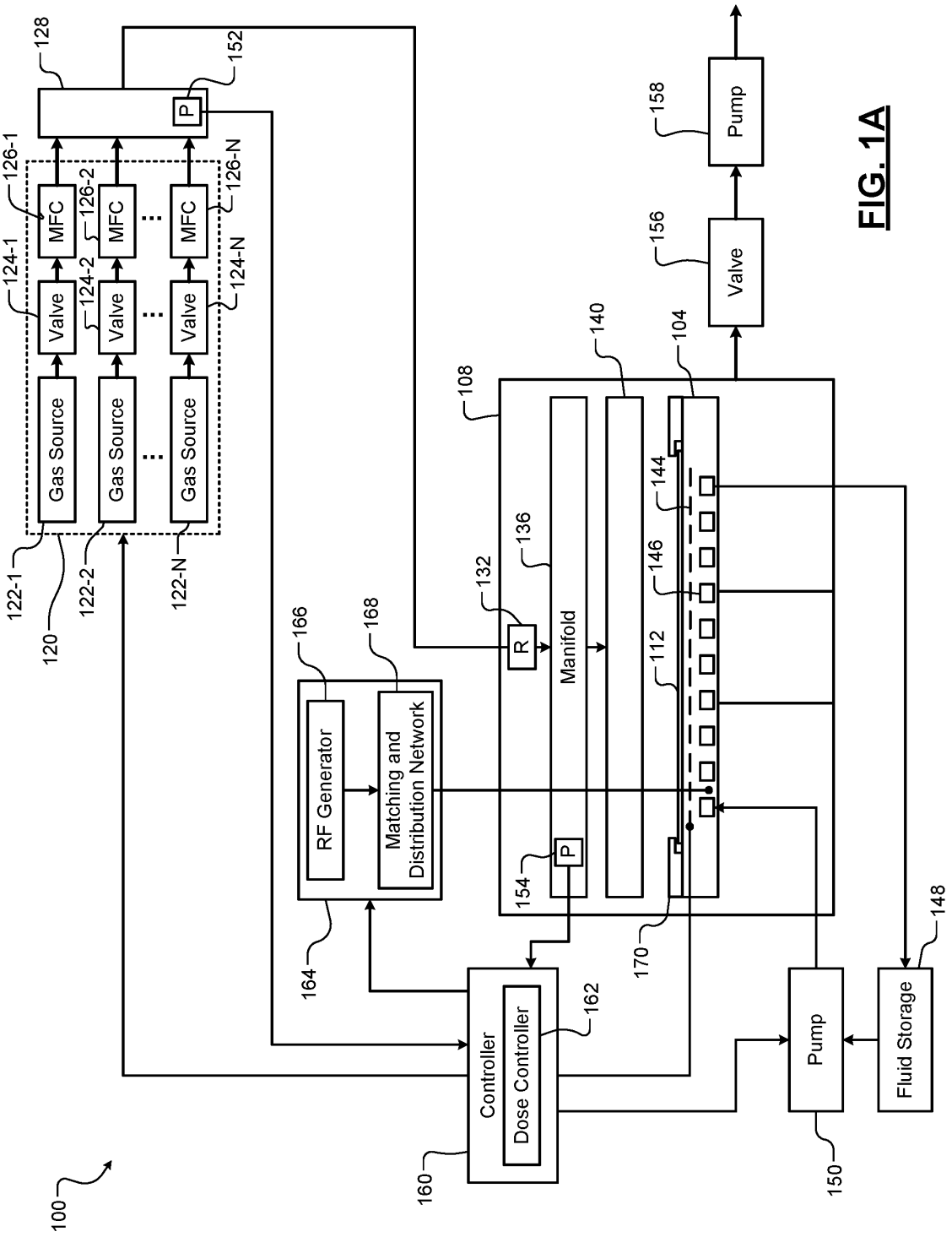
100
120
122-1
122-2
122-N
124-1
124-2
124-N
126-1
126-2
126-N
128
152
Gas Source
Valve
MFC
P
158
Pump
156
Valve
140
104
108
132
136
144
146
112
R
Manifold
166
168
RF Generator
Matching and Distribution Network
154
164
170
160
Controller
Dose Controller
162
Pump
150
Fluid Storage
148

FIG. 1A

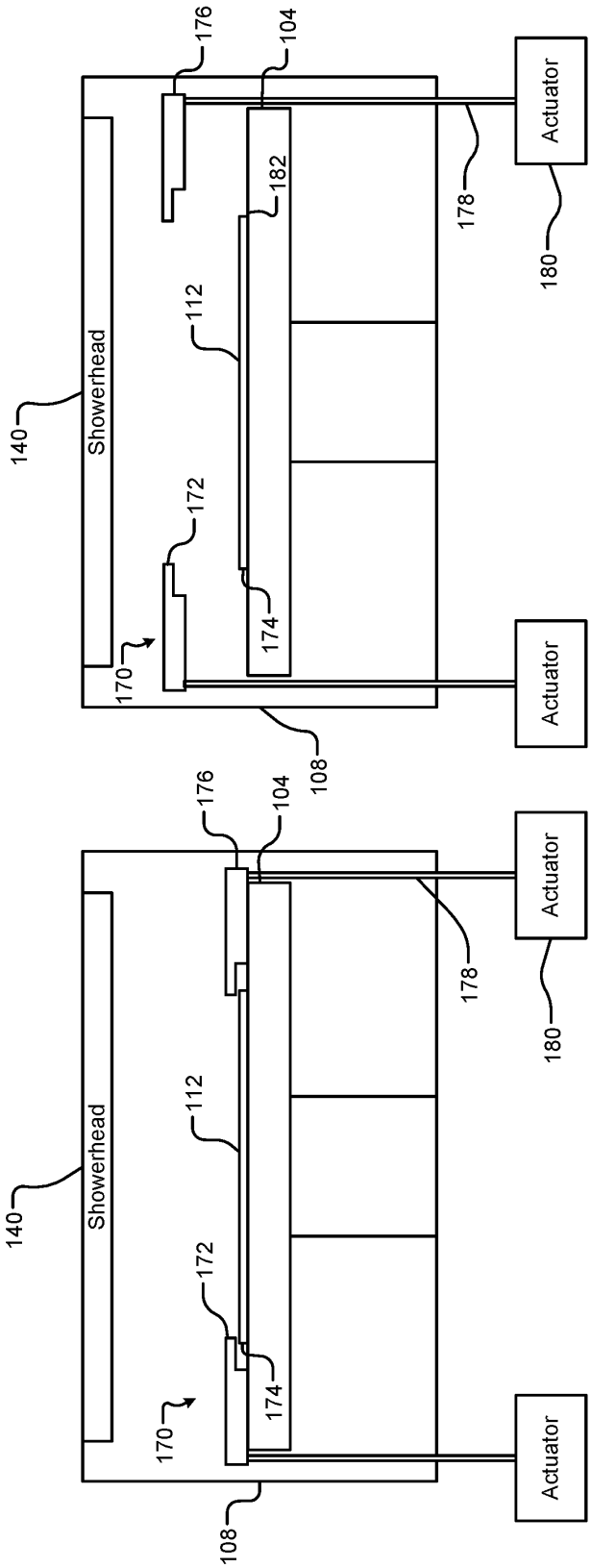

FIG. 1B

FIG. 1C

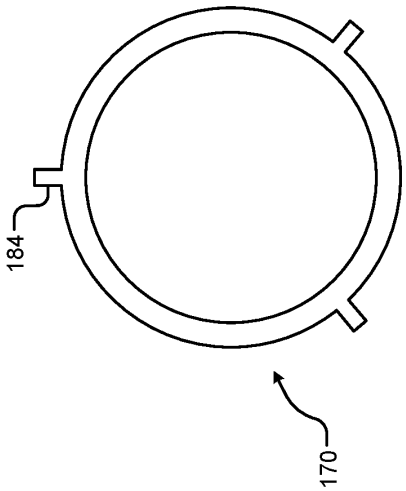

FIG. 1D

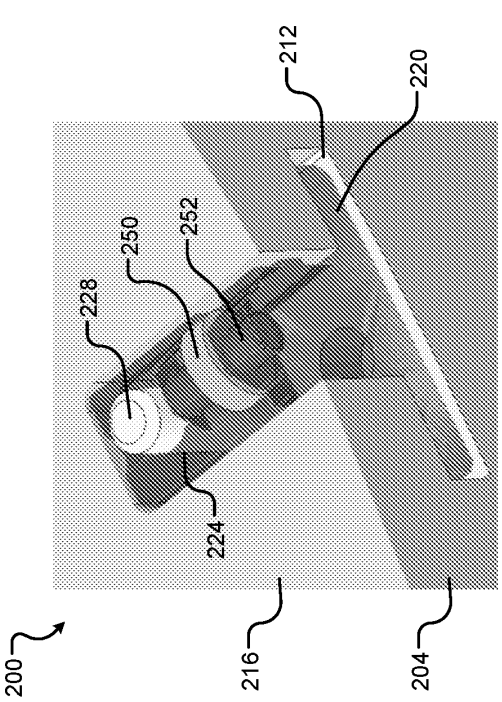

FIG. 2B

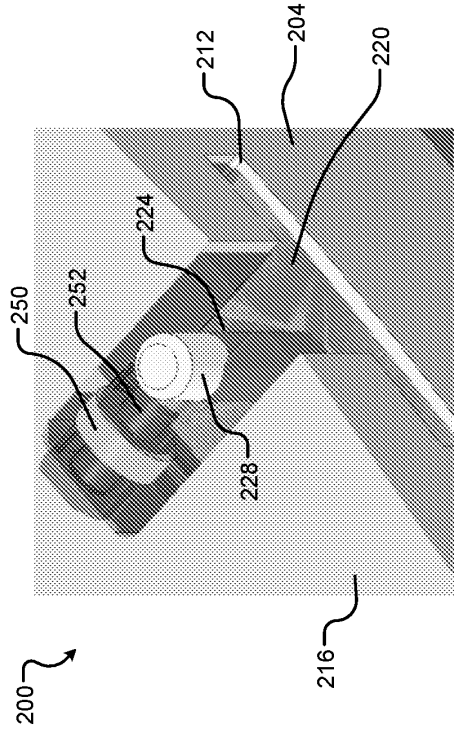

FIG. 2D

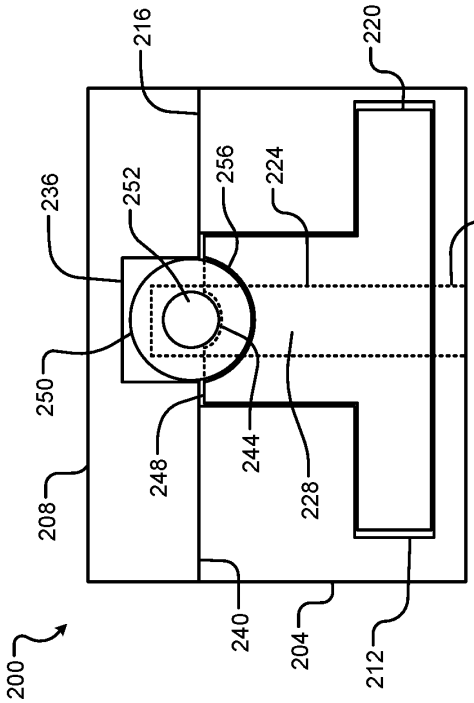

FIG. 2A

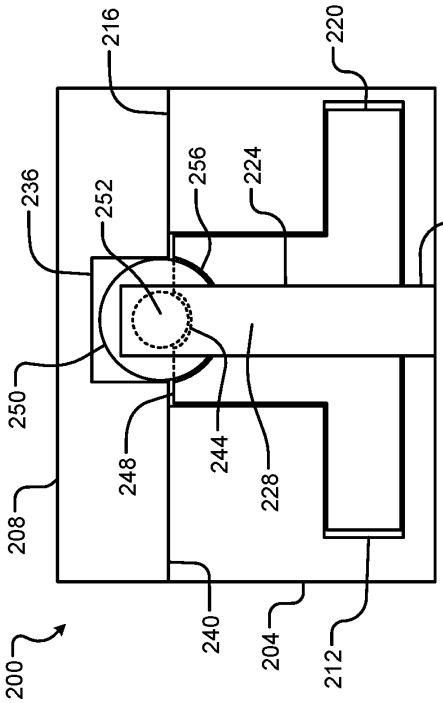

FIG. 2C

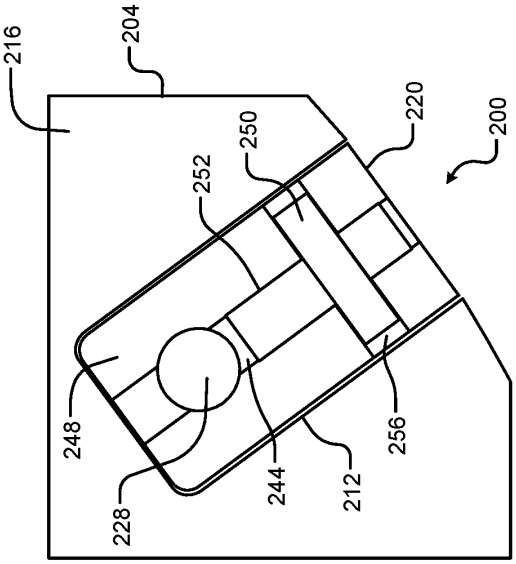

FIG. 2E

FIG. 2F

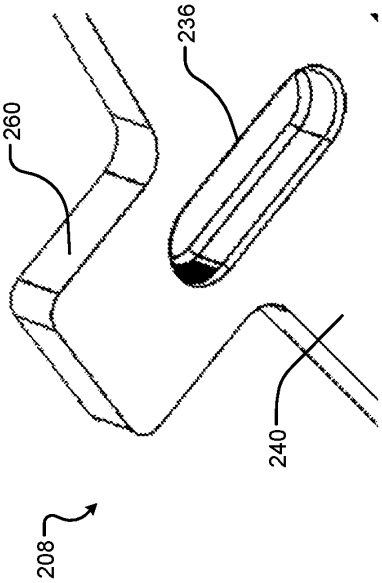

FIG. 2G

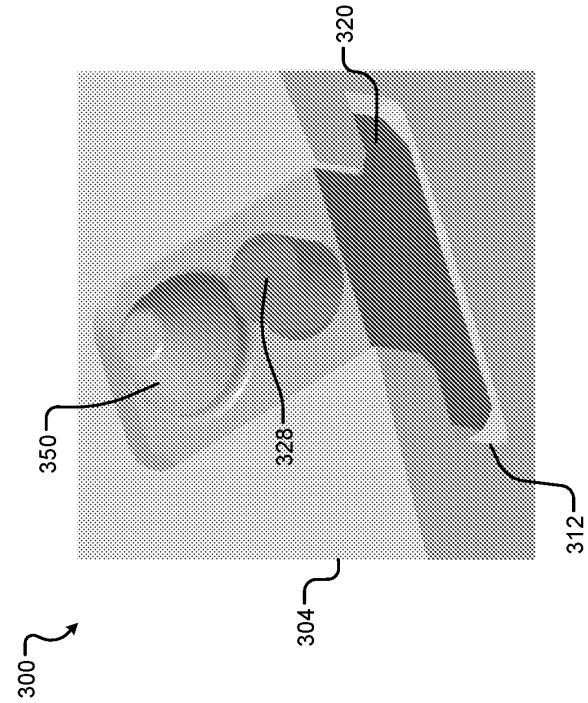

FIG. 3B

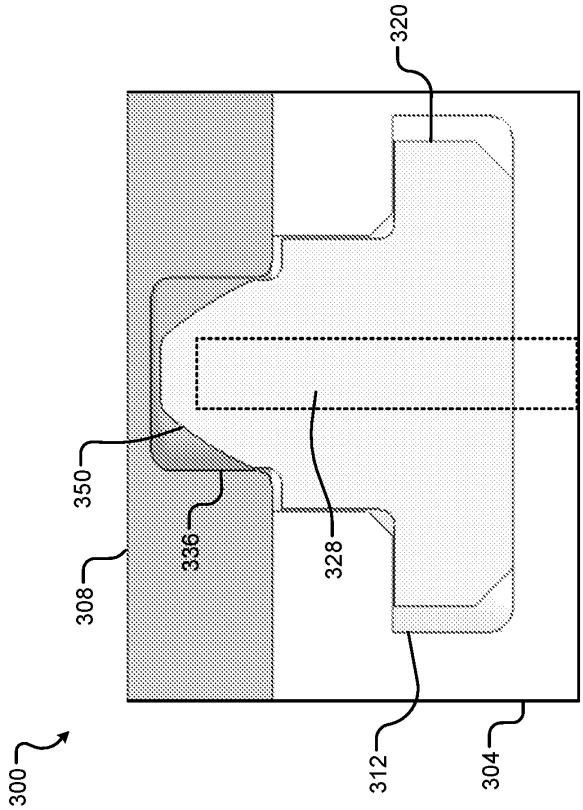

FIG. 3A

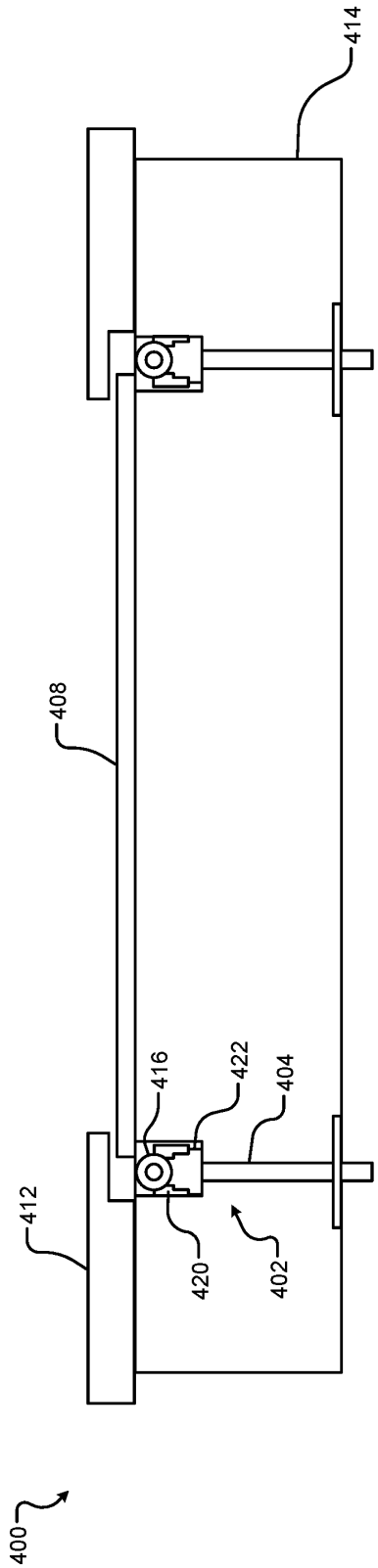

FIG. 4A

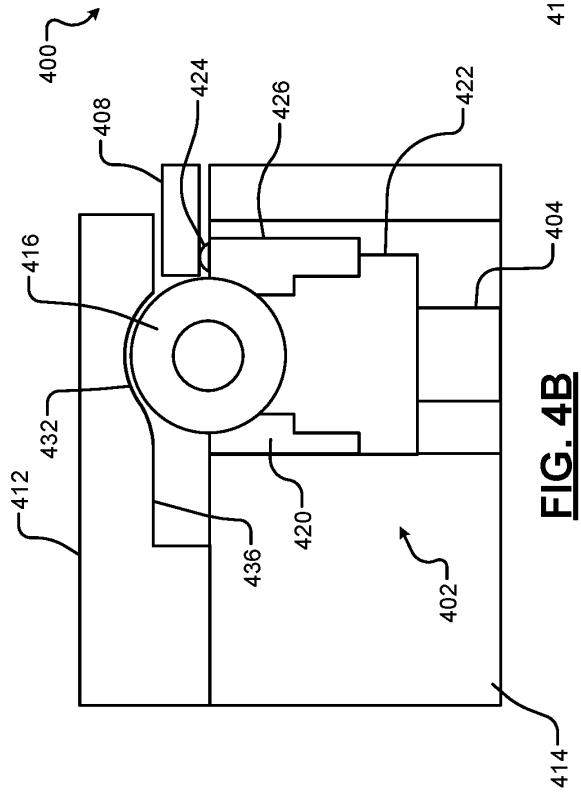

FIG. 4B

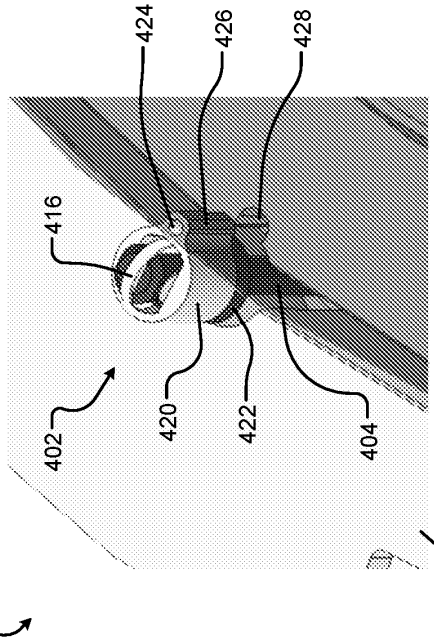

FIG. 4C

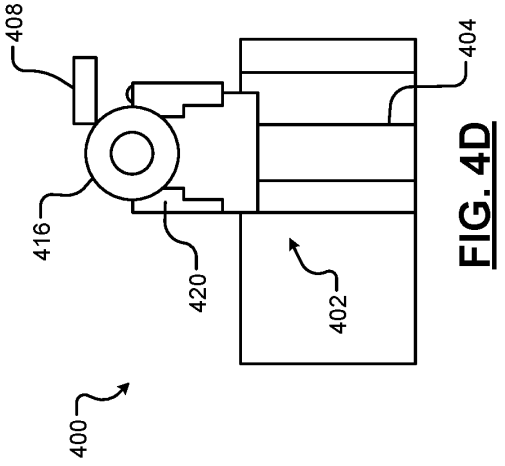

FIG. 4D

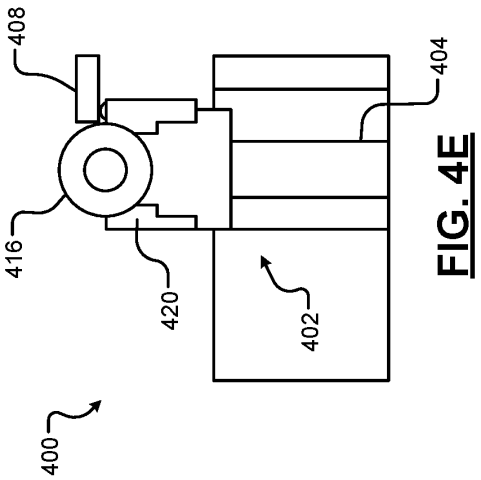

FIG. 4E

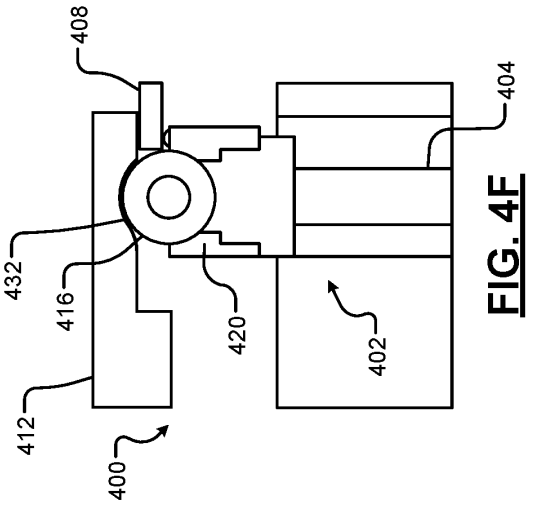

FIG. 4F

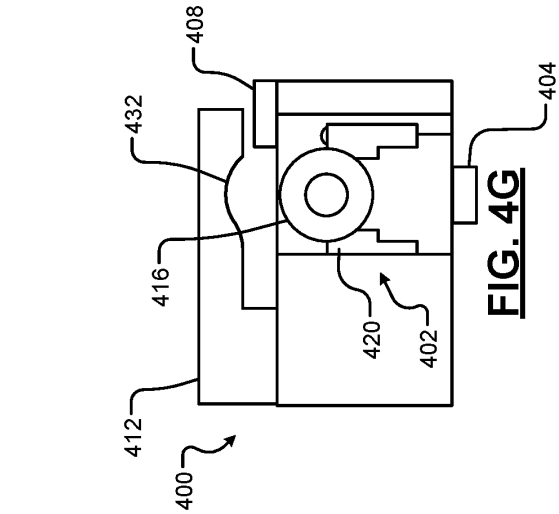

FIG. 4G

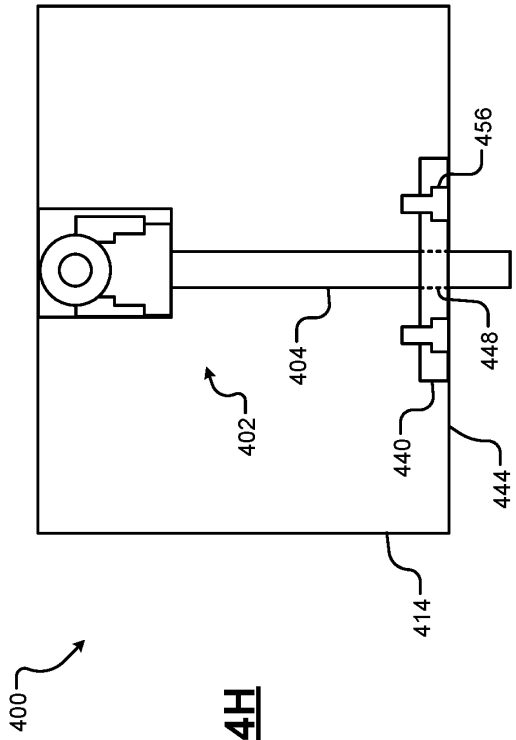

FIG. 4H

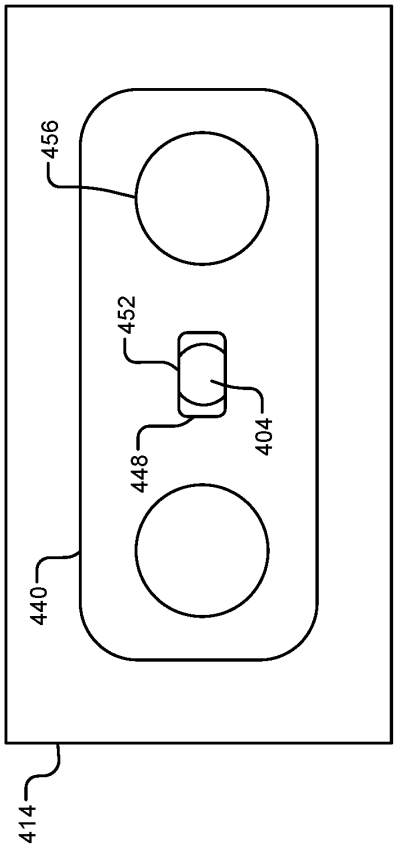

FIG. 4I

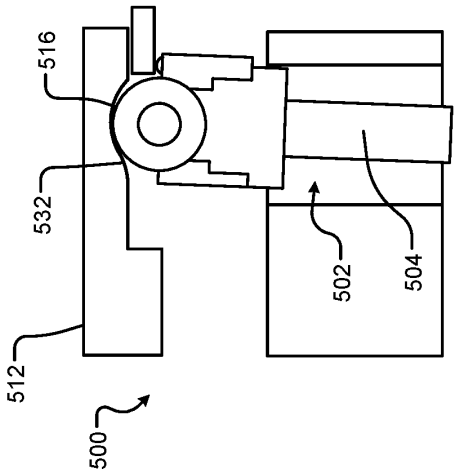

FIG. 5

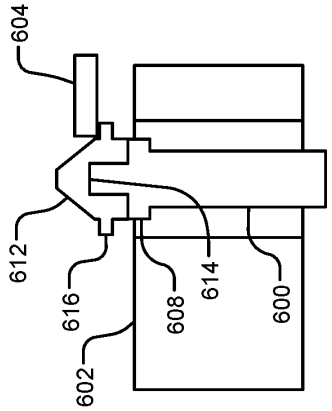

FIG. 6B

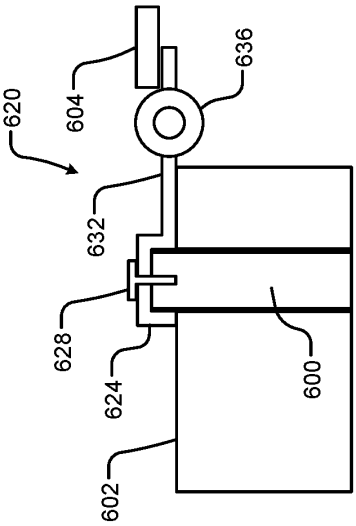

FIG. 6C

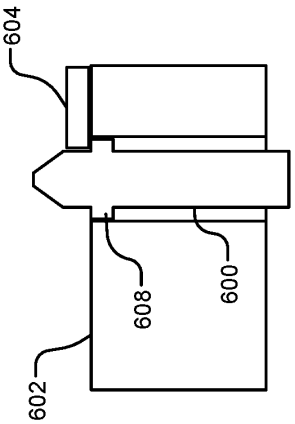

FIG. 6A